DETAIL SPECIFICATION SHEET

FITTINGS, HOSE, CRIMP TYPE, SPLIT-FLANGE, 45° BENT TUBE

This specification is approved for use by all Departments and Agencies of the Department of Defense.

The requirements for acquiring the product described herein shall consist of this specification sheet and MIL-DTL-52525.

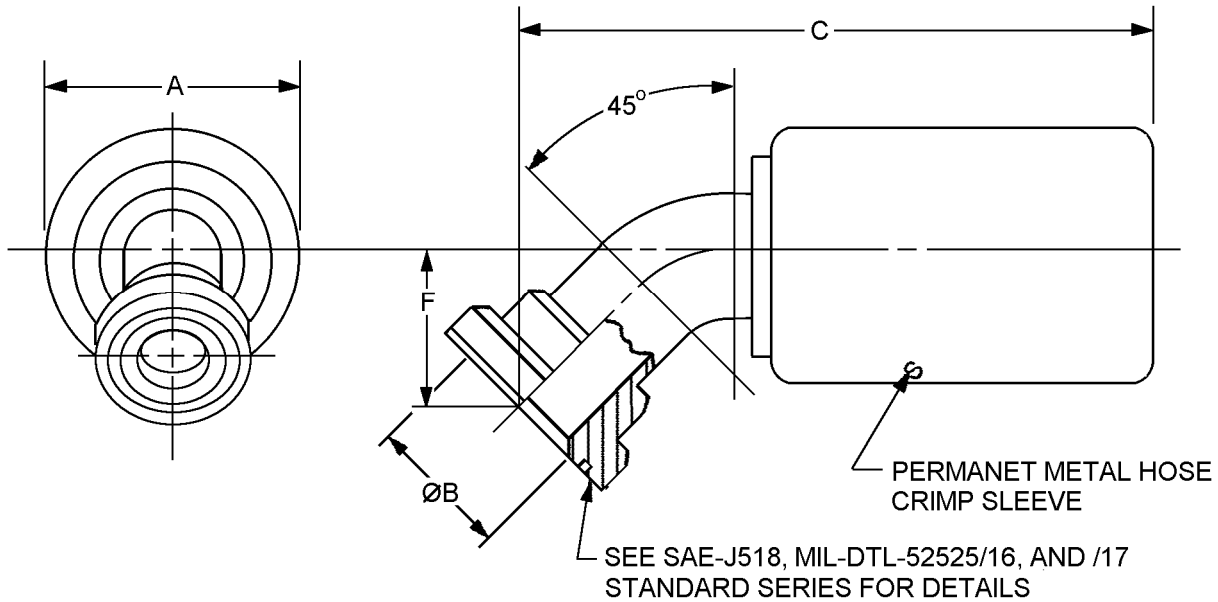

Part or Identifying Number (PIN)	Hose		Flange size		A max inch (mm)
	ID ref inches (mm)	Dash no.	inches (mm)	Dash no.	
M52525/44-16-16	1.000 (25.40)	-16	1.000 (25.40)	-16	1.75 (44.45)
M52525/44-20-20	1.250 (31.75)	-20	1.250 (31.75)	-20	2.00 (50.80)
M52525/44-24-24	1.500 (38.10)	-24	1.500 (38.10)	-24	2.40 (60.96)
M52525/44-32-32	2.000 (50.80)	-32	2.000 (50.80)	-32	2.80 (71.12)

FIGURE 1. Fitting, clamp-on to 4-bolt split-flange, 45° bent tube.

PIN	B min inches (mm)	C max inches (mm)	F max inches (mm)
M52525/24-16-16	.75 (19.05)	6.19 (157.23)	1.13 (28.70)
M52525/24-20-20	1.00 (25.40)	6.38 (162.05)	1.38 (35.05)
M52525/24-24-24	1.25 (31.75)	6.91 (175.51)	1.63 (41.40)
M52525/24-32-32	1.68 (42.67)	9.16 (232.66)	2.26 (57.40)

NOTES:
1. Dimensions are in inches.
2. Metric equivalents are given for information only.
3. All dimensions not shown shall be in accordance with SAE-J516 and SAE-J518 as applicable.

FIGURE 1. Fitting, clamp-on to 4-bolt split-flange, 45° bent tube - Continued.

ENGINEERING DATA:

SAE-J517, type 100R10 hoses have been discontinued by SAE. Suggested SAE-J517 replacement hoses are specified in table I. The “RE” designator at the end of the hose type “100RE” is a MIL-DTL-52471 term used to indicate a hose type that has been discontinued and to use an SAE-J517 replacement hose see MIL-DTL-52471/3.

The hose assembly document MIL-DTL-52471/3 is being retained so replacement parts can be ordered from this slash sheet. The intent is to allow users the ability to use PIN’s in MIL-DTL-52471/3 to order hose assemblies. Manufacturers will use the appropriate substitute hose and fittings to make a hose assembly to meet the mating requirements of the fittings listed in this slash sheet, and shall meet the performance requirements of SAE-J517, and mark it in accordance with MIL-DTL-52471/3.

TABLE I. Hose type 100R10to SAE replacement. 1/

100R10 hose dash size	SAE-J517 replacement PIN	Operating pressure psi	SAE MPa	100RE MPa
-16	SAE J517 100R13-16	4000	35	27.6
-20	SAE J517 100R12-20	3000	21	20.7
-24	SAE J517 100R12-24	2500	17.5	17.2
-32	SAE J517 100R12-32	2500	17.5	17.2

1/ If the SAE-J517 hose in table I does not meet system requirements chose an SAE-J517 hose with pressure requirements at or above pressure requirements specified in this specification.

REQUIREMENTS:

The fittings described herein are for use with MIL-DTL-52471/7, type 100RE, double wire braid hose and hose assemblies in accordance with MIL-DTL-52525/3.

Fittings shall be specified on figure 1 and in tables I and II.

If fittings are to be used on an oxygen hose, see MIL-DTL-52525.

Materials and finishes shall be in accordance with MIL-DTL-52525 and in table II.

TABLE II. Material and finish identification codes. 1/ 2/

PIN code material/plating finish	Material	Plating finish
A	Aluminum alloy 6061 or 7075	Anodize in accordance with MIL-A-8625, type II.
AN		Anodize in accordance with MIL-A-8625, type II and NAVAIR trivalent chromium pretreatment (TCP) in accordance with MIL-DTL-81706, type 2, class A.
BN		Bare aluminum with NAVAIR TCP in accordance with MIL-DTL-81706, type 2, class A.
C	Steel	Cadmium plating in accordance with SAE-AMS-C-81562, type II, class 3 or SAE-AMS-QQ-P-416, type II, class 2.
CN		Cadmium plating in accordance with SAE-AMS-C-81562, type II, class 3 or SAE-AMS-QQ-P-416, type II, class 2 and NAVAIR TCP in accordance with MIL-DTL-81706, type 2, class A.
YC	Chrome-molybdenum steel alloy 4130	Cadmium plating in accordance with SAE-AMS-C-81562, type II, class 3 or SAE-AMS-QQ-P-416, type II, class 2.
YN		Cadmium plating in accordance with SAE-AMS-C-81562, type II, class 3 or SAE-AMS-QQ-P-416, type II, class 2 and NAVAIR TCP in accordance with MIL-DTL-81706, type 2, class A.
F	Steel	NAVAIR TCP in accordance with MIL-DTL-81706, type 2, class A.
FN	Chrome-molybdenum steel alloy 4130	
G	Steel	Zinc plating with colorless passivate in accordance with ASTM B633, type V, Fe/Zn 25.
YG	Chrome-molybdenum steel alloy 4130	
H	Steel	Zinc phosphate finish in accordance MIL-DTL-16232, type Z, class1. 3/
YH	Chrome-molybdenum steel alloy 4130	
J	Steel	Zinc plating with chromate conversion in accordance with ASTM B633; type II or III, Fe/Zn 5, or ASTM B695, type II, class 5.
YJ	Chrome-molybdenum steel alloy 4130	
K	Nickel-copper alloy UNS N04400	No additional finish.
M	High-chromium nickel alloy UNS N06690	No additional finish.
N	Steel	Zinc aluminum in accordance with ASTM F1136, grade 3, NC.
YN	Chrome-molybdenum steel alloy 4130	
P	Steel	Zinc plating with colorless passivate in accordance with ASTM B633, type VI, Fe/Zn 5.
YP	Chrome-molybdenum steel alloy 4130	
S	Corrosion resistant steel	No additional finish. Passivation in accordance with SAE-AMS2700, type 6 or 7.
SN		Passivation above and NAVAIR TCP in accordance with MIL-DTL-81706, type 2, class A.
T	Titanium	Anodize in accordance with SAE-AMS2488, type 2.
V	Steel	Zinc-nickel in accordance with SAE-AMS2417, type 1.
W	Steel	Any zinc plating above.
YW	Chrome-molybdenum steel alloy 4130	
Z	Steel	Any zinc plating above with NAVAIR TCP in accordance with MIL-DTL-81706, type 2, class A.
YZ	Chrome-molybdenum steel alloy 4130	

1/ All materials and finishes shall be in accordance with MIL-DTL-52525.
2/ Embitterment test need not be run.
3/ Zinc phosphate finish is hexavalent chromium free.

The operating pressure shall be specified in table III. Maximum operating pressures are for low carbon steel fittings consult manufacturer for values on other materials.

TABLE III. Maximum operating pressures of fittings. 1/ 2/

Size dash number	Hose ID inches (mm)	psi	MPa
-16	1.000 (25.40)	4000	27.6
-20	1.250 (31.75)	3000	20.7
-24	1.500 (38.10)	2500	17.2
-32	2.000 (50.80)	2500	17.2

1/ Dimensions are in inches.
2/ Metric equivalents are given for information only.

PIN: The PIN consists of the letter “M” the specification sheet number, a dash, a number for the hose size a dash, a number for the flange size, and a material finish designator.

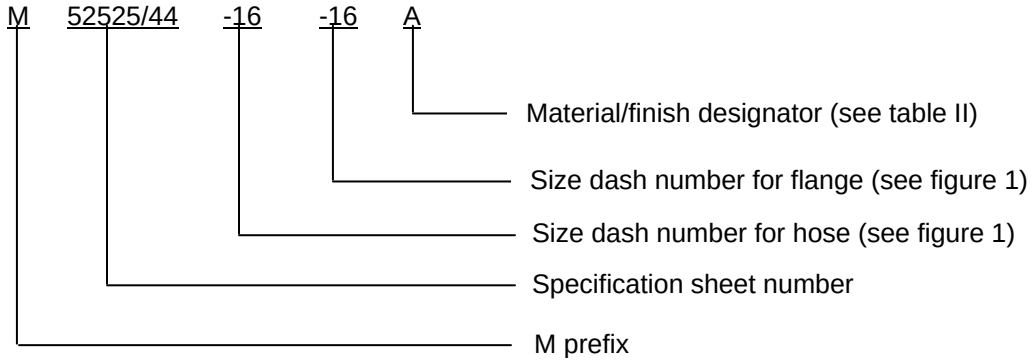

PIN example: M52525/44-16-16A, , describes a 45° bent tube crimp type split flange for a 1.000 inch (25.40 mm) hose, and with a 1.000 inch (25.40 mm) flange, aluminum with an anodized finish.

To the users of this document, it is recommended that the use of carbon steel material with cadmium plating be used only when the other materials and finishes specified in this document cannot meet performance requirements.

Color identification. Color identification shall be in accordance with SAE-AS4841.

Marking shall include the manufacturer’s name or trademark, size, and hose identifier RE. Location of marking is optional.

Harmonization to SAE-J516 cross reference PIN in table IV is for reference only. SAE-J516 style fittings may not have the same material/finish as required by MIL-DTL-52525 and legacy with MIL-DTL-52471. SAE-J517 codes for standard hoses are explained further in MIL-DTL-52471.

TABLE IV. Harmonization to SAE-J516 cross reference PIN. 1/ 2/

Replacement PIN	Superseded PIN	SAE J516 Equivalent PIN 2/	SAE J518-2 PIN Flange head only
M52525/44-16-16	M52525/24-16-16	SAE J516 16-16 P492254EE	SAE J518/2-16-0562
M52525/44-20-20	M52525/24-20-20	SAE J516 20-20 P492254EE	SAE J518/2-20-0562
M52525/44-24-24	M52525/24-24-24	SAE J516 24-24 P492254EE	SAE J518/2-24-0562
M52525/44-32-32	M52525/24-32-32	SAE J516 32-32 P492254EE	SAE J518/2-32-0562

1/ Material and finish designators are omitted from PIN's, see table I and SAE-J846.
2/ The "EE" at the end of the SAE PIN is to indicate a nonstandard part.

Changes from previous issue. Marginal notations are not used in this revision to identify changes with respect to the previous issue, due to the extent of the changes.

Referenced documents. In addition to MIL-DTL-52525, this document references the following:

MIL-A-8625
MIL-DTL-16232
MIL-DTL-52471
MIL-DTL-52471/3
MIL-DTL-52471/7
MIL-DTL-52525/3
MIL-DTL-52525/16
MIL-DTL-52525/17
MIL-DTL-81706
ASTM B633
ASTM B695
ASTM F1136
SAE-AMS-C-81562
SAE-AMS-QQ-P-416
SAE-AMS2417
SAE-AMS2488
SAE-AMS2700
SAE-AS4841
SAE-J516
SAE-J517
SAE-J518
SAE-J846

CONCLUDING MATERIAL

Custodians:
Army - AT
Air Force - 99
DLA - CC

Preparing activity:
DLA - CC

(Project 4730-2007-100)

NOTE: The activities listed above were interested in this document as of the date of this document. Since organizations and responsibilities can change, you should verify the currency of the information above using the ASSIST Online database at http://assist.daps.dla.mil.