INCH-POUND

MIL-DTL-52525/37B
1 December 2008
SUPERSEDING
MIL-DTL-52525/37A
30 June 1998

DETAIL SPECIFICATION SHEET

# FITTINGS, HOSE, SCREW-ON TO 37° FLARE FEMALE SWIVEL, STRAIGHT

This specification is approved for use by all Departments and Agencies of the Department of Defense.

The requirements for acquiring the product described herein shall consist of this specification sheet and MIL-DTL-52525.

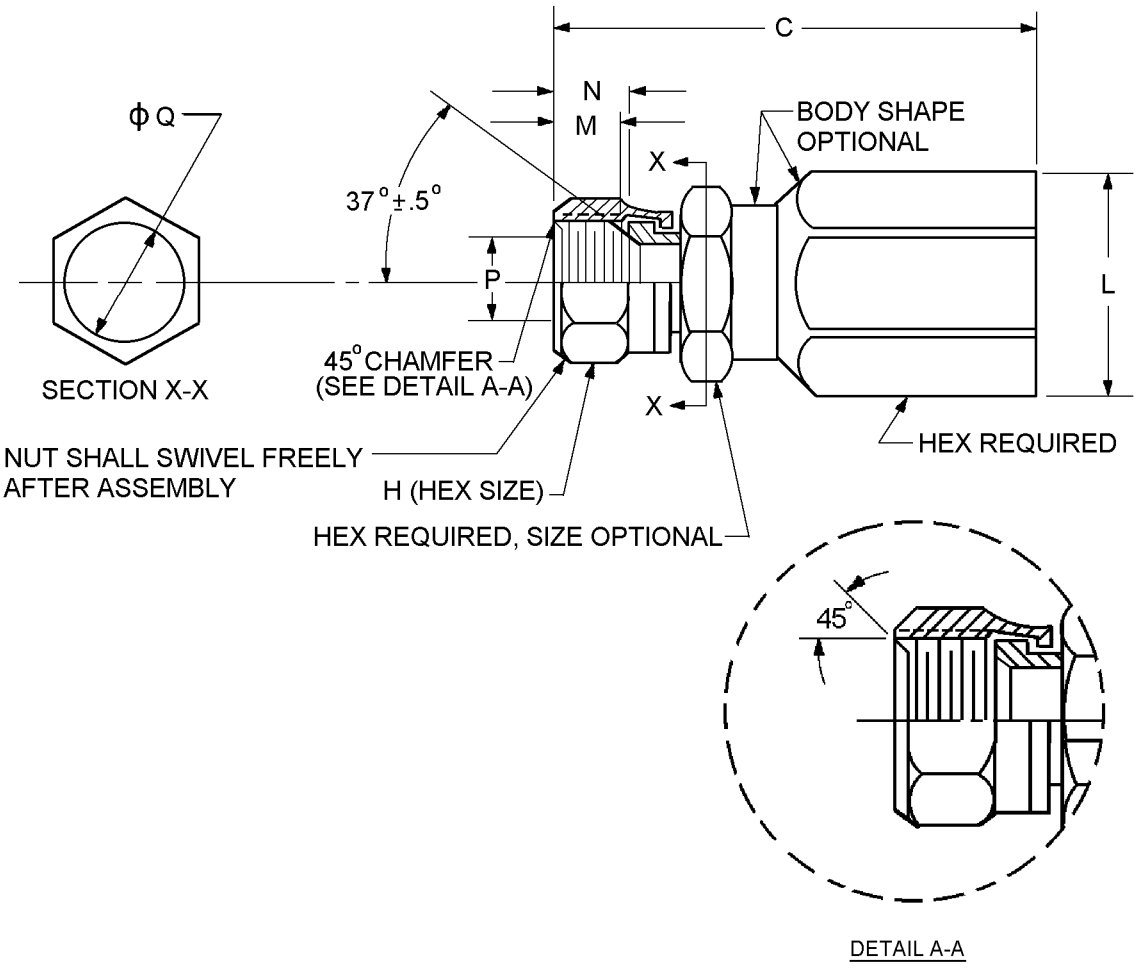


FIGURE 1. Fitting, screw-on to 37° flare female swivel, straight.

| Part or Identifying Number (PIN) | Hose ID inches (mm) | Hose OD inches (mm) | Tube OD inches (mm) | Thread size | C max inches (mm) |
|---|---|---|---|---|---|
| M52525/37-08-08 | .50 (12.70) | .94 (23.88) | .50 (12.70) | .750-16 | 3.20 (81.28) |
| M52525/37-12-12 | .75 (19.05) | 1.21 (30.73) | .75 (19.05) | 1.063-12 | 3.90 (99.06) |
| M52525/37-16-16 | 1.00 (25.40) | 1.50 (38.10) | 1.00 (25.40) | 1.313-12 | 4.50 (114.30) |

| PIN | H hex size inches (mm) | L max inches (mm) | M min inches (mm) | N inches (mm) +.030 (0.76) -.015 (0.38) | P inches (mm) (see note 3) ±.005 (0.13) |
|---|---|---|---|---|---|
| M52525/37-08-08 | .88 (22.35) | 1.29 (32.77) | .384 (9.75) | .435 (11.05) | .570 (14.48) |
| M52525/37-12-12 | 1.25 (31.75) | 1.73 (43.94) | .487 (12.37) | .562 (14.27) | .850 (21.59) |
| M52525/37-16-16 | 1.50 (38.10) | 2.02 (51.31) | .505 (12.83) | .594 (15.09) | 1.103 (28.02) |

| PIN | Q min inches (mm) |
|---|---|
| M52525/37-08-08 | .37 (9.40) |
| M52525/37-12-12 | .56 (14.22) |
| M52525/37-16-16 | .81 (20.57) |

NOTES:
1. Dimensions are in inches.
2. Metric equivalents are given for information only.
3. Dimension P to be concentric with dimension Q within .015 inch (.038 mm).
4. Method of fabrication and assembly of swivel nut is optional.

FIGURE 1. Fitting, screw-on to 37° flare female swivel, straight - Continued.

REQUIREMENTS:

The fittings described herein are for use with hose in accordance with MIL-DTL-52471/9, 4-spiral-wrap reinforcement hose, and hose assemblies in accordance with MIL-DTL-52471/10, type 100R12.

The fittings shall be as specified on figure 1 and in tables I, II, and III.

If fittings are to be used on an oxygen hose, see MIL-DTL-52525.

Materials and finishes shall be in accordance with MIL-DTL-52525 and in table I. All finishes shall be capable of withstanding 96 hours minimum of salt spray.

TABLE I. Material and finish identification codes. 1/ 2/

| PIN code material/plating finish | Material | Plating finish |
|---|---|---|
| A | Aluminum alloy 6061 or 7075 | Anodize in accordance with MIL-A-8625, type II. |
| AN | | Anodize in accordance with MIL-A-8625, type II and NAVAIR trivalent chromium pretreatment (TCP) in accordance with MIL-DTL-81706, type 2, class A. |
| BN | | Bare aluminum with NAVAIR TCP in accordance with MIL-DTL-81706, type 2, class A. |
| C | Steel | Cadmium plating in accordance with SAE-AMS-C-81562, type II, class 3 or SAE-AMS-QQ-P-416, type II, class 2. |
| CN | | Cadmium plating in accordance with SAE-AMS-C-81562, type II, class 3 or SAE-AMS-QQ-P-416, type II, class 2 and NAVAIR TCP in accordance with MIL-DTL-81706, type 2, class A. |
| YC | Chrome-molybdenum steel alloy 4130 | Cadmium plating in accordance with SAE-AMS-C-81562, type II, class 3 or SAE-AMS-QQ-P-416, type II, class 2. |
| YN | | Cadmium plating in accordance with SAE-AMS-C-81562, type II, class 3 or SAE-AMS-QQ-P-416, type II, class 2 and NAVAIR TCP in accordance with MIL-DTL-81706, type 2, class A. |
| F | Steel | NAVAIR TCP in accordance with MIL-DTL-81706, type 2, class A. |
| FN | Chrome-molybdenum steel alloy 4130 | |
| G | Steel | Zinc plating with colorless passivate in accordance with ASTM B633, type V, Fe/Zn 25. |
| YG | Chrome-molybdenum steel alloy 4130 | |
| H | Steel | Zinc phosphate finish in accordance MIL-DTL-16232, type Z, class1. 3/ |
| YH | Chrome-molybdenum steel alloy 4130 | |
| J | Steel | Zinc plating with chromate conversion in accordance with ASTM B633; type II or III, Fe/Zn 5, or ASTM B695, type II, class 5. |
| YJ | Chrome-molybdenum steel alloy 4130 | |
| K | Nickel-copper alloy UNS N04400 | No additional finish. |
| M | High-chromium nickel alloy UNS N06690 | No additional finish. |
| N | Steel | Zinc aluminum in accordance with ASTM F1136, grade 3, NC. |
| YN | Chrome-molybdenum steel alloy 4130 | |
| P | Steel | Zinc plating with colorless passivate in accordance with ASTM B633, type VI, Fe/Zn 5. |
| YP | Chrome-molybdenum steel alloy 4130 | |
| S | Corrosion resistant steel | No additional finish. Passivation in accordance with SAE-AMS2700, type 6 or 7. |
| SN | | Passivation above and NAVAIR TCP in accordance with MIL-DTL-81706, type 2, class A. |
| T | Titanium | Anodize in accordance with SAE-AMS2488, type 2. |
| V | Steel | Zinc-nickel in accordance with SAE-AMS2417, type 1. |
| W | Steel | Any zinc plating above. |
| YW | Chrome-molybdenum steel alloy 4130 | |
| Z | Steel | Any zinc plating above with NAVAIR TCP in accordance with MIL-DTL-81706, type 2, class A. |
| YZ | Chrome-molybdenum steel alloy 4130 | |

1/ All materials and finishes shall be in accordance with MIL-DTL-52525.
2/ Embitterment test need not be run.
3/ Zinc phosphate finish is hexavalent chromium free.

The operating pressure shall be as specified in table II. Maximum operating pressures are for low carbon steel fittings consult manufacturer for values on other materials.

TABLE II. Maximum operating pressures of fittings. 1/ 2/

| SAE dash size | Hose ID inches (mm) | psi | MPa |
|---|---|---|---|
| -08 | .50 (12.70) | 5000 | 34.5 |
| -12 | .75 (19.05) | 4000 | 27.6 |
| -16 | 1.00 (25.40) | 4000 | 27.6 |

1/ Dimensions are in inches.
2/ Metric equivalents are given for information only.

Over tightening torque shall be as specified in table III. Over tightening torque values are for low carbon steel fittings consult manufacturer for values on other materials.

TABLE III. Over-tightening torque for swivel nut. 1/ 2/

| SAE dash size | Tube OD inches (mm) | Torque | |
|---|---|---|---|
| | | Pound force foot(lbf-ft) | N m |
| -08 | .50 (12.70) | 37.5 | 50.8 |
| -12 | .75 (19.05) | 75 | 101.7 |
| -16 | 1.00 (25.40) | 100 | 135.6 |

1/ Dimensions are in inches.
2/ Metric equivalents are given for information only.

PIN: The PIN consists of the letter “M” the specification sheet number, a dash, a number for the hose size a dash, a number for flange size, and a material finish designator.

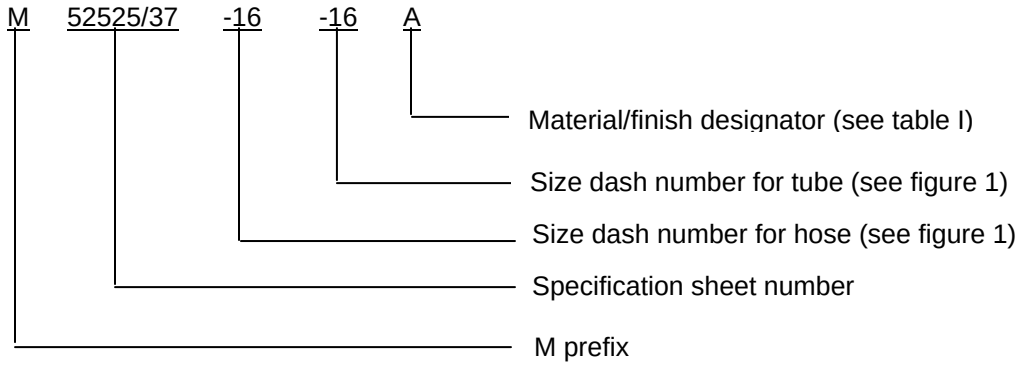


PIN example: M52525/37-16-16A, describes a screw-on to 37° flare female swivel, for a 1.00 inch (25.40 mm) hose to a 1.00 inch (25.40 mm) tube, aluminum with an anodized finish.

To the users of this document, it is recommended that the use of carbon steel material with cadmium plating be used only when the other materials and finishes specified in this document cannot meet performance requirements.

Color identification. Color identification shall be in accordance with SAE-AS4841.

Marking shall include the manufacturer’s name or trademark, size, and hose identifier 100R12. Location of marking is optional.

Harmonization to SAE-J516 cross reference PIN in table IV is for reference only. SAE-J516 style fittings may not have the same material/finish as required by MIL-DTL-52525 and legacy with MIL-DTL-52471.

TABLE IV. Harmonization to SAE-J516 cross reference PIN. 1/

| PIN | SAE PIN |
|---|---|
| M52525/37-08-08 | SAE J516 8-8 F240177 |
| M52525/37-12-12 | SAE J516 12-12 F240177 |
| M52525/37-16-16 | SAE J516 16-16 F240177 |

1/ Material and finish designators are omitted from PIN's, see table I and SAE-J846.

Changes from previous issue. Marginal notations are not used in this revision to identify changes with respect to the previous issue, due to the extent of the changes.

Referenced documents. In addition to MIL-DTL-52525, this document references the following:

| | | |
|---|---|---|
| MIL-A-8625 | ASTM B633 | SAE-AMS2488 |
| MIL-DTL-16232 | ASTM B695 | SAE-AMS2700 |
| MIL-DTL-52471 | ASTM F1136 | SAE-AS4841 |
| MIL-DTL-52471/9 | SAE-AMS-C-81562 | SAE-J516 |
| MIL-DTL-52471/10 | SAE-AMS-QQ-P-416 | SAE-J846 |
| MIL-DTL-81706 | SAE-AMS2417 | |

CONCLUDING MATERIAL

Custodians:
Army - AT
Navy - SH
Air Force - 99
DLA - CC

Review activities:
Army - CR4
Navy - AS, CG, MC, SA, YD

Preparing activity:
DLA - CC

(Project 4730-2007-093)

NOTE: The activities listed above were interested in this document as of the date of this document. Since organizations and responsibilities can change, you should verify the currency of the information above using the ASSIST Online database at http://assist.daps.dla.mil.