INCH-POUND

MS27228B
14 May 2007
SUPERSEDING
MS27228A
22 September 2000

DETAIL SPECIFICATION SHEET

FLANGE ASSEMBLY 90°, ADAPTER, HOSE TO TUBE, REUSABLE, HYDRAULIC, FUEL AND OIL LINES

This specification is approved for use by all Departments and Agencies of the Department of Defense.

The requirements for acquiring the product described herein shall consist of this specification sheet and MIL-DTL-5070.

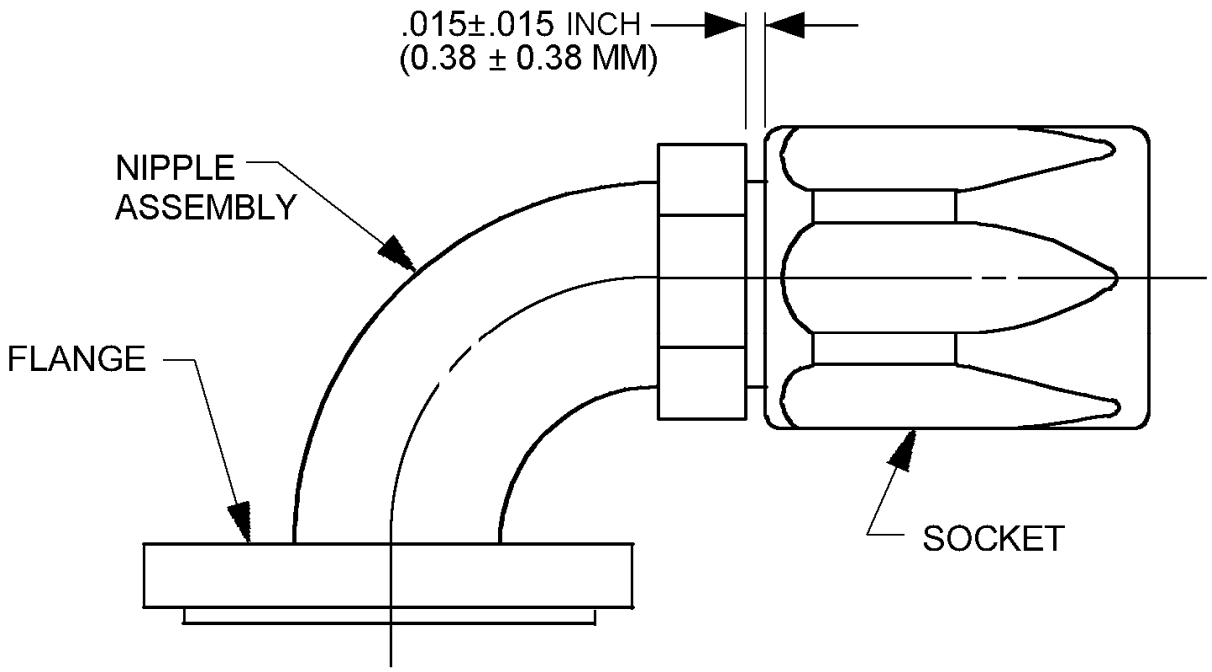

FIGURE 1. 90° flange assembly dimensions and configuration.

Dash number (see note 3)	Flange PIN (see note 4)	Nipple assembly PIN	Socket PIN
	MS20756	MS27227	MS24590
-8	-8	-8	-8
-10	-10	-10	-10
-12	-12	-12	-12
			MS24591
-16	-16	-16	-16
-20	-20	-20	-20
-24	-24	-24	-24
-32	-32	-32	-32
-40	-40	-40	-40
-48	-48	-48	-48

NOTES:
1. Dimensions are in inches.
2. Metric equivalents are given for information only.
3. All components of this assembly shall be aluminum alloys only.
4. Part or Identifying Number (PIN)

FIGURE 1. 90° flange assembly dimensions and configuration - Continued.

REQUIREMENTS:

Dimensions and configurations: The design, construction, and physical dimensions shall be in accordance with MIL-DTL-5070 and figure 1 in case of conflict between this drawing and MIL-DTL-5070, this drawing shall govern.

Intended use. This assembly is designed for use only with hose conforming to MIL-DTL-8794. This assembly is intended for use only in fuel and oil lines.

Material: Aluminum shall be in accordance with MIL-DTL-5070.

Finish: Finish shall be in accordance with MIL-DTL-5070.

Color identification: Color identification shall be accordance with MIL-DTL-5070.

PIN example:

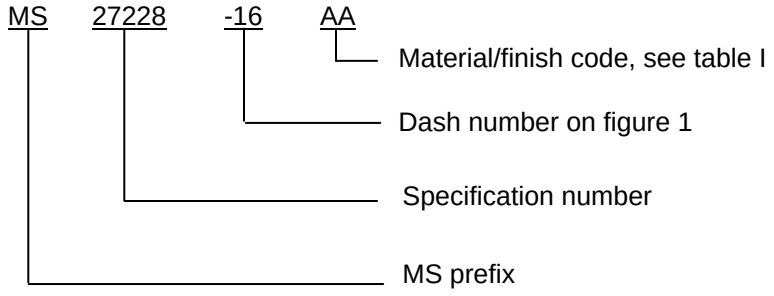

TABLE I. Code for material and finish.

Code	Dash size	Material/finish
AA	-8 through -48	Aluminum – anodic coating

Identification of product. The PIN and the manufacturer's Commercial and Government Entity (CAGE) Code or trademark shall be marked on a removable tag securely attached to the assembly.

Changes from previous issue. Marginal notations are not used in this revision to identify changes with respect to the previous issue, due to the extent of the changes.

Referenced documents. In addition to MIL-DTL-5070, this document references the following:

MIL-DTL-8794
MS20756
MS24590
MS24591
MS27227

CONCLUDING MATERIAL

Custodians:
Army - AT
Navy - AS
Air Force - 99
DLA - CC

Review activities:
Army - AV
Navy - MC, SA
Air Force - 11, 71

Preparing activity:
DLA - CC

(Project 4730-2005-047)

NOTE: The activities listed above were interested in this document as of the date of this document. Since organizations and responsibilities can change, you should verify the currency of the information above using the ASSIST Online database at http://assist.daps.dla.mil.