INCH-POUND

MIL-DTL-3954/11B
18 February 2015
SUPERSEDING
MIL-D-3954/11A
29 May 1974

MILITARY SPECIFICATION SHEET

DUMMY LOADS, ELECTRICAL, WAVEGUIDE
(FREQUENCY RANGE 7.05 TO 10.0 GIGAHERTZ)

This specification is approved for use by all Departments and Agencies of the Department of Defense.

The complete requirements for procuring the product described herein shall consist of this specification sheet and MIL-DTL-3954.

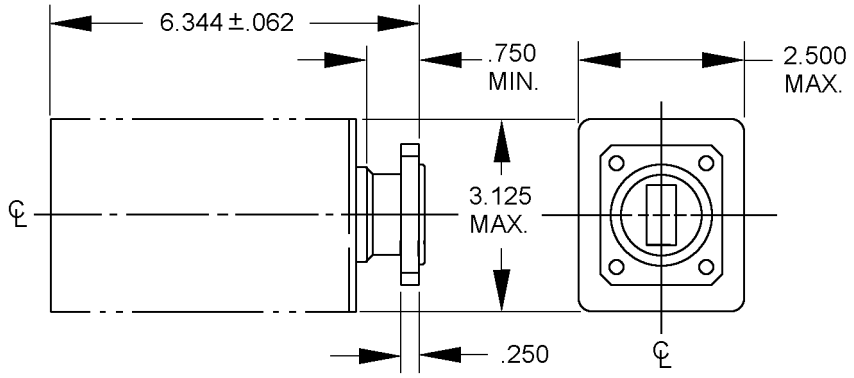

Inches	mm
.062	1.57
.250	6.35
.750	19.05
2.500	63.50
3.125	79.38
6.344	161.14

NOTES
1. Dimensions are in inches.
2. Unless otherwise specified, tolerance is ± .005 (.13 mm).
3. Metric equivalents (to the nearest .01 mm) are given for general information only.
4. Screws, lockwashers and gasket are supplied with mating flange.
5. Quantity of fins required will be dependent on heat level requirement of the load.

FIGURE 1. Class 1 dummy load.

AMSC N/A

FSC 5985

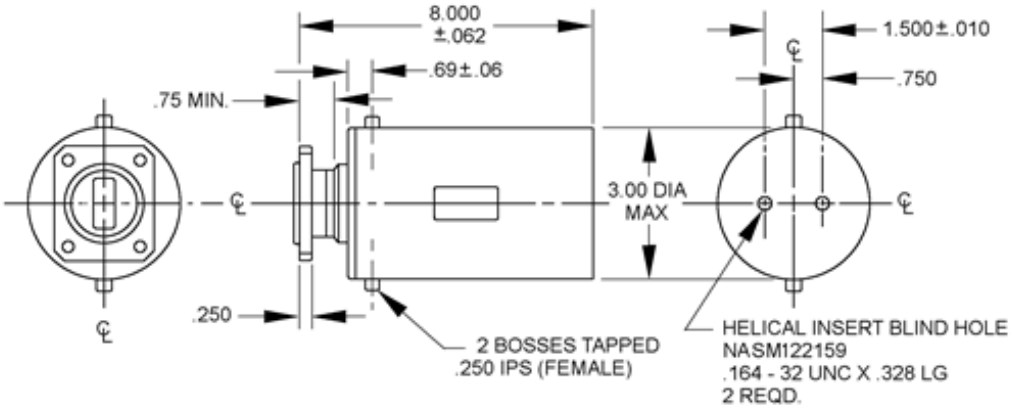

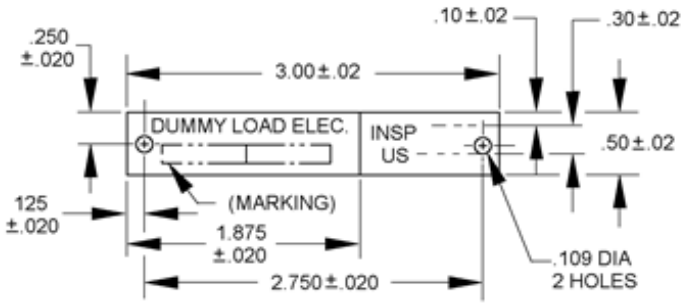

IDENTIFICATION PLATE

Inches	mm
.010	.25
.02	.51
.06	1.52
.062	1.57
.10	2.54
.109	2.77
.125	3.18
.164	4.17
.250	6.35
.30	7.62
.328	8.33
.50	12.70
.69	17.53
.75	19.05
1.500	38.10
1.875	47.63
2.750	69.85
3.00	76.20
8.00	203.20

NOTES
1. Dimensions are in inches.
2. Unless otherwise specified, tolerance is ± .005 (.13 mm).
3. Metric equivalents (to the nearest .01 mm) are given for general information only.
4. Screws, lockwashers and gasket are supplied with mating flange.

FIGURE 2. Class II dummy load.

TABLE I. Characteristics.

PIN	Class	Material	Flange equal to 2/	VSWR max	Power		Pressure		Figure	Flow rate	Input temp.	Output temp.
					Average	Peak	Internal	Coolant chamber				
					(watts)	(kilowatts)	(psig)	(psig)		(GPM 1/)	(°C)	(°C)
M3954/11-01	I	AL	M3922/53-004 (UG-138/U)	1.10	3/ 500	460	30	--	1			
M3954/11-02	II	AL	M3922/53-004 (UG-138/U)	1.10	1500	460	30	100	2	0.5	35	60
M3954/11-03	II	Copper	M3922/53-002 (UG-51/U)	1.10	1500	460	30	100	2	0.5	35	60
M3954/11-04	II	Corrosion resisting steel	M3922/53-002 (UG-51/U)	1.10	1500	460	30	100	2	0.5	35	60

1/ The flow rate was determined from the following formula:

$$Q = \frac{6.8P}{Cp\,\Delta T}$$

Where: Q = Minimum flow rate in GPM
P = Avg power in kilowatts
Cp = Specific heat of coolant.
ΔT = Coolant temperature rise in °F.

The calculations were made for Cp = 1 for water, a ΔT of 45°F and a safety factor of approximately 2. For different coolants of different temperature rises, a different flow rate would be necessary.

2/ Except thickness.

3/ This is a test power value. The average rated power is 600 watts.

TABLE II. Cross reference PIN/ AN nomenclature.

PIN	AN nomenclature
M3954/11-01	DA-148

REQUIREMENTS:

Design and construction
Dimensions and configuration: See figures 1 and 2.
Weight:
Dry loads – 1.6 lbs max.
Liquid cooled load – 4.2 lbs max.

Performance characteristics: See table I.

Part or Identifying Number (PIN): M3954/11 – (dash number from table I).

Referenced documents. This document references MIL-DTL-3954.

Changes from previous issue. Marginal notations are not used in this revision to identify changes with respect to the previous issue due to the extent of the changes.

CONCLUDING MATERIAL

Custodians:
Army – CR
Navy – EC
Air Force – 85
DLA - CC

Review activities:
Army – AR, MI
Navy – AS, CG, MC, OS, SH
Air Force – 19, 99

Preparing activity:
DLA - CC

(Project 5985-2015-003)

NOTE: The activities listed above were interested in this document as of the date of this document. Since organizations and responsibilities can change, you should verify the currency of the information above using the ASSIST Online database at https://assist.dla.mil.