INCH-POUND
MS27783D
18 April 2011

SUPERSEDING
MS27783C
28 September 1987

DETAIL SPECIFICATION SHEET

# SWITCH, TOGGLE, FOUR POLE, ENVIRONMENTALLY SEALED, LEVER LOCK, INTEGRATED WIRE TERMINALS

This specification is approved for use by all Departments and Agencies of the Department of Defense.

The complete requirements for acquiring the switch described herein shall consist of this specification and the latest issue of MIL-DTL-3950.

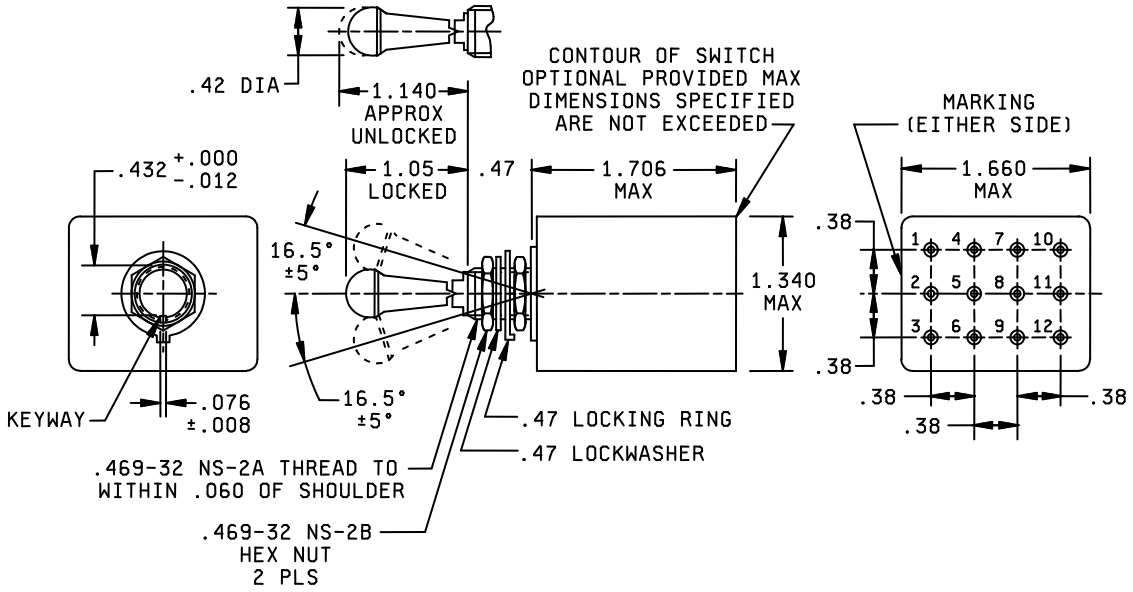


FIGURE1. Dimensions and configuration

| Inches | mm | Inches | mm |
|---|---|---|---|
| .005 | 0.13 | .432 | 10.97 |
| .008 | 0.20 | .469 | 11.91 |
| .012 | 0.30 | .47 | 11.9 |
| .020 | 0.51 | 1.05 | 26.7 |
| .060 | 1.52 | 1.140 | 28.96 |
| .076 | 1.93 | 1.340 | 34.04 |
| .38 | 9.7 | 1.660 | 42.16 |
| .42 | 10.7 | 1.706 | 43.33 |

NOTES:

1. Dimensions are inches. Metric equivalents are given for general information only.
2. Unless otherwise specified, tolerance is ± .020 (0.51 mm) for two place decimals and ± .005 (0.13 mm) for three place decimals.
3. For hardware detail specifications see appendix of MIL-DTL-3950.
4. Contact installing/ removal tool in accordance with MIL-I-81969/14-03.
5. Grommet sealing plug, in accordance with MS27488-A16.
6. Terminal shall adequately accept a wire contact within dimensional limits of SAE-AS39029/1-102.
7. Part number example: MS27783-21A (locking combination ‘A’).
8. In the event of a conflict between the text of this standard and the reference cited herein, the text of this standard shall take precedence.

FIGURE1. Dimensions and configuration Continued

REQUIREMENTS

Sealing plugs may be used in nonfunctional grommet holes.

Sealing grommet shall seal on a smooth wore insulation of .06 (1.73 mm) to 1.03 (2.62 MM) diameters

The terminal end of switch shall be color coded blue to indicate contact size

Direction of internal mechanism movement is opposite to the direction of the toggle movement

Maximum weight is .227 pound.

The locking means at the top of the toggle bushing shall be capable of withstanding a torque of 20 inch-pounds applied in both directions immediately following the humidity test.

Locking arrangement Positive locking shall be accomplished and shall prevent motion of the toggle lever until the locking mechanism shall be 3 to 5 pounds

Direction of internal mechanism movement is opposite to the direction of the toggle movement.

Electrical rating: See table I.

LOCKING COMBINATIONS

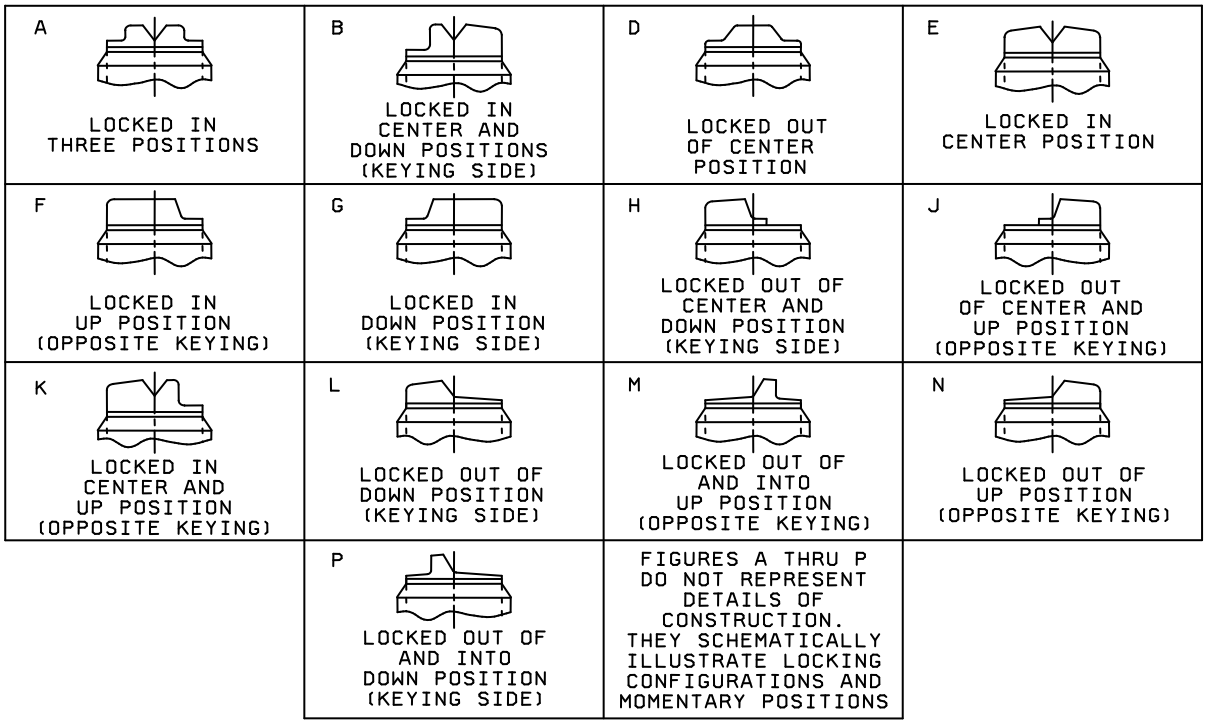


FIGURE 2 Locking Combinations.

TABLE I Detail Requirements

| MS Part number | Available locking combinations | Circuit with toggle lever in | | | Current capacity (amperes) 28 volts dc | | | Current capacity (amperes) 115 volts, 60 and 400 hertz ac | | |
|---|---|---|---|---|---|---|---|---|---|---|
| | | Keying side | Center | Opposite keying side | Lamp-load circuit | Resistive circuit | Inductive circuit | Lamp-load circuit | Resistive circuit | Inductive circuit |
| MS27783-1 | ALL | 1-2 4-5<br>7-8 ON 10-11 | 2-3 4-5<br>7-8 ON 11-12 | 2-3 5-6<br>8-9 ON 11-12 | 5 | 20 | 12 | 4 | 15 | 15 |
| MS27783-2 | E,F,K,L,M,N | 1-2 MOM 4-5<br>7-8 ON 10-11 | 2-3 4-5<br>7-8 ON 11-12 | 2-3 5-6<br>8-9 ON 11-12 | 4 | 18 | 10 | 2 | 11 | 8 |
| MS27783-3 | E,L,N | 1-2 MOM 4-5<br>7-8 ON 10-11 | 2-3 4-5<br>7-8 ON 11-12 | 2-3 MOM 5-6<br>8-9 ON 11-12 | | | | | | |
| MS27783-21 | ALL | 1-2 7-8<br>4-5 ON 10-11 | OFF | 2-3 8-9<br>5-6 ON 11-12 | 5 | 20 | 12 | 4 | 15 | 15 |
| MS27783-22 | D,F,G | OFF | NONE | 2-3 8-9<br>5-6 ON 11-12 | | | | | | |
| MS27783-23 | D,F,G | 1-2 7-8<br>4-5 ON 10-11 | NONE | 2-3 8-9<br>5-6 ON 11-12 | | | | | | |
| MS27783-24 | E,F,K,M | NONE | OFF | 2-3 8-9<br>5-6 ON 11-12 | | | | | | |
| MS27783-25 | F | NONE | MOM. OFF | 2-3 8-9<br>5-6 ON 11-12 | 4 | 18 | 10 | 2 | 11 | 8 |
| MS27783-26 | F | 1-2 MOM 7-8<br>4-5 ON 10-11 | NONE | 2-3 8-9<br>5-6 ON 11-12 | | | | | | |
| MS27783-27 | E,L,N | 1-2 MOM 7-8<br>4-5 ON 10-11 | OFF | 2-3 MOM 8-9<br>5-6 ON 11-12 | | | | | | |
| MS27783-28 | E | 1-2 MOM 7-8<br>4-5 ON 10-11 | OFF | NONE | | | | | | |
| MS27783-29 | F | MOM OFF | NONE | 2-3 8-9<br>5-6 ON 11-12 | | | | | | |
| MS27783-30 | F | 1-2 MOM 7-8<br>4-5 ON 10-11 | NONE | OFF | | | | | | |
| MS27783-31 | E,F,K,L,M,N | 1-2 MOM 7-8<br>4-5 ON 10-11 | OFF | 2-3 8-9<br>5-6 ON 11-12 | | | | | | |
| MS27783-32 | E | NONE | 1-2 7-8<br>4-5 ON 10-11 | 2-3 MOM 8-9<br>5-6 ON 11-12 | | | | | | |
| MS27783-33 | E,F,K,M | NONE | 1-2 7-8<br>4-5 ON 10-11 | 2-3 8-9<br>5-6 ON 11-12 | 5 | 20 | 12 | 4 | 15 | 15 |

Test Requirements

Test shall be performed in accordance with MIL-DTL-3950 except

a) During all tests. Switches shall be fully wired with appropriate wire and terminal contacts.
b) Contact voltage drop- the contact drop with two terminals and the switch contact in series shall not exceed 8 millivolts measured from one wire contact through the contacts to the other wire contacts.

Referenced documents
MIL-DTL-3950

Marginal notations are not used in this revision to identify changes with respect to the previous issue due to the extent of the changes.

Custodians:
Army – CR
Navy – AS
Air Force – 85
DLA – CC

Preparing activity
DLA – CC

(Project 5930-2011-064)

Review activities
Army – AR, AV, MI
Navy – EC, MC
Air Force – 99

NOTE: The activities listed above were interested in this document as of the date of this document. Since organizations and responsibilities can change, you should verify the currency of the information above using the ASSIST Online database at https://assist.daps.dla.mil/ .