INCH-POUND
MS24525K
18 April 2011

SUPERSEDING
MS24525J
28 September 1987

DETAIL SPECIFICATION SHEET

SWITCH, TOGGLE, FOUR POLE, ENVIRONMENTALLY SEALED

This specification is approved for use by all Departments and Agencies of the Department of Defense.

The complete requirements for acquiring the switch described herein shall consist of this specification and the latest issue of MIL-DTL-3950.

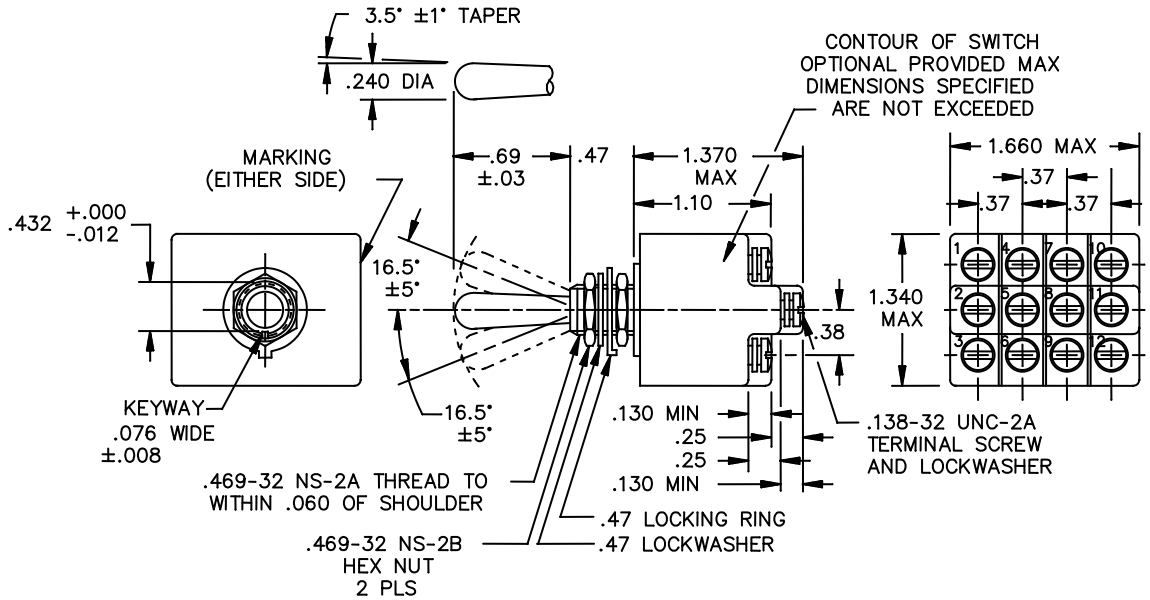

FIGURE1. Dimensions and configuration

Inches	mm	Inches	mm
.005	0.13	.25	6.4
.008	0.20	.37	9.4
.012	0.30	.38	9.7
.02	0.5	.432	10.97
.03	0.8	.469	11.91
.060	1.52	.47	11.9
.076	1.93	.69	17.5
.130	3.30	1.10	27.9
.138	3.51	1.340	34.04
.240	6.10	1.370	34.80
		1.660	42.16

NOTES:

1. Dimensions are inches.
2. Metric equivalents are given for general information only.
3. Unless otherwise specified, tolerance is ± .020 (0.51 mm) for two place decimals and ± .005 (0.13 mm) for three place decimals.
4. For hardware and terminal screw detail specifications, see appendix of MIL-DTL-3950.
5. In event of a conflict between the text of this standard and the reference cited herein, the text of this standard shall take precedence.

FIGURE1. Dimensions and configuration Continued

REQUIREMENTS

All switches on this standard are designed so that the movement of the switch mechanism is opposite to that of the toggle lever

Maximum weight is .20 pound.

Thread length and hole depth should be such that screws will not bottom when tightened.

Electrical rating: See table I.

TABLE I Detail Requirements.

MS Part No.	Circuit with Toggle Lever In			Current capacity (amperes) 28 volts DC			Current capacity(amperes) 115 volts, 60 and 400 Hertz AC		
	Keying side	Center	Opposite keying side	Lamp-Load circuit	Resistive circuit	Inductive circuit	Lamp-Load circuit	Resistive circuit	Inductive circuit
MS24525-21	1-2 7-8 4-5 On 10-11	Off	2-3 8-9 5-6 On 11-12	5	20	12	4	15	15
MS24525-22	Off	None	2-3 8-9 5-6 On 11-12						
MS24525-23	1-2 7-8 4-5 On 10-11	None	2-3 8-9 5-6 On 11-12						
MS24525-24	None	Off	2-3 8-9 5-6 On 11-12						
MS24525-25	None	Mom. Off	2-3 8-9 5-6 On 11-12	4	18	10	2	11	8
MS24525-26	1-2 Mom. 7-8 4-5 On 10-11	None	2-3 8-9 5-6 On 11-12						
MS24525-27	1-2 Mom. 7-8 4-5 On 10-11	Off	2-3 Mom 8-9 5-6. On 11-12						
MS24525-28	1-2 Mom. 7-8 4-5 On 10-11	Off	None						
MS24525-29	Mom. Off	None	2-3 8-9 5-6. On 11-12						
MS24525-30	1-2 Mom. 7-8 4-5 On 10-11	None	Off						
MS24525-31	1-2 Mom. 7-8 4-5 On 10-11	Off	2-3 8-9 5-6 On 11-12						
MS24525-32	None	1-2 7-8 4-5 On 10-11	2-3 Mom 8-9 5-6 On 11-12						
MS24525-33	None	1-2 7-8 4-5 On 10-11	2-3 8-9 5-6 On 11-12	5	20	12	4	15	15

Referenced documents
MIL-DTL-3950

Marginal notations are not used in this revision to identify changes with respect to the previous issue due to the extent of the changes.

Custodians:
Army – CR
Navy – AS
Air Force – 85
DLA – CC

Preparing activity
DLA – CC

(Project 5930-2011-046)

Review activities
Army – AR, AV, MI
Navy – EC, MC
Air Force – 99

NOTE: The activities listed above were interested in this document as of the date of this document. Since organizations and responsibilities can change, you should verify the currency of the information above using the ASSIST Online database at https://assist.daps.dla.mil/ .