INCH-POUND
MIL-DTL-3950/16A
22 April 2008

SUPERSEDING
MIL-DTL-3950/16
w/AMENDMENT 4
19 June 2007

DETAIL SPECIFICATION SHEET

SWITCHES, TOGGLE, THREE POLE, 4 AMPERES, LOW LEVEL, ENVIRONMENTALLY SEALED

This specification is approved for use by all Departments and Agencies of the Department of Defense.

The requirements for acquiring the switches described herein shall consist of this specification sheet and MIL-DTL-3950.

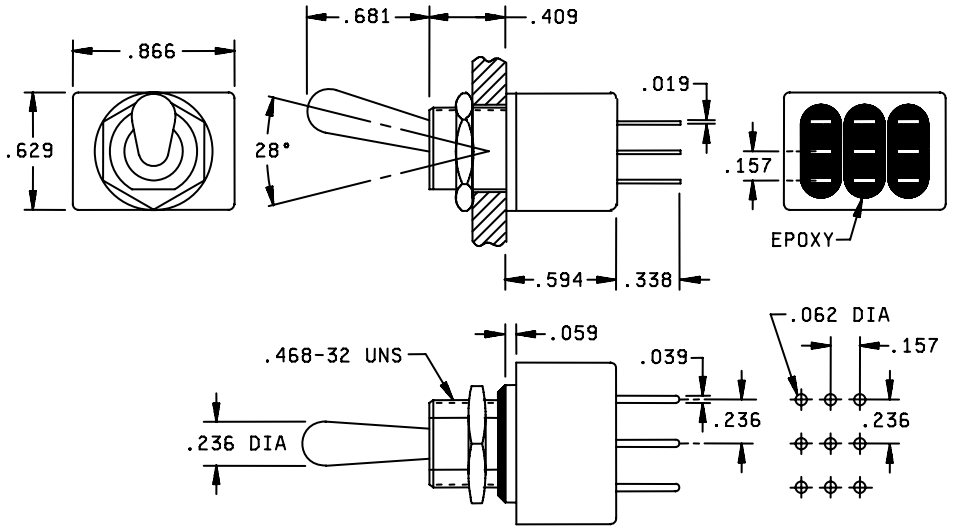

FIGURE 1. PC Terminals.

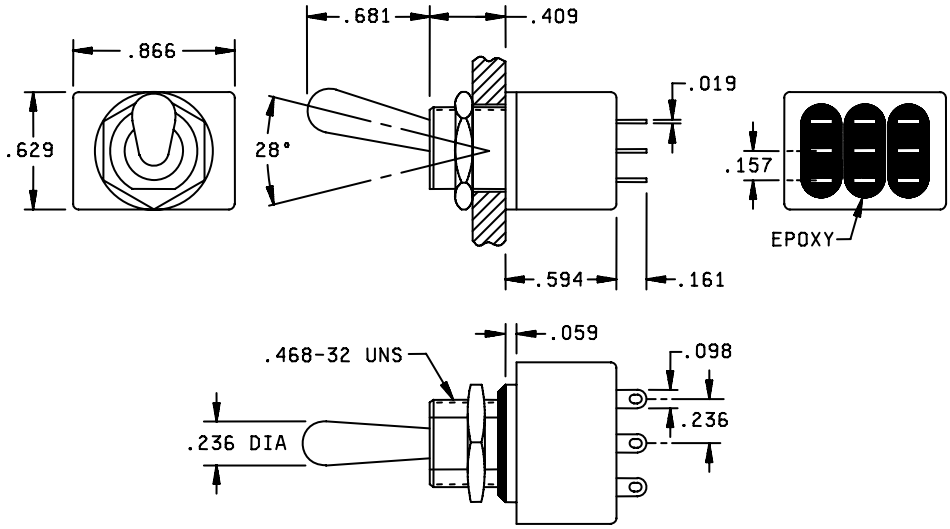

FIGURE 2. Solder Lug Terminals.

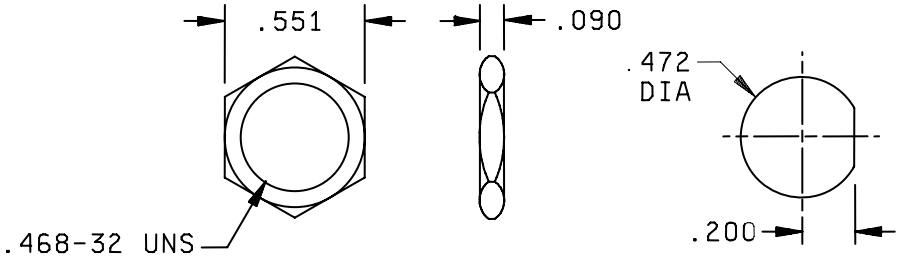

FIGURE 3. Standard Hardware and Panel Cut-out.

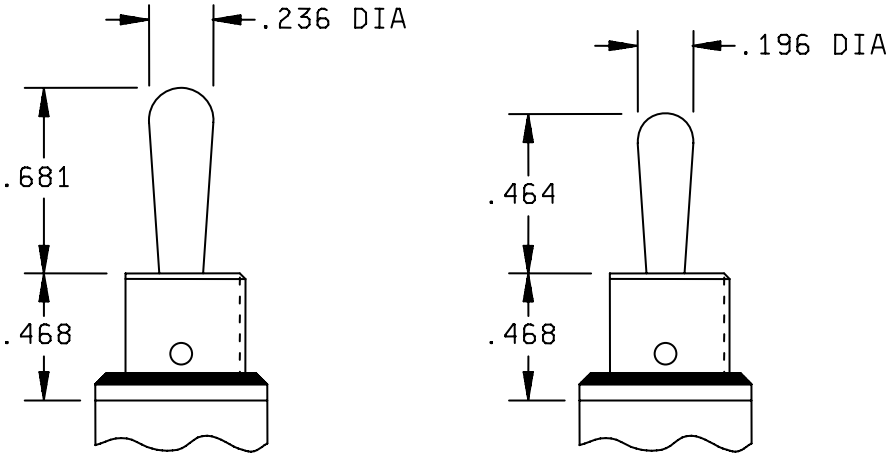

FIGURE 4. Standard and Short Levers Lengths.

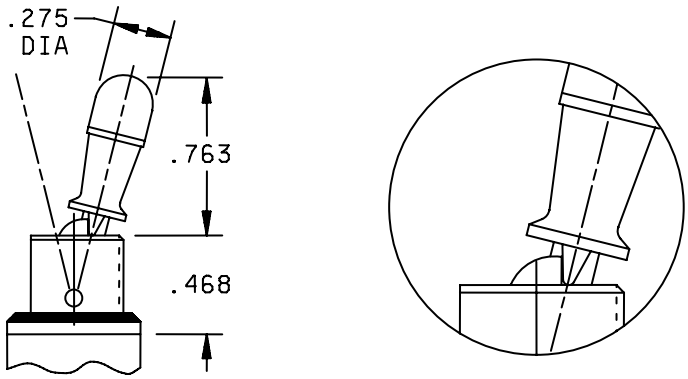

1 Locked Position

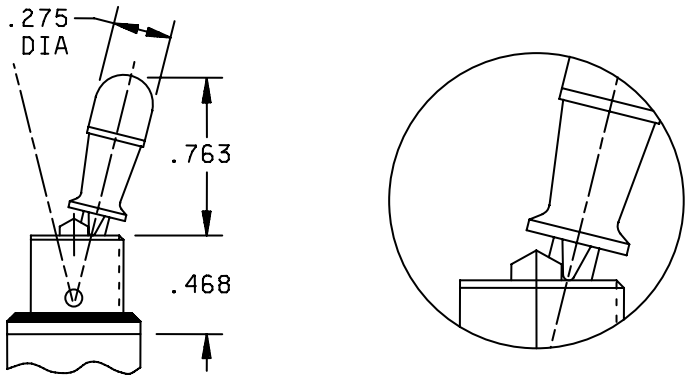

2 Locked Positions

FIGURE 5. Locking Levers.

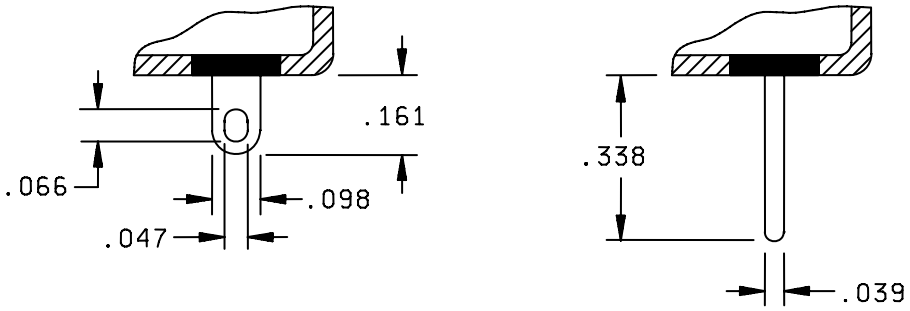

FIGURE 6. Terminal Dimensions

REQUIREMENTS:

Temperature characteristic: -40°C to +85°C.

Shock type: (50 g's sine wave) method 213, test condition A, MIL-STD-202.

Sinusoidal vibration grade: 1 (10 to 500 Hz).

Operating characteristics:

Enclosure Design: 3 (watertight).

Finish: Shall be corrosion resistant, black and lusterless.

Dielectric withstanding voltage:

Sea level: 1,000 V rms between terminals
2,000 V rms between poles
2,000 V rms between terminals and frame

Electrical endurance:
At 2A, 250VAC or 4A, 28VDC: 10,000 cycles.
At low level (50mV, 10mA): 20,000 cycles

Electrical ratings: (Maximum current/voltage rating with resistive load)

2A/250 VAC, 4A/125 VAC, or 4A/28 VDC

Contact bounce: 2ms max.

Sand and dust: Applicable.

Low level circuit: Applicable.

Qualification: Inspection table of MIL-DTL-3950

Inductive Load: Not Applicable.

Lamp Load: Not Applicable.

Seal: Sea level only.

Military Part or Identifying Number (PIN): The PIN shall consist of the prefix M3950/16, followed in order by the appropriate numeric designator for terminal style and plunger length.

M 3950/16- X X X X XX

Military designation

Specification sheet number

Terminals
1 – Solder Lug Terminals
2 – PC Terminals

Electrical Function
See Table I

Momentary
A – Non-Momentary
D – Momentary

Fluorescent Tip
0 – None
1 – White tip to lever

Levers
10 – Standard
12 – Short Lever
1V – 1 Locked Position
2V – 2 Locked Positions
3V – 3 Locked Positions

Example: M3950/16-26A02V, PC Terminals, ON - ON, No Tip, 2 Locked Position Lever.

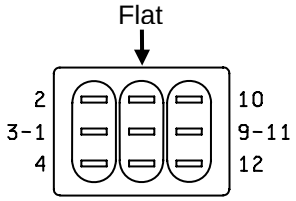

FIGURE 7. Terminal Identification

TABLE I. Lever Positions and Connections

Function	I	II	III (Flat)
6	ON (1-3)-4 (5-7)-8 (9-11)-12	-	ON (1-3)-2 (5-7)-6 (9-11)-10
7 8 9	MOM ON ON 1-2 4-5 7-8	OFF OFF OFF	MOM MOM ON 1-3 4-6 7-9

The margins of this specification are marked with vertical lines to indicate where modifications from this amendment were made. This was done as a convenience only and the Government assumes no liability whatsoever for any inaccuracies in these notations. Bidders and contractors are cautioned to evaluate the requirements of this document based on the entire content irrespective of the marginal notations.

Referenced Documents:
MIL-DTL-3950
MIL-STD-202

Custodians:
Navy – EC
DLA – CC

Preparing activity:
DLA - CC

(Project 5930-2008-077)

NOTE: The activities listed above were interested in this document as of the date of this document. Since organizations and responsibilities can change, you should verify the currency of the information above using the ASSIST Online database at http://assist.daps.dla.mil/ .