THE REQUIREMENTS FOR ACQUIRING THE PRODUCT(s) DESCRIBED HEREIN SHALL CONSIST OF THIS SPECIFICATION SHEET AND THE ISSUE OF THE FOLLOWING SPECIFICATION LISTED IN THAT ISSUE OF THE DODISS SPECIFIED IN THE SOLICITATION MIL-C-38999.

THIS SPECIFICATION IS APPROVED FOR USE BY all Departments and Agencies of the Department of Defense.

Form Approved
OMB No 0704 0188

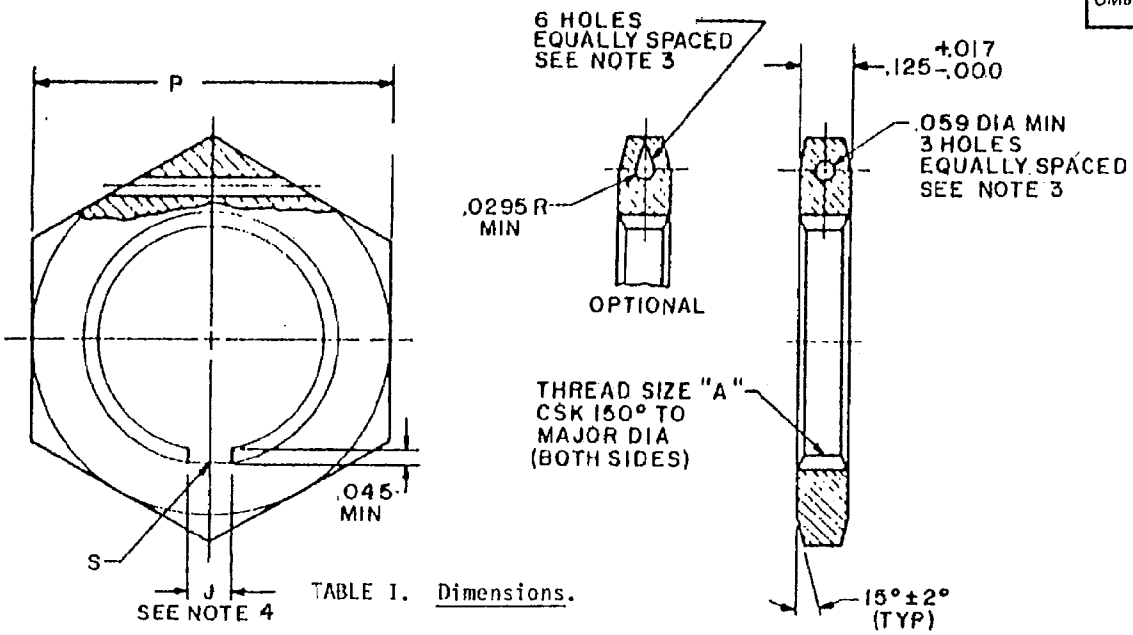


TABLE I. Dimensions.

| Shell size | A Thread size class 2B | J max | P +.017 -.016 hex | S min no. of slots |
|---|---|---|---|---|
| 9 | .6875-24 UNEF | .135 | .875 | 1 |
| 11 | .8125-20 UNEF | " | 1.000 | " |
| 13 | 1.0000-20 UNEF | " | 1.188 | " |
| 15 | 1.1250-18 UNEF | " | 1.312 | " |
| 17 | 1.2500-18 UNEF | .135 | 1.438 | " |
| 19 | 1.3750-18 UNEF | .192 | 1.562 | " |
| 21 | 1.5000-18 UNEF | " | 1.688 | " |
| 23 | 1.6250-18 UNEF | " | 1.812 | " |
| 25 | 1.7500-18 UNS | " | 2.000 | " |

EXAMPLE OF PART NUMBER

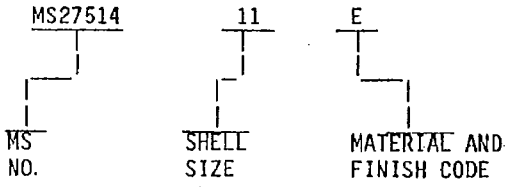


(E) CANCELED; FOR PROCUREMENT USE MS 3186

(E) denotes changes

| | | |
|---|---|---|
| PREPARING ACTIVITY: Air Force - 85<br>CUSTODIANS: ARMY CR NAVY AS<br>AIR FORCE 85 DLA<br>REVIEW: Navy - EC, MC, OS<br>Air Force-11, 15, 17, 99<br>USER: Army-AR, MI; DLA - ES<br>PROJECT NUMBER: 5935-3757 | MILITARY SPECIFICATION SHEET<br>TITLE NUT, SLOTTED, HEXAGON CONNECTOR MOUNTING, SERIES I | SPECIFICATION SHEET NUMBER<br>MS27514E 26 July 1990<br>SUPERSEDING<br>MS27514D 20 February 1978<br>AMSC N/A FSC 5935 |

DISTRIBUTION STATEMENT
A: Approved for public release; distribution is unlimited.

Form Approved
OMB No 0704-0188

| Inches | mm | Inches | mm |
|---|---|---|---|
| .016 | .41 | .875 | 22.23 |
| .017 | .43 | 1.000 | 25.40 |
| .0295 | 7.50 | 1.188 | 30.18 |
| .045 | 1.14 | 1.312 | 33.32 |
| .059 | 1.50 | 1.438 | 36.53 |
| .125 | 3.18 | 1.562 | 39.67 |
| .135 | 3.43 | 1.688 | 42.88 |
| .192 | 4.88 | 2.000 | 50.80 |

TABLE II. Material and finish codes.

| Code | Material | Finish 1/ | Applicable connectors |
|---|---|---|---|
| A | Aluminum: QQ-A-200/8, condition T-6; QQ-A-225/5, condition T-4 or QQ-A-225/8, condition T-6 | A | Series I, finishes A and D |
| B | | B | Series I, finish B |
| C | | C | Series I, finish C |
| F | | F | Series I, finish F |
| E | Corrosion resisting steel: QQ-S-764, type 303 or 303 SE | E | Series I, finish E |

1/ In accordance with MIL-C-38999.

NOTES:
1. Dimensions are in inches.
2. Metric equivalents are given for general information only.
3. Safety wire holes shall not pull out when safety wire NI-CU alloy (MONEL) or NI-CR alloy (INCONEL) .020 (0.51 mm) diameter in accordance with MS20995 is threaded through a hole and a pull of 30 pounds minimum is applied. Two pulls shall be made, one parallel with axis of nut and one perpendicular to axis of nut.
4. If more than one slot is used, they shall be 120° apart. Orientation optional in respect to hexagon configuration. Slot width shall provide sufficient clearance for use on applicable jam nut receptacles.
5. Threads to be in accordance with MIL-S-7742.
6. Remove all burrs and sharp edges.
7. For design feature purposes, this standard takes precedence over acquisition documents referenced herein.
8. Referenced documents shall be of the issue in effect on date of invitation for bid.



SHEET AND THE ISSUE OF THE FOLLOWING SPECIFICATION LISTED IN THAT ISSUE OF THE DODISS SPECIFIED IN THE SOLICITATION MIL-C-38999.