INCH-POUND
MS27499J
24 November 2008
SUPERSEDING
MS27499H
12 July 2002

DETAIL SPECIFICATION SHEET

CONNECTORS, RECEPTACLE, ELECTRICAL, BOX MOUNTING FLANGE, CRIMP TYPE, BAYONET COUPLING, SERIES II

Reactivated after 24 May 2004 and may be used for new and existing designs and acquisitions.

This specification is approved for use by all Departments and Agencies of the Department of Defense.

The requirements for acquiring the product described herein shall consist of this specification sheet and MIL-DTL-38999.

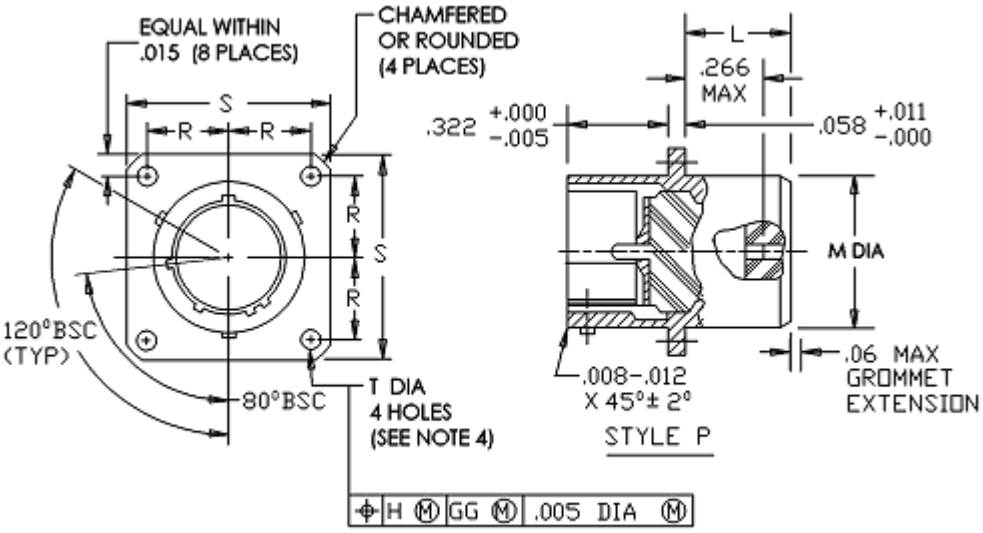

FIGURE 1. Receptacle, class E.

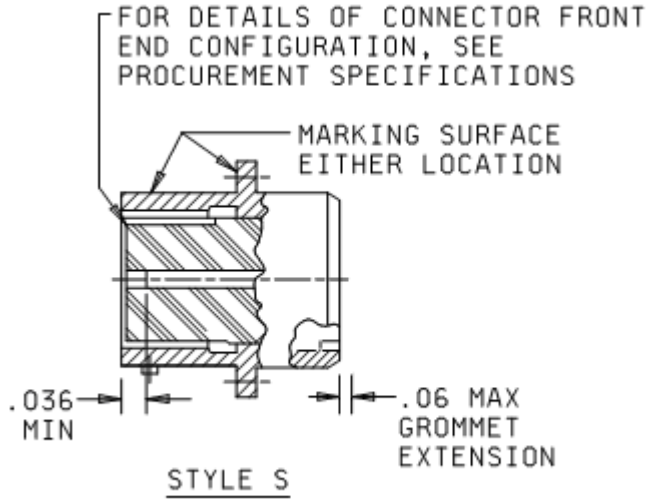

Shell size	L max	M max	R BSC	S max	T +.010 -.005
8	.312	.453	.297	.828	.120
10		.578	.3595	.954	
12		.703	.406	1.047	
14		.828	.453	1.141	
16		.953	.4845	1.234	
18		1.062	.531	1.328	
20		1.188	.578	1.453	
22		1.312	.625	1.578	
24		1.438	.6875	1.703	.147

FIGURE 1. Receptacle, class E – Continued.

Inches	mm	Inches	mm	Inches	mm	Inches	mm
.005	0.13	.147	3.73	.6875	17.45	1.328	33.73
.007	0.18	.223	5.66	.703	17.85	1.391	35.33
.008	0.20	.266	6.76	.828	21.03	1.438	36.53
.010	0.25	.297	7.54	.953	24.21	1.453	36.91
.011	0.28	.312	7.92	.954	24.23	1.516	38.51
.012	0.30	.322	8.18	1.047	26.59	1.578	40.08
.015	0.38	.3595	9.13	1.062	26.97	1.641	41.68
.036	0.91	.406	10.31	1.078	27.38	1.703	43.26
.058	1.47	.453	11.51	1.141	28.98	1.766	44.86
.06	1.5	.4845	12.31	1.188	30.18	1.891	48.03
.120	3.05	.531	13.49	1.234	31.34	2.016	51.21
.123	3.12	.578	14.68	1.266	32.16	2.204	55.98
.139	3.53	.625	15.88	1.312	33.32		

NOTES:

1. Dimensions are in inches.
2. Metric equivalents are given for general information only.
3. For main key and key positions, see MIL-DTL-38999.
4. The gauge feature for GG shall be .010 inch (0.25 mm) smaller than the MMC size at base location.
5. Dimensioning and tolerances are in accordance with ASME-Y14.5M.

FIGURE 1. Receptacle, class E – Continued.

REQUIREMENTS:

Dimensions and configurations: See figure 1.
Interface dimensions shall conform to MIL-DTL-38999.
This receptacle mates with MS27473, MS27480, MS27484 and MS27500.
Procurement Specification: MIL-DTL-38999.
Insert arrangements: See MIL-STD-1560.

Part or Identifying Number (PIN) example:

no letter is required for normal.

Changes from previous issue. Marginal notations are not used in this revision to identify changes with respect to the previous issue due to the extent of the changes.

Referenced documents. In addition to MIL-DTL-38999, this document references the following:

MS27473
MS27480
MS27484
MS27500
MIL-STD-1560
ASME-Y14.5M

CONCLUDING MATERIAL

Custodians:
Army – CR
Navy – AS
Air Force – 85
DLA – CC

Review activities:
Army – AR, MI
Navy – EC, MC, OS
Air Force – 19, 99

Preparing activity:
DLA – CC

(Project 5935–2008-049)

NOTE: The activities listed above were interested in this document as of the date of this document. Since organizations and responsibilities can change, you should verify the currency of the information above using the ASSIST Online database at http://assist.daps.dla.mil.