This standard has been approved by the ASD Department of the Air Force and is mandatory for use by that activity. All other military activities are required to employ this standard where suitable.

Reviewer
Air Force - 85

User
Air Force - 82

P A AIR FORCE 11

Other Cust

PROCUREMENT SPECIFICATION
MIL-C-38159

TITLE
CONNECTOR, PLUG, ELECTRICAL - RAMP POWER, 416/240 VOLTS, MALE

SUPERSEDES

MILITARY STANDARD

MS27265 (USAF)

SHEET 1 OF 1

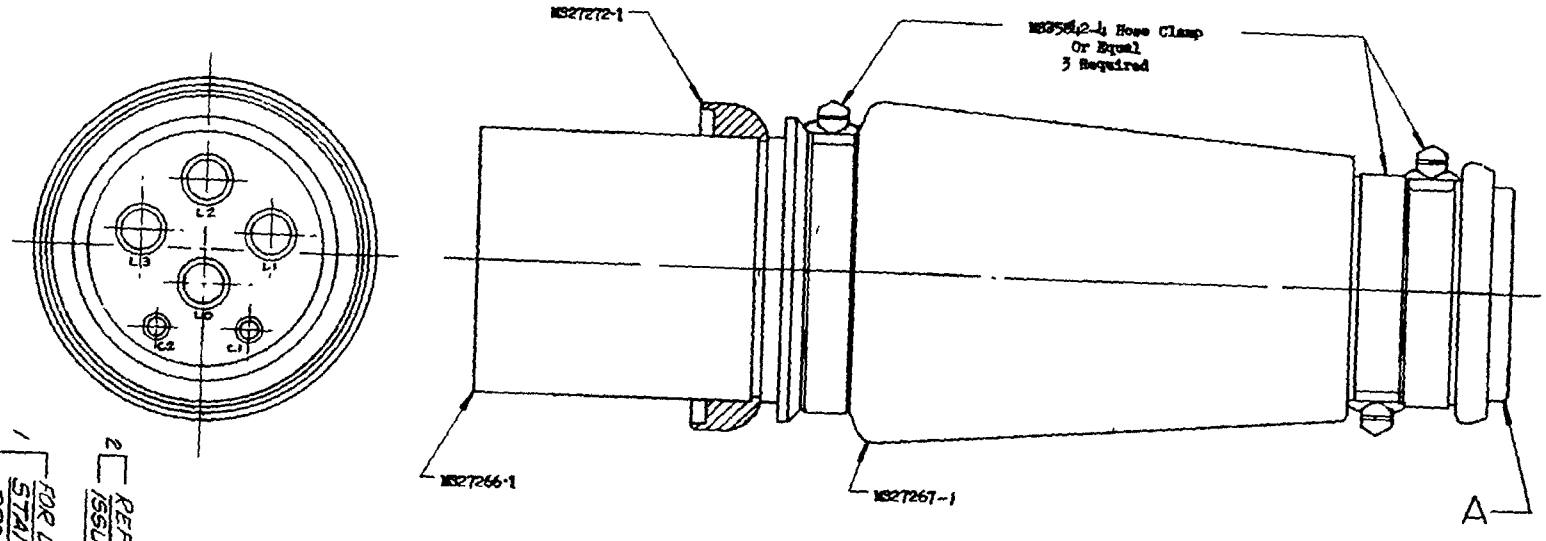

MS PART NO.	A		
	[illegible]MET NO.	CABLE SIZE	RAINSHIELD
MS27265-1	[illegible]71-1	2 1/4 - 1 15/16	MS27272-1
MS27265-2	[illegible]71-2	1 15/16 - 1 3/4	↕
MS27265-3	[illegible]71-3	1 3/4 - 1 9/16	
(A) MS27265-4	[illegible]71-4	1 9/16 - 1 3/8	
(A) MS27265-5	--	2 1/4 - 2 5/32	MS27272-1
(A) MS27265-6	[illegible]71-1	2 1/4 - 1 15/16	MS27272-1
	[illegible]71-2	1 15/16 - 1 3/4	
	[illegible]71-3	1 3/4 - 1 9/16	
	[illegible]271-4	1 9/16 - 1 3/8	

(A)

MS27265-6 CONNECTOR FURNISHED WITH ONE EACH MS27271-1, -2, -3, AND -4 GROMMET AND MS27272-1 RAINSHIELD (A)

2 REFERENCED DOCUMENTS SHALL BE OF THE ISSUE IN EFFECT ON DATE INVITATION FOR BIDS

1 FOR DESIGN FEATURE PURPOSES, THIS STANDARD TAKES PRECEDENCE OVER PROCUREMENT DOCUMENTS REFERENCED HEREIN

APPROVED 7 Oct 63 REVISED (A) 30 AUG 67

FED SUP CLASS
5935

DD FORM 1 SEP 67 672-1 (Limited coordination)

PREVIOUS EDITIONS OF THIS FORM ARE OBSOLETE

*U.S. GOVERNMENT PRINTING OFFICE 1967-301-512/1665