INCH-POUND
MIL-DTL-3786/36B
31 January 2008
SUPERSEDING
MIL-DTL-3786/36A
21 October 2001

DETAIL SPECIFICATION SHEET

SWITCH, ROTARY, CLOSED CONSTRUCTION, 1/4 AMPERE, STYLE SR36

This specification sheet is approved for use by all
Departments and Agencies of the Department of Defense.

The requirements for acquiring the product described herein shall consist of this specification sheet and MIL-DTL-3786.

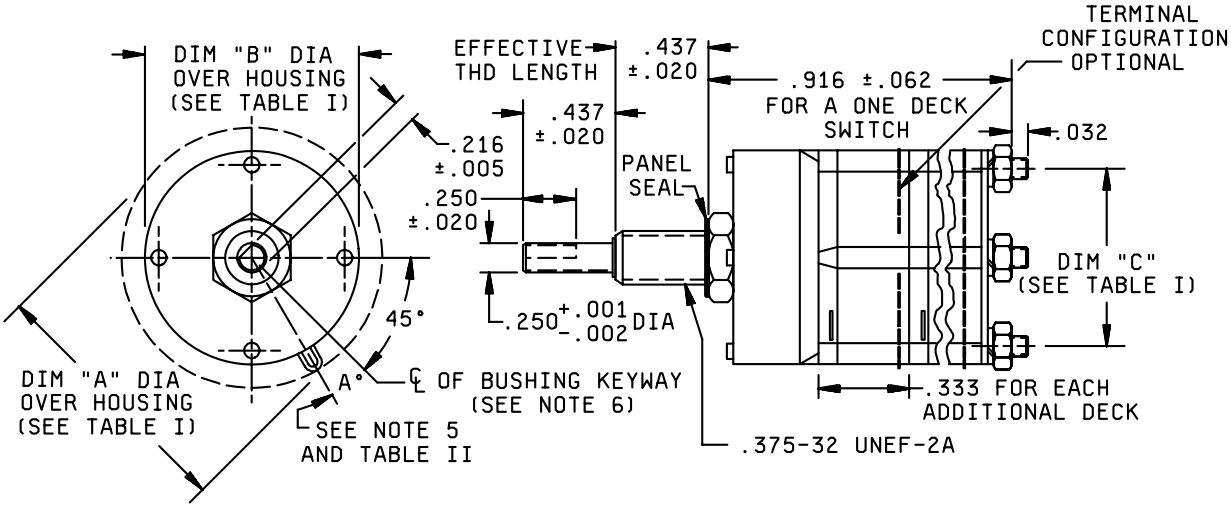

Table 1

ANGLE OF THROW	DIM. “A”	DIM. “B”	DIM. “C”
15°	1.350	1.281	1.156
18°, 22½°	1.190	1.125	1.000

NOTES:

1. Dimensions are in inches. Metric equivalents (to the nearest .01 mm) are given for general information only and are based upon 1 inch = 25.4 mm.
2. Unless otherwise specified, tolerances are ±.015 (.38 mm) and ±3° on angles (non-accumulative).
3. Maximum weight: One deck switch is 50 grams. Add 10 maximum grams for each additional decks based upon 1 oz. = 28.35 grams.
4. Shaft flat angle A is the angle between a line through the center of the shaft and center of the bushing keyway, and another line through the center of the shaft and perpendicular to the shaft flat, with switch in Position Number 1. This refers to panel position. See Figure 2 for terminal location.
5. Bushing keyway .069 (1.75 mm) ± .005 (.13 mm) wide by .036 (.91 mm) ± .003 (0.8 mm) deep measured from a .375 (9.53 mm) diameter.
6. Intergal tab shall not be furnished.

FIGURE 1. Style SR36 switch.

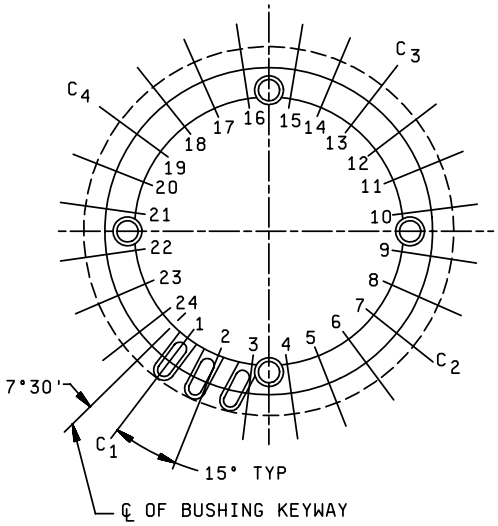

EXAMPLE

SWITCH VIEWED FROM REAR.(C_1,C_2,ECT. REPRESENTS COMMON TERMINAL LOCATION. TYPICAL FOR ALL TERMINAL CONFIGURATION LAYOUTS.)

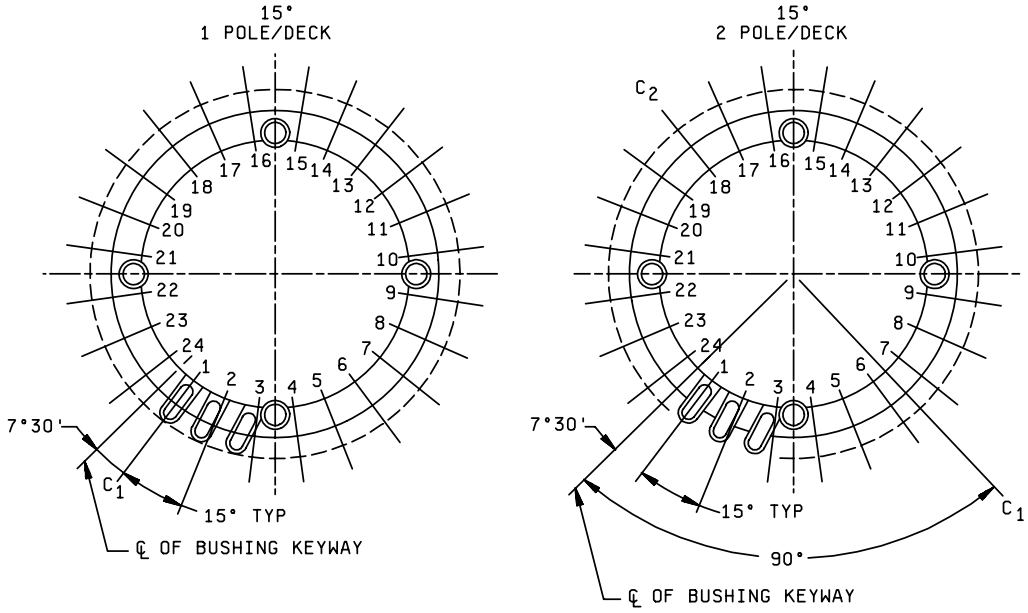

FIGURE 2 Rear view of terminal configurations.

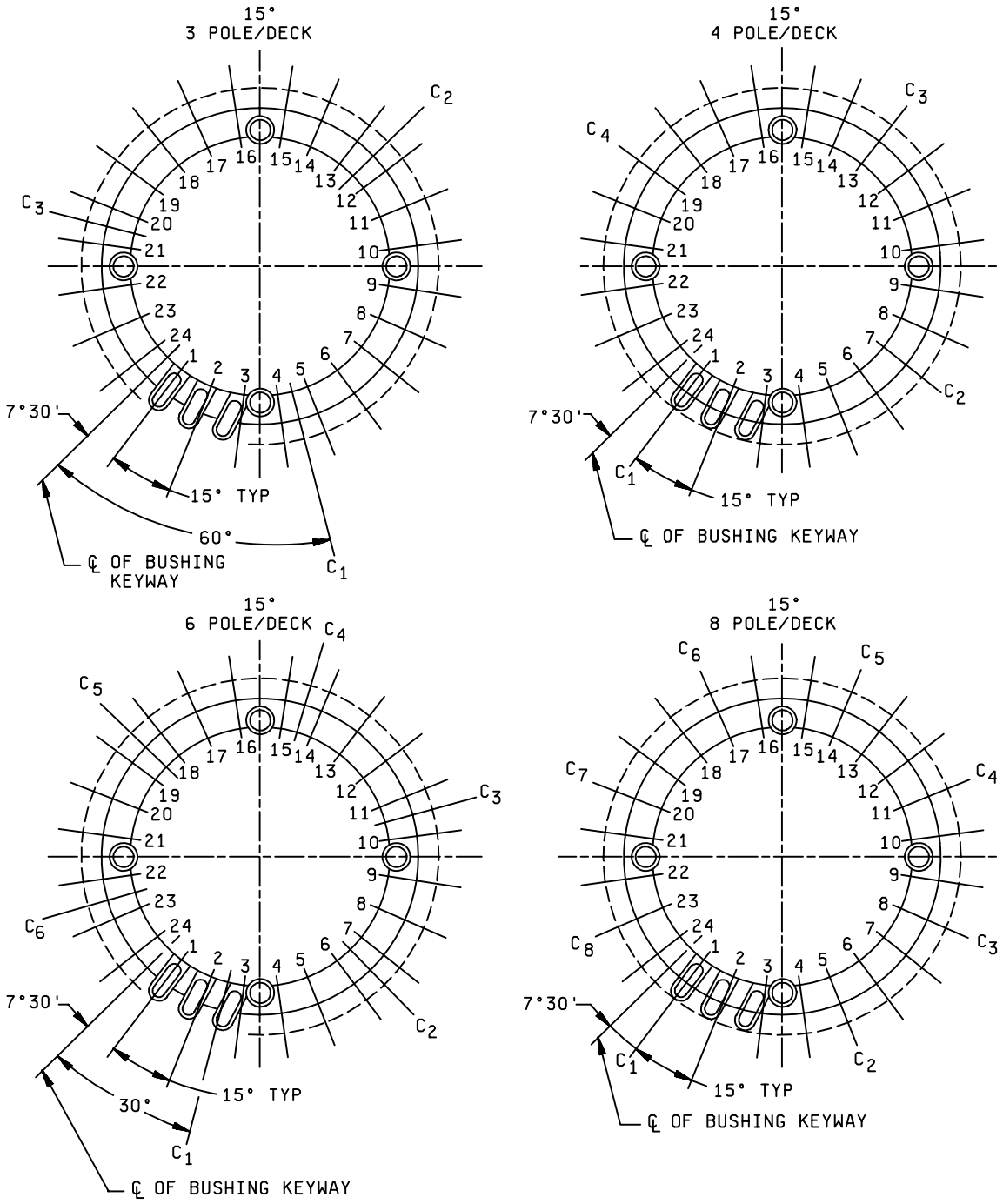

FIGURE 2. Rear view of terminal configurations. - Continued.

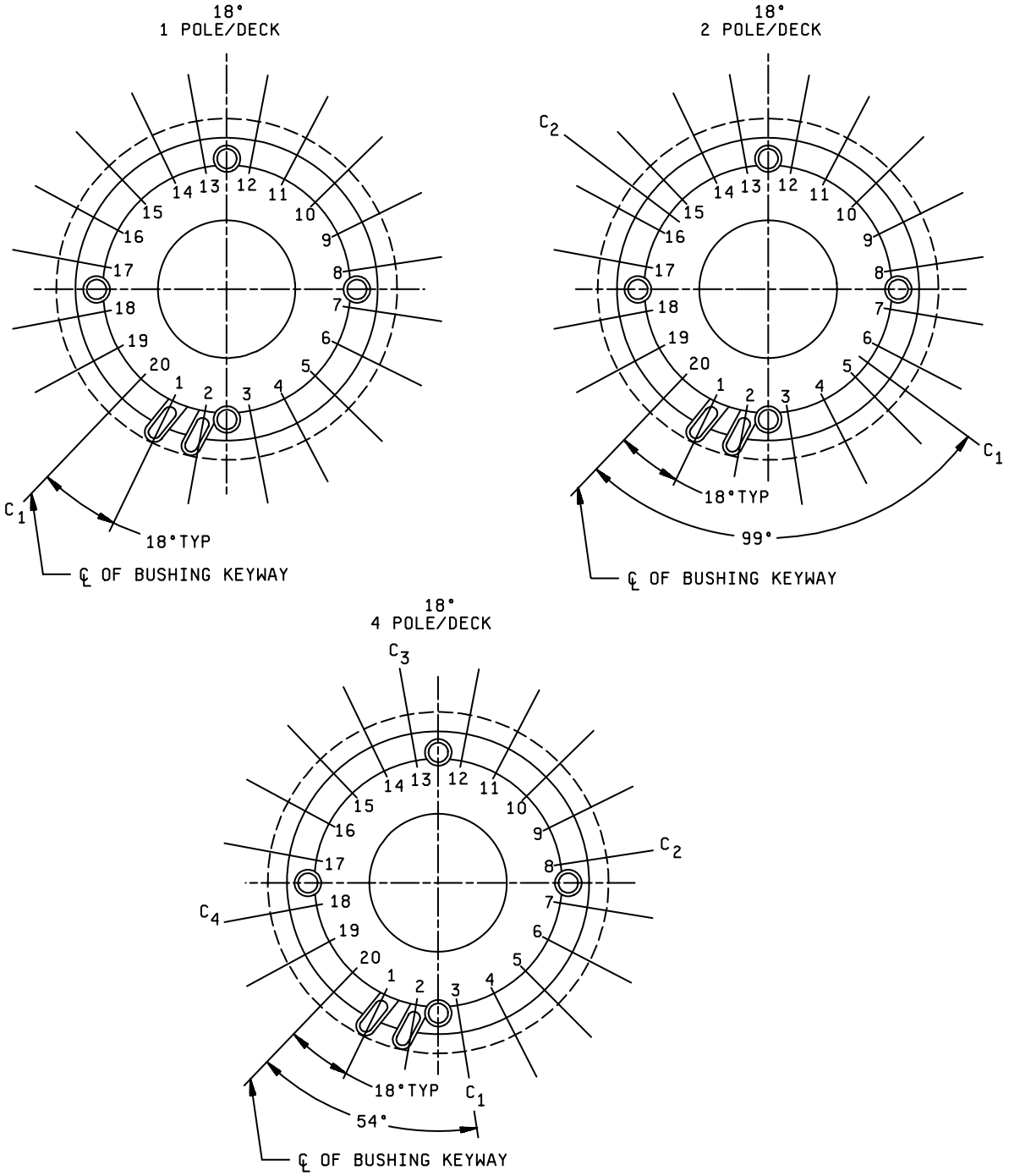

FIGURE 2. Rear view of terminal configurations. - Continued.

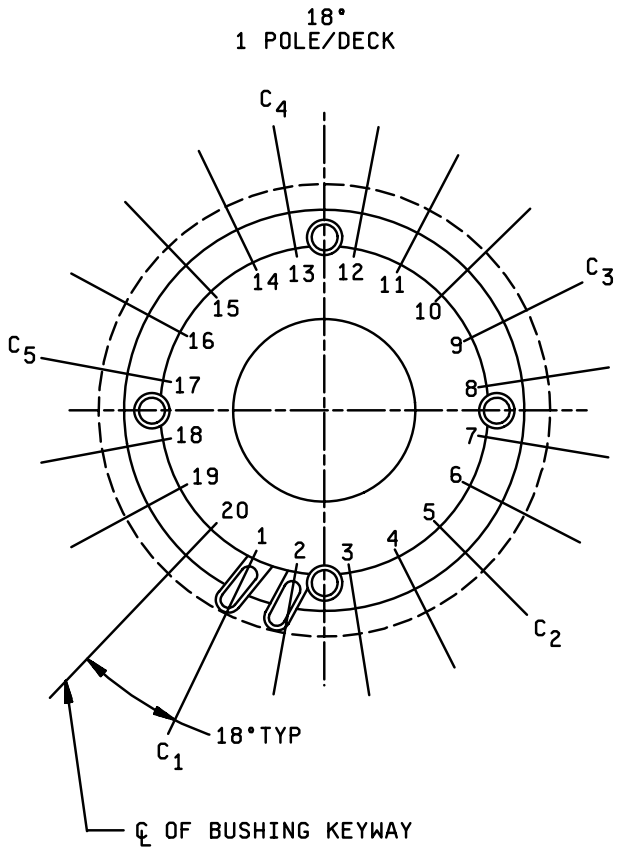

FIGURE 2. Rear view of terminal con

figurations. - Continued.

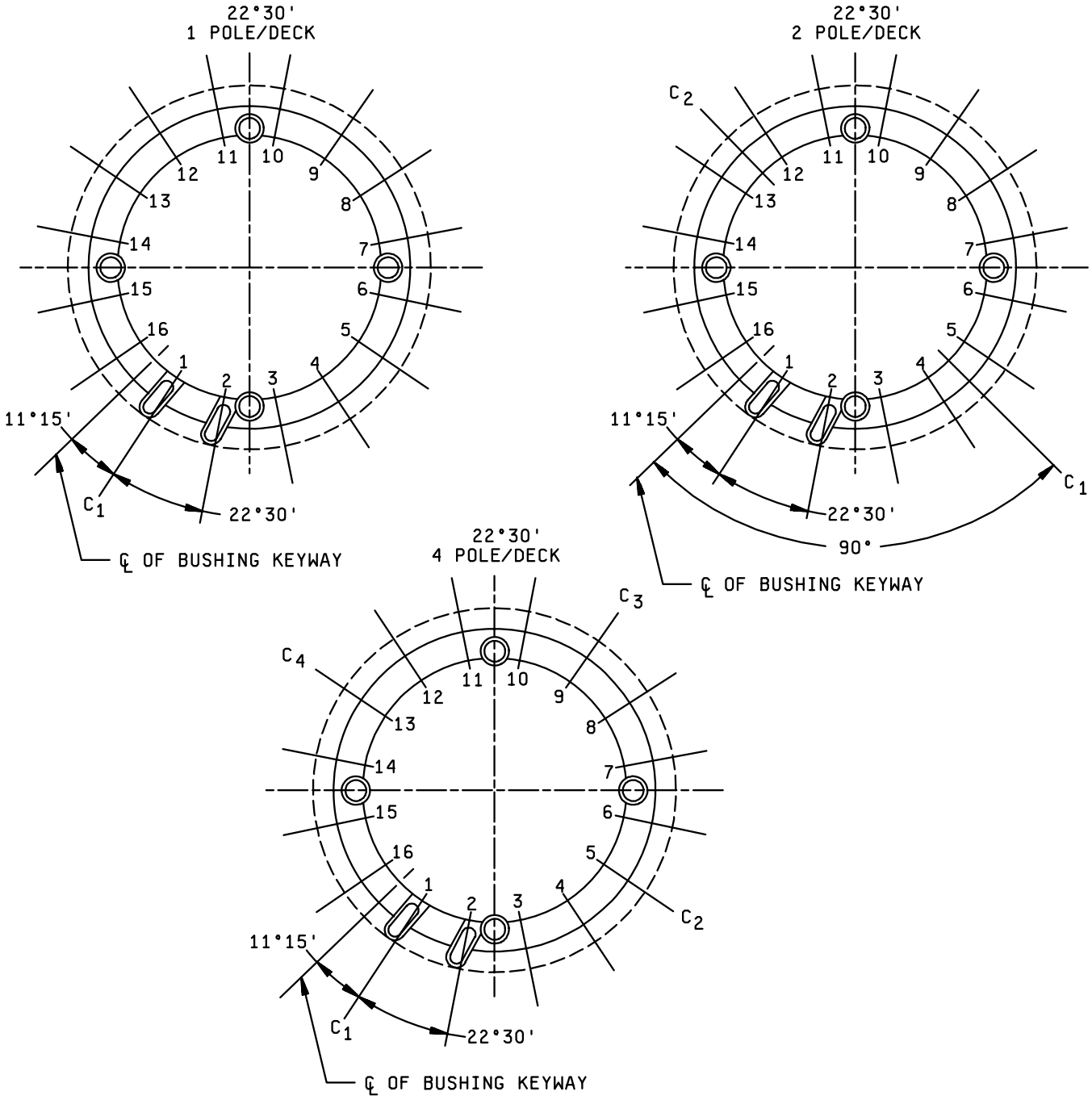

FIGURE 2. Rear view of terminal configurations. - Continued.

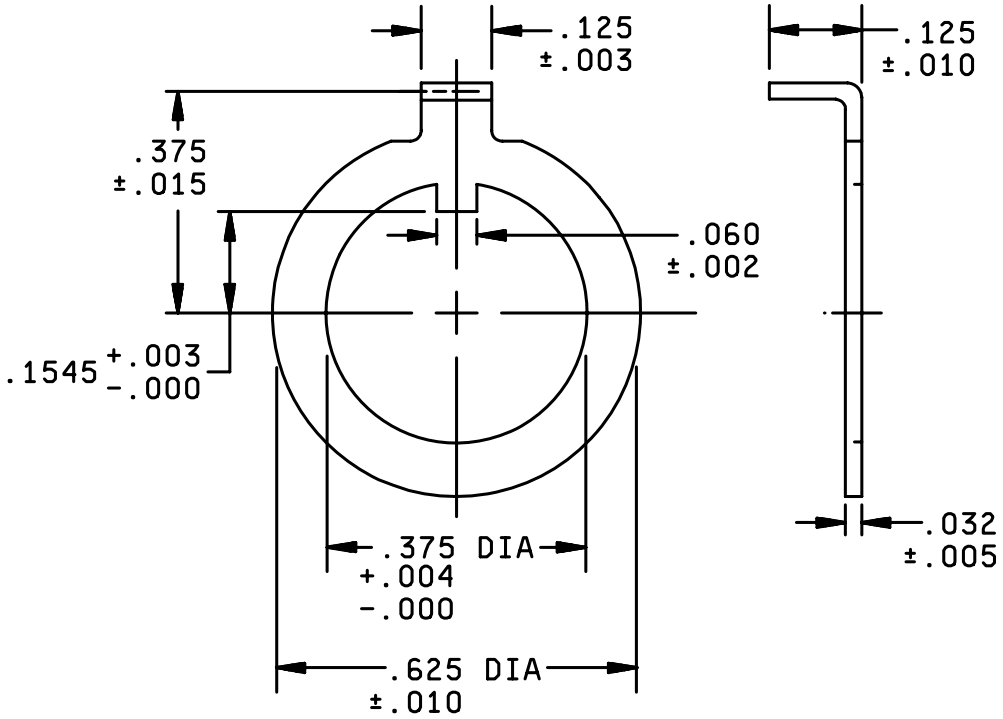

NOTES:
1. Dimensions are in inches.
2. Metric equivalents (to the nearest .01 mm) are given for general information only and are based upon 1 inch = 25.4 mm.

FIGURE 3. Non-turn washer configurations.

REQUIREMENTS:

Dimensions and configuration: See figures 1 and 2.

Maximum number of poles per deck:

15° ----------8 poles
18° ----------5 poles
22° 30'---------4 poles

TABLE II. Values for angle A.

Angle of throw	Angle A
15°	7° 30'
18°	18°
22° 30'	11° 15'

Construction: F.

Insulation material: Symbol P.

Temperature life characteristic: C.

Vibration grade: Symbol 2 (10 to 500 Hz).

Shock type: B (Medium and high impact, method I and method II).

Altitude: Symbol C (70,000 ft.)

Mounting hardware: Switch shall be supplied with two mounting nuts in accordance with MS25082-20, one lockwasher in accordance with NASM35333-42 and one nor-turn washer in accordance with figure 3. Alternative base metals and protective finishes, as approved by the qualifying activity, may be utilized for mounting nut, lock washer, and not-turn washer material. Dimensions shall be in accordance with the referenced hardware specifications.

Terminal strength (pull): A force of 2 pounds shall be applied to the terminals. Terminal bend test is applicable.

Moisture resistance: Insulation resistance, measured immediately after conclusion of the moisture resistance test and while the switches are still in the humidity chamber, shall be not less than .5 megohm. At the end of the drying period, the insulation resistance shall be not less than 10 megohms.

Stop strength: Stops shall be set in a clockwise direction from position number one, when viewed from shaft end. Stops, when supplied, shall withstand a 15 pound-inch torque.

Rotational torque: The minimum and maximum values of torque determined for shaft rotation shall be within the limits specified in table III.

TABLE III. Rotational-torque limits.

Total number of switch poles	Temperature	Torque (lb.-in.)	
		Minimum	Maximum
Less than 6	Room	.5	2.5
	Minimum	.5	3.0
6 or more	Room	1.2	4.5
	Minimum	1.2	5.0

Life (rotational): The test loads for the applicable circuit conditions shall be as specified in table IV. Each of the loads, specified for the applicable environmental condition shall be switched by at least one (1) rotor contact of the switch. After Life (rotational) test, the contact resistance shall not exceed 50 milliohms. Three additional sample units are required for qualification testing at the atmospheric pressure and room temperature condition specified in table IV; the switch to be tested shall be M3786/36-0230.

TABLE IV. Circuit values for life (rotational) test.

Number of cycles and environmental condition	Inductive load (250 millihenries)		Resistive load	
	Milliamperes	Voltage	Milliamperes	Voltage
10,000 cycles at 70,000 feet altitude.	10	28 V dc	50	28 V dc
			20	115 V ac, 60 Hz
10,000 cycles at atmospheric pressure and 125°C	25	28 V dc	75	28 V dc
			25	115 V ac, 60 Hz
10,000 cycles at atmospheric pressure and room temperature	75	28 V dc	250	28 V dc
			150	115 V ac, 60 Hz

Dielectric withstanding voltage: The applicable test voltage specified in table V shall be applied.

TABLE V. Dielectric-test voltages.

Altitude	Test voltage
	(Volts, rms)
At atmospheric pressure	500
At reduced barometric pressure	350

Ordering data: Procurement documents should specify the following:

(a) Title, number, and date of this specification sheet, and the military part number as listed in table IV.

(b) For switches not listed in table VI, procurement shall be in accordance with the ordering data of MIL-DTL-3786 (for switches covered by specification sheets).

Part number: M3786/36(dash number from table VI).

TABLE VI. Switch characteristics and dash numbers.

Dash numbers	Angle of throw	No. Of decks	Poles per deck	Positions per pole	Switching characteristic (S or NS)
0001	15°	1	1	2	NS
0002	15°	1	1	3	NS
0003	15°	1	1	4	NS
0004	15°	1	1	5	NS
0005	15°	1	1	6	NS
0006	15°	1	1	7	NS
0007	15°	1	1	8	NS
0008	15°	1	1	9	NS
0009	15°	1	1	10	NS
0010	15°	1	1	11	NS
0011	15°	1	1	12	NS
0012	15°	1	1	13	NS
0013	15°	1	1	14	NS
0014	15°	1	1	15	NS
0015	15°	1	1	16	NS
0016	15°	1	1	17	NS
0017	15°	1	1	18	NS
0018	15°	1	1	19	NS
0019	15°	1	1	20	NS
0020	15°	1	1	21	NS
0021	15°	1	1	22	NS
0022	15°	1	1	23	NS
0023	15°	1	1	24 1/	NS
0024	15°	1	1	24	NS
0025	15°	1	2	2	NS
0026	15°	1	2	3	NS
0027	15°	1	2	4	NS
0028	15°	1	2	5	NS
0029	15°	1	2	6	NS
0030	15°	1	2	7	NS
0031	15°	1	2	8	NS
0032	15°	1	2	9	NS
0033	15°	1	2	10	NS
0034	15°	1	2	11	NS
0035	15°	1	2	12	NS
0036	15°	1	3	2	NS
0037	15°	1	3	3	NS
0038	15°	1	3	4	NS
0039	15°	1	3	5	NS
0040	15°	1	3	6	NS
0041	15°	1	3	7	NS
0042	15°	1	3	8	NS
0043	15°	1	4	2	NS
0044	15°	1	4	3	NS

1/ See footnote at end of table.

TABLE VI. Switch characteristics and dash numbers - Continued.

Dash numbers	Angle of throw	No. Of decks	Poles per deck	Positions per pole	Switching characteristic (S or NS)
0045	15°	1	4	4	NS
0046	15°	1	4	5	NS
0047	15°	1	4	6	NS
0048	15°	1	6	2	NS
0049	15°	1	6	3	NS
0050	15°	1	6	4	NS
0051	15°	1	8	2	NS
0052	15°	1	8	3	NS
0053	15°	2	1	2	NS
0054	15°	2	1	3	NS
0055	15°	2	1	4	NS
0056	15°	2	1	5	NS
0057	15°	2	1	6	NS
0058	15°	2	1	7	NS
0059	15°	2	1	8	NS
0060	15°	2	1	9	NS
0061	15°	2	1	10	NS
0062	15°	2	1	11	NS
0063	15°	2	1	12	NS
0064	15°	2	1	13	NS
0065	15°	2	1	14	NS
0066	15°	2	1	15	NS
0067	15°	2	1	16	NS
0068	15°	2	1	17	NS
0069	15°	2	1	18	NS
0070	15°	2	1	19	NS
0071	15°	2	1	20	NS
0072	15°	2	1	21	NS
0073	15°	2	1	22	NS
0074	15°	2	1	23	NS
0075	15°	2	1	24 1/	NS
0076	15°	2	1	24	NS
0077	15°	2	2	2	NS
0078	15°	2	2	3	NS
0079	15°	2	2	4	NS
0080	15°	2	2	5	NS
0081	15°	2	2	6	NS
0082	15°	2	2	7	NS
0083	15°	2	2	8	NS
0084	15°	2	2	9	NS
0085	15°	2	2	10	NS
0086	15°	2	2	11	NS
0087	15°	2	2	12	NS
0088	15°	2	3	2	NS
0089	15°	2	3	3	NS
0090	15°	2	3	4	NS
0091	15°	2	3	5	NS
0092	15°	2	3	6	NS

TABLE VI. Switch characteristics and dash numbers - Continued.

Dash numbers	Angle of throw	No. Of decks	Poles per deck	Positions per pole	Switching characteristic (S or NS)
0093	15°	2	3	7	NS
0094	15°	2	3	8	NS
0095	15°	2	4	2	NS
0096	15°	2	4	3	NS
0097	15°	2	4	4	NS
0098	15°	2	4	5	NS
0099	15°	2	4	6	NS
0100	15°	2	6	2	NS
0101	15°	2	6	3	NS
0102	15°	2	6	4	NS
0103	15°	2	8	2	NS
0104	15°	2	8	3	NS
0105	15°	3	1	2	NS
0106	15°	3	1	3	NS
0107	15°	3	1	4	NS
0108	15°	3	1	5	NS
0109	15°	3	1	6	NS
0110	15°	3	1	7	NS
0111	15°	3	1	8	NS
0112	15°	3	1	9	NS
0113	15°	3	1	10	NS
0114	15°	3	1	11	NS
0115	15°	3	1	12	NS
0116	15°	3	1	13	NS
0117	15°	3	1	14	NS
0118	15°	3	1	15	NS
0119	15°	3	1	16	NS
0120	15°	3	1	17	NS
0121	15°	3	1	18	NS
0122	15°	3	1	19	NS
0123	15°	3	1	20	NS
0124	15°	3	1	21	NS
0125	15°	3	1	22	NS
0126	15°	3	1	23	NS
0127	15°	3	1	24 1/	NS
0128	15°	3	1	24	NS
0129	15°	3	2	2	NS
0130	15°	3	2	3	NS
0131	15°	3	2	4	NS
0132	15°	3	2	5	NS
0133	15°	3	2	6	NS
0134	15°	3	2	7	NS
0135	15°	3	2	8	NS
0136	15°	3	2	9	NS
0137	15°	3	2	10	NS
0138	15°	3	2	11	NS
0139	15°	3	2	12	NS
0140	15°	3	3	2	NS

TABLE VI. Switch characteristics and dash numbers - Continued.

Dash numbers	Angle of throw	No. Of decks	Poles per deck	Positions per pole	Switching characteristic (S or NS)
0141	15°	3	3	3	NS
0142	15°	3	3	4	NS
0143	15°	3	3	5	NS
0144	15°	3	3	6	NS
0145	15°	3	3	7	NS
0146	15°	3	3	8	NS
0147	15°	3	4	2	NS
0148	15°	3	4	3	NS
0149	15°	3	4	4	NS
0150	15°	3	4	5	NS
0151	15°	3	4	6	NS
0152	15°	3	6	2	NS
0153	15°	3	6	3	NS
0154	15°	3	6	4	NS
0155	15°	3	8	2	NS
0156	15°	3	8	3	NS
0157	15°	4	1	2	NS
0158	15°	4	1	3	NS
0159	15°	4	1	4	NS
0160	15°	4	1	5	NS
0161	15°	4	1	6	NS
0162	15°	4	1	7	NS
0163	15°	4	1	8	NS
0164	15°	4	1	9	NS
0165	15°	4	1	10	NS
0166	15°	4	1	11	NS
0167	15°	4	1	12	NS
0168	15°	4	1	13	NS
0169	15°	4	1	14	NS
0170	15°	4	1	15	NS
0171	15°	4	1	16	NS
0172	15°	4	1	17	NS
0173	15°	4	1	18	NS
0174	15°	4	1	19	NS
0175	15°	4	1	20	NS
0176	15°	4	1	21	NS
0177	15°	4	1	22	NS
0178	15°	4	1	23	NS
0179	15°	4	1	24 1/	NS
0180	15°	4	1	24	NS
0181	15°	4	2	2	NS
0182	15°	4	2	3	NS
0183	15°	4	2	4	NS
0184	15°	4	2	5	NS
0185	15°	4	2	6	NS
0186	15°	4	2	7	NS
0187	15°	4	2	8	NS
0188	15°	4	2	9	NS

TABLE VI. Switch characteristics and dash numbers - Continued.

Dash numbers	Angle of throw	No. Of decks	Poles per deck	Positions per pole	Switching characteristic (S or NS)
0189	15°	4	2	10	NS
0190	15°	4	2	11	NS
0191	15°	4	2	12	NS
0192	15°	4	3	2	NS
0193	15°	4	3	3	NS
0194	15°	4	3	4	NS
0195	15°	4	3	5	NS
0196	15°	4	3	6	NS
0197	15°	4	3	7	NS
0198	15°	4	3	8	NS
0199	15°	4	4	2	NS
0200	15°	4	4	3	NS
0201	15°	4	4	4	NS
0202	15°	4	4	5	NS
0203	15°	4	4	6	NS
0204	15°	4	6	2	NS
0205	15°	4	6	3	NS
0206	15°	4	6	4	NS
0207	15°	5	1	2	NS
0208	15°	5	1	3	NS
0209	15°	5	1	4	NS
0210	15°	5	1	5	NS
0211	15°	5	1	6	NS
0212	15°	5	1	7	NS
0213	15°	5	1	8	NS
0214	15°	5	1	9	NS
0215	15°	5	1	10	NS
0216	15°	5	1	11	NS
0217	15°	5	1	12	NS
0218	15°	5	1	13	NS
0219	15°	5	1	14	NS
0220	15°	5	1	15	NS
0221	15°	5	1	16	NS
0222	15°	5	1	17	NS
0223	15°	5	1	18	NS
0224	15°	5	1	19	NS
0225	15°	5	1	20	NS
0226	15°	5	1	21	NS
0227	15°	5	1	22	NS
0228	15°	5	1	23	NS
0229	15°	5	1	24 1/	NS
0230	15°	5	1	24	NS
0231	15°	5	2	2	NS
0232	15°	5	2	3	NS
0233	15°	5	2	4	NS
0234	15°	5	2	5	NS
0235	15°	5	2	6	NS
0236	15°	5	2	7	NS

TABLE VI. Switch characteristics and dash numbers - Continued.

Dash numbers	Angle of throw	No. Of decks	Poles per deck	Positions per pole	Switching characteristic (S or NS)
0237	15°	5	2	8	NS
0238	15°	5	2	9	NS
0239	15°	5	2	10	NS
0240	15°	5	2	11	NS
0241	15°	5	2	12	NS
0242	15°	5	3	2	NS
0243	15°	5	3	3	NS
0244	15°	5	3	4	NS
0245	15°	5	3	5	NS
0246	15°	5	3	6	NS
0247	15°	5	3	7	NS
0248	15°	5	3	8	NS
0249	15°	5	4	2	NS
0250	15°	5	4	3	NS
0251	15°	5	4	4	NS
0252	15°	5	4	5	NS
0253	15°	5	4	6	NS
0254	15°	1	1	2	S
0255	15°	1	1	3	S
0256	15°	1	1	4	S
0257	15°	1	1	5	S
0258	15°	1	1	6	S
0259	15°	1	1	7	S
0260	15°	1	1	8	S
0261	15°	1	1	9	S
0262	15°	1	1	10	S
0263	15°	1	1	11	S
0264	15°	1	1	12	S
0265	15°	1	1	13	S
0266	15°	1	1	14	S
0267	15°	1	1	15	S
0268	15°	1	1	16	S
0269	15°	1	1	17	S
0270	15°	1	1	18	S
0271	15°	1	1	19	S
0272	15°	1	1	20	S
0273	15°	1	1	21	S
0274	15°	1	1	22	S
0275	15°	1	1	23	S
0276	15°	1	1	24 1/	S
0277	15°	1	1	24	S
0278	15°	1	2	2	S
0279	15°	1	2	3	S
0280	15°	1	2	4	S
0281	15°	1	2	5	S
0282	15°	1	2	6	S
0283	15°	1	2	7	S
0284	15°	1	2	8	S

TABLE VI. Switch characteristics and dash numbers - Continued.

Dash numbers	Angle of throw	No. Of decks	Poles per deck	Positions per pole	Switching characteristic (S or NS)
0285	15°	1	2	9	S
0286	15°	1	2	10	S
0287	15°	1	2	11	S
0288	15°	1	2	12	S
0289	15°	1	3	2	S
0290	15°	1	3	3	S
0291	15°	1	3	4	S
0292	15°	1	3	5	S
0293	15°	1	3	6	S
0294	15°	1	3	7	S
0295	15°	1	3	8	S
0296	15°	1	4	2	S
0297	15°	1	4	3	S
0298	15°	1	4	4	S
0299	15°	1	4	5	S
0300	15°	1	4	6	S
0301	15°	1	6	2	S
0302	15°	1	6	3	S
0303	15°	1	6	4	S
0304	15°	1	8	2	S
0305	15°	1	8	3	S
0306	15°	2	1	2	S
0307	15°	2	1	3	S
0308	15°	2	1	4	S
0309	15°	2	1	5	S
0310	15°	2	1	6	S
0311	15°	2	1	7	S
0312	15°	2	1	8	S
0313	15°	2	1	9	S
0314	15°	2	1	10	S
0315	15°	2	1	11	S
0316	15°	2	1	12	S
0317	15°	2	1	13	S
0318	15°	2	1	14	S
0319	15°	2	1	15	S
0320	15°	2	1	16	S
0321	15°	2	1	17	S
0322	15°	2	1	18	S
0323	15°	2	1	19	S
0324	15°	2	1	20	S
0325	15°	2	1	21	S
0326	15°	2	1	22	S
0327	15°	2	1	23	S
0328	15°	2	1	24 1/	S
0329	15°	2	1	24	S
0330	15°	2	2	2	S
0331	15°	2	2	3	S
0332	15°	2	2	4	S

TABLE VI. Switch characteristics and dash numbers - Continued.

Dash numbers	Angle of throw	No. Of decks	Poles per deck	Positions per pole	Switching characteristic (S or NS)
0333	15°	2	2	5	S
0334	15°	2	2	6	S
0335	15°	2	2	7	S
0336	15°	2	2	8	S
0337	15°	2	2	9	S
0338	15°	2	2	10	S
0339	15°	2	2	11	S
0340	15°	2	2	12	S
0341	15°	2	3	2	S
0342	15°	2	3	3	S
0343	15°	2	3	4	S
0344	15°	2	3	5	S
0345	15°	2	3	6	S
0346	15°	2	3	7	S
0347	15°	2	3	8	S
0348	15°	2	4	2	S
0349	15°	2	4	3	S
0350	15°	2	4	4	S
0351	15°	2	4	5	S
0352	15°	2	4	6	S
0353	15°	2	6	2	S
0354	15°	2	6	3	S
0355	15°	2	6	4	S
0356	15°	2	8	2	S
0357	15°	2	8	3	S
0358	15°	3	1	2	S
0359	15°	3	1	3	S
0360	15°	3	1	4	S
0361	15°	3	1	5	S
0362	15°	3	1	6	S
0363	15°	3	1	7	S
0364	15°	3	1	8	S
0365	15°	3	1	9	S
0366	15°	3	1	10	S
0367	15°	3	1	11	S
0368	15°	3	1	12	S
0369	15°	3	1	13	S
0370	15°	3	1	14	S
0371	15°	3	1	15	S
0372	15°	3	1	16	S
0373	15°	3	1	17	S
0374	15°	3	1	18	S
0375	15°	3	1	19	S
0376	15°	3	1	20	S
0377	15°	3	1	21	S
0378	15°	3	1	22	S
0379	15°	3	1	23	S
0380	15°	3	1	24 1/	S

TABLE VI. Switch characteristics and dash numbers - Continued.

Dash numbers	Angle of throw	No. Of decks	Poles per deck	Positions per pole	Switching characteristic (S or NS)
0381	15°	3	1	24	S
0382	15°	3	2	2	S
0383	15°	3	2	3	S
0384	15°	3	2	4	S
0385	15°	3	2	5	S
0386	15°	3	2	6	S
0387	15°	3	2	7	S
0388	15°	3	2	8	S
0389	15°	3	2	9	S
0390	15°	3	2	10	S
0391	15°	3	2	11	S
0392	15°	3	2	12	S
0393	15°	3	3	2	S
0394	15°	3	3	3	S
0395	15°	3	3	4	S
0396	15°	3	3	5	S
0397	15°	3	3	6	S
0398	15°	3	3	7	S
0399	15°	3	3	8	S
0400	15°	3	4	2	S
0401	15°	3	4	3	S
0402	15°	3	4	4	S
0403	15°	3	4	5	S
0404	15°	3	4	6	S
0405	15°	3	6	2	S
0406	15°	3	6	3	S
0407	15°	3	6	4	S
0408	15°	3	8	2	S
0409	15°	3	8	3	S
0410	15°	4	1	2	S
0411	15°	4	1	3	S
0412	15°	4	1	4	S
0413	15°	4	1	5	S
0414	15°	4	1	6	S
0415	15°	4	1	7	S
0416	15°	4	1	8	S
0417	15°	4	1	9	S
0418	15°	4	1	10	S
0419	15°	4	1	11	S
0420	15°	4	1	12	S
0421	15°	4	1	13	S
0422	15°	4	1	14	S
0423	15°	4	1	15	S
0424	15°	4	1	16	S
0425	15°	4	1	17	S
0426	15°	4	1	18	S
0427	15°	4	1	19	S
0428	15°	4	1	20	S

TABLE VI. Switch characteristics and dash numbers - Continued.

Dash numbers	Angle of throw	No. Of decks	Poles per deck	Positions per pole	Switching characteristic (S or NS)
0429	15°	4	1	21	S
0430	15°	4	1	22	S
0431	15°	4	1	23	S
0432	15°	4	1	24 1/	S
0433	15°	4	1	24	S
0434	15°	4	2	2	S
0435	15°	4	2	3	S
0436	15°	4	2	4	S
0437	15°	4	2	5	S
0438	15°	4	2	6	S
0439	15°	4	2	7	S
0440	15°	4	2	8	S
0441	15°	4	2	9	S
0442	15°	4	2	10	S
0443	15°	4	2	11	S
0444	15°	4	2	12	S
0445	15°	4	3	2	S
0446	15°	4	3	3	S
0447	15°	4	3	4	S
0448	15°	4	3	5	S
0449	15°	4	3	6	S
0450	15°	4	3	7	S
0451	15°	4	3	8	S
0452	15°	4	4	2	S
0453	15°	4	4	3	S
0454	15°	4	4	4	S
0455	15°	4	4	5	S
0456	15°	4	4	6	S
0457	15°	4	6	2	S
0458	15°	4	6	3	S
0459	15°	4	6	4	S
0460	15°	5	1	2	S
0461	15°	5	1	3	S
0462	15°	5	1	4	S
0463	15°	5	1	5	S
0464	15°	5	1	6	S
0465	15°	5	1	7	S
0466	15°	5	1	8	S
0467	15°	5	1	9	S
0468	15°	5	1	10	S
0469	15°	5	1	11	S
0470	15°	5	1	12	S
0471	15°	5	1	13	S
0472	15°	5	1	14	S
0473	15°	5	1	15	S
0474	15°	5	1	16	S
0475	15°	5	1	17	S
0476	15°	5	1	18	S

TABLE VI. Switch characteristics and dash numbers - Continued.

Dash numbers	Angle of throw	No. Of decks	Poles per deck	Positions per pole	Switching characteristic (S or NS)
0477	15°	5	1	19	S
0478	15°	5	1	20	S
0479	15°	5	1	21	S
0480	15°	5	1	22	S
0481	15°	5	1	23	S
0482	15°	5	1	24 1/	S
0483	15°	5	1	24	S
0484	15°	5	2	2	S
0485	15°	5	2	3	S
0486	15°	5	2	4	S
0487	15°	5	2	5	S
0488	15°	5	2	6	S
0489	15°	5	2	7	S
0490	15°	5	2	8	S
0491	15°	5	2	9	S
0492	15°	5	2	10	S
0493	15°	5	2	11	S
0494	15°	5	2	12	S
0495	15°	5	3	2	S
0496	15°	5	3	3	S
0497	15°	5	3	4	S
0498	15°	5	3	5	S
0499	15°	5	3	6	S
0500	15°	5	3	7	S
0501	15°	5	3	8	S
0502	15°	5	4	2	S
0503	15°	5	4	3	S
0504	15°	5	4	4	S
0505	15°	5	4	5	S
0506	15°	5	4	6	S
0507	18°	1	1	2	NS
0508	18°	1	1	3	NS
0509	18°	1	1	4	NS
0510	18°	1	1	5	NS
0511	18°	1	1	6	NS
0512	18°	1	1	7	NS
0513	18°	1	1	8	NS
0514	18°	1	1	9	NS
0515	18°	1	1	10	NS
0516	18°	1	1	11	NS
0517	18°	1	1	12	NS
0518	18°	1	1	13	NS
0519	18°	1	1	14	NS
0520	18°	1	1	15	NS
0521	18°	1	1	16	NS
0522	18°	1	1	17	NS
0523	18°	1	1	18	NS
0524	18°	1	1	19	NS

TABLE VI. Switch characteristics and dash numbers - Continued.

Dash numbers	Angle of throw	No. Of decks	Poles per deck	Positions per pole	Switching characteristic (S or NS)
0525	18°	1	1	20	NS
0526	18°	1	1	20 1/	NS
0527	18°	1	2	2	NS
0528	18°	1	2	3	NS
0529	18°	1	2	4	NS
0530	18°	1	2	5	NS
0531	18°	1	2	6	NS
0532	18°	1	2	7	NS
0533	18°	1	2	8	NS
0534	18°	1	2	9	NS
0535	18°	1	2	10	NS
0536	18°	1	4	2	NS
0537	18°	1	4	3	NS
0538	18°	1	4	4	NS
0539	18°	1	4	5	NS
0540	18°	1	5	2	NS
0541	18°	1	5	3	NS
0542	18°	1	5	4	NS
0543	18°	2	1	2	NS
0544	18°	2	1	3	NS
0545	18°	2	1	4	NS
0546	18°	2	1	5	NS
0547	18°	2	1	6	NS
0548	18°	2	1	7	NS
0549	18°	2	1	8	NS
0550	18°	2	1	9	NS
0551	18°	2	1	10	NS
0552	18°	2	1	11	NS
0553	18°	2	1	12	NS
0554	18°	2	1	13	NS
0555	18°	2	1	14	NS
0556	18°	2	1	15	NS
0557	18°	2	1	16	NS
0558	18°	2	1	17	NS
0559	18°	2	1	18	NS
0560	18°	2	1	19	NS
0561	18°	2	1	20	NS
0562	18°	2	1	20 1/	NS
0563	18°	2	2	2	NS
0564	18°	2	2	3	NS
0565	18°	2	2	4	NS
0566	18°	2	2	5	NS
0567	18°	2	2	6	NS
0568	18°	2	2	7	NS
0569	18°	2	2	8	NS
0570	18°	2	2	9	NS
0571	18°	2	2	10	NS
0572	18°	2	4	2	NS

TABLE VI. Switch characteristics and dash numbers - Continued.

Dash numbers	Angle of throw	No. Of decks	Poles per deck	Positions per pole	Switching characteristic (S or NS)
0573	18°	2	4	3	NS
0574	18°	2	4	4	NS
0575	18°	2	4	5	NS
0576	18°	2	5	2	NS
0577	18°	2	5	3	NS
0578	18°	2	5	4	NS
0579	18°	3	1	2	NS
0580	18°	3	1	3	NS
0581	18°	3	1	4	NS
0582	18°	3	1	5	NS
0583	18°	3	1	6	NS
0584	18°	3	1	7	NS
0585	18°	3	1	8	NS
0586	18°	3	1	9	NS
0587	18°	3	1	10	NS
0588	18°	3	1	11	NS
0589	18°	3	1	12	NS
0590	18°	3	1	13	NS
0591	18°	3	1	14	NS
0592	18°	3	1	15	NS
0593	18°	3	1	16	NS
0594	18°	3	1	17	NS
0595	18°	3	1	18	NS
0596	18°	3	1	19	NS
0597	18°	3	1	20	NS
0598	18°	3	1	20 1/	NS
0599	18°	3	2	2	NS
0600	18°	3	2	3	NS
0601	18°	3	2	4	NS
0602	18°	3	2	5	NS
0603	18°	3	2	6	NS
0604	18°	3	2	7	NS
0605	18°	3	2	8	NS
0606	18°	3	2	9	NS
0607	18°	3	2	10	NS
0608	18°	3	4	2	NS
0609	18°	3	4	3	NS
0610	18°	3	4	4	NS
0611	18°	3	4	5	NS
0612	18°	3	5	2	NS
0613	18°	3	5	3	NS
0614	18°	3	5	4	NS
0615	18°	4	1	2	NS
0616	18°	4	1	3	NS
0617	18°	4	1	4	NS
0618	18°	4	1	5	NS
0619	18°	4	1	6	NS
0620	18°	4	1	7	NS

TABLE VI. Switch characteristics and dash numbers - Continued.

Dash numbers	Angle of throw	No. Of decks	Poles per deck	Positions per pole	Switching characteristic (S or NS)
0621	18°	4	1	8	NS
0622	18°	4	1	9	NS
0623	18°	4	1	10	NS
0624	18°	4	1	11	NS
0625	18°	4	1	12	NS
0626	18°	4	1	13	NS
0627	18°	4	1	14	NS
0628	18°	4	1	15	NS
0629	18°	4	1	16	NS
0630	18°	4	1	17	NS
0631	18°	4	1	18	NS
0632	18°	4	1	19	NS
0633	18°	4	1	20	NS
0634	18°	4	1	20 1/	NS
0635	18°	4	2	2	NS
0636	18°	4	2	3	NS
0637	18°	4	2	4	NS
0638	18°	4	2	5	NS
0639	18°	4	2	6	NS
0640	18°	4	2	7	NS
0641	18°	4	2	8	NS
0642	18°	4	2	9	NS
0643	18°	4	2	10	NS
0644	18°	4	4	2	NS
0645	18°	4	4	3	NS
0646	18°	4	4	4	NS
0647	18°	4	4	5	NS
0648	18°	4	5	2	NS
0649	18°	4	5	3	NS
0650	18°	4	5	4	NS
0651	18°	5	1	2	NS
0652	18°	5	1	3	NS
0653	18°	5	1	4	NS
0654	18°	5	1	5	NS
0655	18°	5	1	6	NS
0656	18°	5	1	7	NS
0657	18°	5	1	8	NS
0658	18°	5	1	9	NS
0659	18°	5	1	10	NS
0660	18°	5	1	11	NS
0661	18°	5	1	12	NS
0662	18°	5	1	13	NS
0663	18°	5	1	14	NS
0664	18°	5	1	15	NS
0665	18°	5	1	16	NS
0666	18°	5	1	17	NS
0667	18°	5	1	18	NS
0668	18°	5	1	19	NS

TABLE VI. Switch characteristics and dash numbers - Continued.

Dash numbers	Angle of throw	No. Of decks	Poles per deck	Positions per pole	Switching characteristic (S or NS)
0669	18°	5	1	20	NS
0670	18°	5	1	20 1/	NS
0671	18°	5	2	2	NS
0672	18°	5	2	3	NS
0673	18°	5	2	4	NS
0674	18°	5	2	5	NS
0675	18°	5	2	6	NS
0676	18°	5	2	7	NS
0677	18°	5	2	8	NS
0678	18°	5	2	9	NS
0679	18°	5	2	10	NS
0680	18°	5	4	2	NS
0681	18°	5	4	3	NS
0682	18°	5	4	4	NS
0683	18°	5	4	5	NS
0684	18°	1	1	2	S
0685	18°	1	1	3	S
0686	18°	1	1	4	S
0687	18°	1	1	5	S
0688	18°	1	1	6	S
0689	18°	1	1	7	S
0690	18°	1	1	8	S
0691	18°	1	1	9	S
0692	18°	1	1	10	S
0693	18°	1	1	11	S
0694	18°	1	1	12	S
0695	18°	1	1	13	S
0696	18°	1	1	14	S
0697	18°	1	1	15	S
0698	18°	1	1	16	S
0699	18°	1	1	17	S
0700	18°	1	1	18	S
0701	18°	1	1	19	S
0702	18°	1	1	20	S
0703	18°	1	1	20 1/	S
0704	18°	1	2	2	S
0705	18°	1	2	3	S
0706	18°	1	2	4	S
0707	18°	1	2	5	S
0708	18°	1	2	6	S
0709	18°	1	2	7	S
0710	18°	1	2	8	S
0711	18°	1	2	9	S
0712	18°	1	2	10	S
0713	18°	1	4	2	S
0714	18°	1	4	3	S
0715	18°	1	4	4	S
0716	18°	1	4	5	S

TABLE VI. Switch characteristics and dash numbers - Continued.

Dash numbers	Angle of throw	No. Of decks	Poles per deck	Positions per pole	Switching characteristic (S or NS)
0717	18°	1	5	2	S
0718	18°	1	5	3	S
0719	18°	1	5	4	S
0720	18°	2	1	2	S
0721	18°	2	1	3	S
0722	18°	2	1	4	S
0723	18°	2	1	5	S
0724	18°	2	1	6	S
0725	18°	2	1	7	S
0726	18°	2	1	8	S
0727	18°	2	1	9	S
0728	18°	2	1	10	S
0729	18°	2	1	11	S
0730	18°	2	1	12	S
0731	18°	2	1	13	S
0732	18°	2	1	14	S
0733	18°	2	1	15	S
0734	18°	2	1	16	S
0735	18°	2	1	17	S
0736	18°	2	1	18	S
0737	18°	2	1	19	S
0738	18°	2	1	20	S
0739	18°	2	1	20 1/	S
0740	18°	2	2	2	S
0741	18°	2	2	3	S
0742	18°	2	2	4	S
0743	18°	2	2	5	S
0744	18°	2	2	6	S
0745	18°	2	2	7	S
0746	18°	2	2	8	S
0747	18°	2	2	9	S
0748	18°	2	2	10	S
0749	18°	2	4	2	S
0750	18°	2	4	3	S
0751	18°	2	4	4	S
0752	18°	2	4	5	S
0753	18°	2	5	2	S
0754	18°	2	5	3	S
0755	18°	2	5	4	S
0756	18°	3	1	2	S
0757	18°	3	1	3	S
0758	18°	3	1	4	S
0759	18°	3	1	5	S
0760	18°	3	1	6	S
0761	18°	3	1	7	S
0762	18°	3	1	8	S
0763	18°	3	1	9	S
0764	18°	3	1	10	S

TABLE VI. Switch characteristics and dash numbers - Continued.

Dash numbers	Angle of throw	No. Of decks	Poles per deck	Positions per pole	Switching characteristic (S or NS)
0765	18°	3	1	11	S
0766	18°	3	1	12	S
0767	18°	3	1	13	S
0768	18°	3	1	14	S
0769	18°	3	1	15	S
0770	18°	3	1	16	S
0771	18°	3	1	17	S
0772	18°	3	1	18	S
0773	18°	3	1	19	S
0774	18°	3	1	20	S
0775	18°	3	1	20 1/	S
0776	18°	3	2	2	S
0777	18°	3	2	3	S
0778	18°	3	2	4	S
0779	18°	3	2	5	S
0780	18°	3	2	6	S
0781	18°	3	2	7	S
0782	18°	3	2	8	S
0783	18°	3	2	9	S
0784	18°	3	2	10	S
0785	18°	3	4	2	S
0786	18°	3	4	3	S
0787	18°	3	4	4	S
0788	18°	3	4	5	S
0789	18°	3	5	2	S
0790	18°	3	5	3	S
0791	18°	3	5	4	S
0792	18°	4	1	2	S
0793	18°	4	1	3	S
0794	18°	4	1	4	S
0795	18°	4	1	5	S
0796	18°	4	1	6	S
0797	18°	4	1	7	S
0798	18°	4	1	8	S
0799	18°	4	1	9	S
0800	18°	4	1	10	S
0801	18°	4	1	11	S
0802	18°	4	1	12	S
0803	18°	4	1	13	S
0804	18°	4	1	14	S
0805	18°	4	1	15	S
0806	18°	4	1	16	S
0807	18°	4	1	17	S
0808	18°	4	1	18	S
0809	18°	4	1	19	S
0810	18°	4	1	20	S
0811	18°	4	1	20 1/	S
0812	18°	4	2	2	S

TABLE VI. Switch characteristics and dash numbers - Continued.

Dash numbers	Angle of throw	No. Of decks	Poles per deck	Positions per pole	Switching characteristic (S or NS)
0813	18°	4	2	3	S
0814	18°	4	2	4	S
0815	18°	4	2	5	S
0816	18°	4	2	6	S
0817	18°	4	2	7	S
0818	18°	4	2	8	S
0819	18°	4	2	9	S
0820	18°	4	2	10	S
0821	18°	4	4	2	S
0822	18°	4	4	3	S
0823	18°	4	4	4	S
0824	18°	4	4	5	S
0825	18°	4	5	2	S
0826	18°	4	5	3	S
0827	18°	4	5	4	S
0828	18°	5	1	2	S
0829	18°	5	1	3	S
0830	18°	5	1	4	S
0831	18°	5	1	5	S
0832	18°	5	1	6	S
0833	18°	5	1	7	S
0834	18°	5	1	8	S
0835	18°	5	1	9	S
0836	18°	5	1	10	S
0837	18°	5	1	11	S
0838	18°	5	1	12	S
0839	18°	5	1	13	S
0840	18°	5	1	14	S
0841	18°	5	1	15	S
0842	18°	5	1	16	S
0843	18°	5	1	17	S
0844	18°	5	1	18	S
0845	18°	5	1	19	S
0846	18°	5	1	20	S
0847	18°	5	1	20 1/	S
0848	18°	5	2	2	S
0849	18°	5	2	3	S
0850	18°	5	2	4	S
0851	18°	5	2	5	S
0852	18°	5	2	6	S
0853	18°	5	2	7	S
0854	18°	5	2	8	S
0855	18°	5	2	9	S
0856	18°	5	2	10	S
0857	18°	5	4	2	S
0858	18°	5	4	3	S
0859	18°	5	4	4	S
0860	18°	5	4	5	S

TABLE VI. Switch characteristics and dash numbers - Continued.

Dash numbers	Angle of throw	No. Of decks	Poles per deck	Positions per pole	Switching characteristic (S or NS)
0861	22° 30'	1	1	2	NS
0862	22° 30'	1	1	3	NS
0863	22° 30'	1	1	4	NS
0864	22° 30'	1	1	5	NS
0865	22° 30'	1	1	6	NS
0866	22° 30'	1	1	7	NS
0867	22° 30'	1	1	8	NS
0868	22° 30'	1	1	9	NS
0869	22° 30'	1	1	10	NS
0870	22° 30'	1	1	11	NS
0871	22° 30'	1	1	12	NS
0872	22° 30'	1	1	13	NS
0873	22° 30'	1	1	14	NS
0874	22° 30'	1	1	15	NS
0875	22° 30'	1	1	16	NS
0876	22° 30'	1	1	16 1/	NS
0877	22° 30'	1	2	2	NS
0878	22° 30'	1	2	3	NS
0879	22° 30'	1	2	4	NS
0880	22° 30'	1	2	5	NS
0881	22° 30'	1	2	6	NS
0882	22° 30'	1	2	7	NS
0883	22° 30'	1	2	8	NS
0884	22° 30'	1	4	2	NS
0885	22° 30'	1	4	3	NS
0886	22° 30'	1	4	4	NS
0887	22° 30'	2	1	2	NS
0888	22° 30'	2	1	3	NS
0889	22° 30'	2	1	4	NS
0890	22° 30'	2	1	5	NS
0891	22° 30'	2	1	6	NS
0892	22° 30'	2	1	7	NS
0893	22° 30'	2	1	8	NS
0894	22° 30'	2	1	9	NS
0895	22° 30'	2	1	10	NS
0896	22° 30'	2	1	11	NS
0897	22° 30'	2	1	12	NS
0898	22° 30'	2	1	13	NS
0899	22° 30'	2	1	14	NS
0900	22° 30'	2	1	15	NS
0901	22° 30'	2	1	16	NS
0902	22° 30'	2	1	16 1/	NS
0903	22° 30'	2	2	2	NS
0904	22° 30'	2	2	3	NS
0905	22° 30'	2	2	4	NS
0906	22° 30'	2	2	5	NS
0907	22° 30'	2	2	6	NS
0908	22° 30'	2	2	7	NS

TABLE VI. Switch characteristics and dash numbers - Continued.

Dash numbers	Angle of throw	No. Of decks	Poles per deck	Positions per pole	Switching characteristic (S or NS)
0909	22° 30'	2	2	8	NS
0910	22° 30'	2	4	2	NS
0911	22° 30'	2	4	3	NS
0912	22° 30'	3	4	4	NS
0913	22° 30'	3	1	2	NS
0914	22° 30'	3	1	3	NS
0915	22° 30'	3	1	4	NS
0916	22° 30'	3	1	5	NS
0917	22° 30'	3	1	6	NS
0918	22° 30'	3	1	7	NS
0919	22° 30'	3	1	8	NS
0920	22° 30'	3	1	9	NS
0921	22° 30'	3	1	10	NS
0922	22° 30'	3	1	11	NS
0923	22° 30'	3	1	12	NS
0924	22° 30'	3	1	13	NS
0925	22° 30'	3	1	14	NS
0926	22° 30'	3	1	15	NS
0927	22° 30'	3	1	16	NS
0928	22° 30'	3	1	16 1/	NS
0929	22° 30'	3	2	2	NS
0930	22° 30'	3	2	3	NS
0931	22° 30'	3	2	4	NS
0932	22° 30'	3	2	5	NS
0933	22° 30'	3	2	6	NS
0934	22° 30'	3	2	7	NS
0935	22° 30'	3	2	8	NS
0936	22° 30'	3	4	2	NS
0937	22° 30'	3	4	3	NS
0938	22° 30'	3	4	4	NS
0939	22° 30'	4	1	2	NS
0940	22° 30'	4	1	3	NS
0941	22° 30'	4	1	4	NS
0942	22° 30'	4	1	5	NS
0943	22° 30'	4	1	6	NS
0944	22° 30'	4	1	7	NS
0945	22° 30'	4	1	8	NS
0946	22° 30'	4	1	9	NS
0947	22° 30'	4	1	10	NS
0948	22° 30'	4	1	11	NS
0949	22° 30'	4	1	12	NS
0950	22° 30'	4	1	13	NS
0951	22° 30'	4	1	14	NS
0952	22° 30'	4	1	15	NS
0953	22° 30'	4	1	16	NS
0954	22° 30'	4	1	16 1/	NS
0955	22° 30'	4	2	2	NS
0956	22° 30'	4	2	3	NS

TABLE VI. Switch characteristics and dash numbers - Continued.

Dash numbers	Angle of throw	No. Of decks	Poles per deck	Positions per pole	Switching characteristic (S or NS)
0957	22° 30'	4	2	4	NS
0958	22° 30'	4	2	5	NS
0959	22° 30'	4	2	6	NS
0960	22° 30'	4	2	7	NS
0961	22° 30'	4	2	8	NS
0962	22° 30'	4	4	2	NS
0963	22° 30'	4	4	3	NS
0964	22° 30'	4	4	4	NS
0965	22° 30'	5	1	2	NS
0966	22° 30'	5	1	3	NS
0967	22° 30'	5	1	4	NS
0968	22° 30'	5	1	5	NS
0969	22° 30'	5	1	6	NS
0970	22° 30'	5	1	7	NS
0971	22° 30'	5	1	8	NS
0972	22° 30'	5	1	9	NS
0973	22° 30'	5	1	10	NS
0974	22° 30'	5	1	11	NS
0975	22° 30'	5	1	12	NS
0976	22° 30'	5	1	13	NS
0977	22° 30'	5	1	14	NS
0978	22° 30'	5	1	15	NS
0979	22° 30'	5	1	16	NS
0980	22° 30'	5	1	16 1/	NS
0981	22° 30'	5	2	2	NS
0982	22° 30'	5	2	3	NS
0983	22° 30'	5	2	4	NS
0984	22° 30'	5	2	5	NS
0985	22° 30'	5	2	6	NS
0986	22° 30'	5	2	7	NS
0987	22° 30'	5	2	8	NS
0988	22° 30'	5	4	2	NS
0989	22° 30'	5	4	3	NS
0990	22° 30'	5	4	4	NS
0991	22° 30'	1	1	2	S
0992	22° 30'	1	1	3	S
0993	22° 30'	1	1	4	S
0994	22° 30'	1	1	5	S
0995	22° 30'	1	1	6	S
0996	22° 30'	1	1	7	S
0997	22° 30'	1	1	8	S
0998	22° 30'	1	1	9	S
0999	22° 30'	1	1	10	S
1000	22° 30'	1	1	11	S
1001	22° 30'	1	1	12	S
1002	22° 30'	1	1	13	S
1003	22° 30'	1	1	14	S
1004	22° 30'	1	1	15	S

TABLE VI. Switch characteristics and dash numbers - Continued.

Dash numbers	Angle of throw	No. Of decks	Poles per deck	Positions per pole	Switching characteristic (S or NS)
1005	22° 30'	1	1	16	S
1006	22° 30'	1	1	16 1/	S
1007	22° 30'	1	2	2	S
1008	22° 30'	1	2	3	S
1009	22° 30'	1	2	4	S
1010	22° 30'	1	2	5	S
1011	22° 30'	1	2	6	S
1012	22° 30'	1	2	7	S
1013	22° 30'	1	2	8	S
1014	22° 30'	1	4	2	S
1015	22° 30'	1	4	3	S
1016	22° 30'	1	4	4	S
1017	22° 30'	1	1	2	S
1018	22° 30'	2	1	3	S
1019	22° 30'	2	1	4	S
1020	22° 30'	2	1	5	S
1021	22° 30'	2	1	6	S
1022	22° 30'	2	1	7	S
1023	22° 30'	2	1	8	S
1024	22° 30'	2	1	9	S
1025	22° 30'	2	1	10	S
1026	22° 30'	2	1	11	S
1027	22° 30'	2	1	12	S
1028	22° 30'	2	1	13	S
1029	22° 30'	2	1	14	S
1030	22° 30'	2	1	15	S
1031	22° 30'	2	1	16	S
1032	22° 30'	2	1	16 1/	S
1033	22° 30'	2	2	2	S
1034	22° 30'	2	2	3	S
1035	22° 30'	2	2	4	S
1036	22° 30'	2	2	5	S
1037	22° 30'	2	2	6	S
1038	22° 30'	2	2	7	S
1039	22° 30'	2	2	8	S
1040	22° 30'	2	4	2	S
1041	22° 30'	2	4	3	S
1042	22° 30'	2	4	4	S
1043	22° 30'	3	1	2	S
1044	22° 30'	3	1	3	S
1045	22° 30'	3	1	4	S
1046	22° 30'	3	1	5	S
1047	22° 30'	3	1	6	S
1048	22° 30'	3	1	7	S
1049	22° 30'	3	1	8	S
1050	22° 30'	3	1	9	S
1051	22° 30'	3	1	10	S
1052	22° 30'	3	1	11	S

TABLE VI. Switch characteristics and dash numbers - Continued.

Dash numbers	Angle of throw	No. Of decks	Poles per deck	Positions per pole	Switching characteristic (S or NS)
1053	22° 30'	3	1	12	S
1054	22° 30'	3	1	13	S
1055	22° 30'	3	1	14	S
1056	22° 30'	3	1	15	S
1057	22° 30'	3	1	16	S
1058	22° 30'	3	1	16 1/	S
1059	22° 30'	3	2	2	S
1060	22° 30'	3	2	3	S
1061	22° 30'	3	2	4	S
1062	22° 30'	3	2	5	S
1063	22° 30'	3	2	6	S
1064	22° 30'	3	2	7	S
1065	22° 30'	3	2	8	S
1066	22° 30'	3	4	2	S
1067	22° 30'	3	4	3	S
1068	22° 30'	3	4	4	S
1069	22° 30'	3	1	2	S
1070	22° 30'	4	1	3	S
1071	22° 30'	4	1	4	S
1072	22° 30'	4	1	5	S
1073	22° 30'	4	1	6	S
1074	22° 30'	4	1	7	S
1075	22° 30'	4	1	8	S
1076	22° 30'	4	1	9	S
1077	22° 30'	4	1	10	S
1078	22° 30'	4	1	11	S
1079	22° 30'	4	1	12	S
1080	22° 30'	4	1	13	S
1081	22° 30'	4	1	14	S
1082	22° 30'	4	1	15	S
1083	22° 30'	4	1	16	S
1084	22° 30'	4	1	16 1/	S
1085	22° 30'	4	2	2	S
1086	22° 30'	4	2	3	S
1087	22° 30'	4	2	4	S
1088	22° 30'	4	2	5	S
1089	22° 30'	4	2	6	S
1090	22° 30'	4	2	7	S
1091	22° 30'	4	2	8	S
1092	22° 30'	4	4	2	S
1093	22° 30'	4	4	3	S
1094	22° 30'	4	4	4	S
1095	22° 30'	5	1	2	S
1096	22° 30'	5	1	3	S
1097	22° 30'	5	1	4	S
1098	22° 30'	5	1	5	S
1099	22° 30'	5	1	6	S
1100	22° 30'	5	1	7	S

TABLE VI. Switch characteristics and dash numbers - Continued.

Dash numbers	Angle of throw	No. Of decks	Poles per deck	Positions per pole	Switching characteristic (S or NS)
1101	22° 30'	5	1	8	S
1102	22° 30'	5	1	9	S
1103	22° 30'	5	1	10	S
1104	22° 30'	5	1	11	S
1105	22° 30'	5	1	12	S
1106	22° 30'	5	1	13	S
1107	22° 30'	5	1	14	S
1108	22° 30'	5	1	15	S
1109	22° 30'	5	1	16	S
1110	22° 30'	5	1	16 1/	S
1112	22° 30'	5	2	3	S
1113	22° 30'	5	2	4	S
1114	22° 30'	5	2	5	S
1115	22° 30'	5	2	6	S
1116	22° 30'	5	2	7	S
1117	22° 30'	5	2	8	S
1118	22° 30'	5	4	2	S
1119	22° 30'	5	4	3	S
1120	22° 30'	5	4	4	S

1/ Continuous rotation, all other switches have stops provided at the beginning and end of the range of control positions.

The margins of this specification are marked with vertical lines to indicate where modifications were made. This was done as a convenience only and the Government assumes no liability whatsoever for any inaccuracies in these notations. Bidders and contractors are cautioned to evaluate the requirements of this document based on the entire content irrespective of the marginal notations.

Referenced documents:
MIL-DTL-3786

Custodians:
Army - CR
Navy - EC
Air Force - 11
DLA – CC

Preparing activity:
DLA - CC

(Project 5930-2008-005)

NOTE: The activities listed above were interested in this document as of the date of this document. Since organizations and responsibilities can change, you should verify the currency of the information above using the ASSIST Online database at http://assist.daps.dla.mil.