DETAIL SPECIFICATION SHEET

HOSE ASSEMBLY, POLYTETRAFLUOROETHYLENE, CONVOLUTED, PERMANENTLY ATTACHED FITTINGS, HIGH TEMPERATURE, MEDIUM PRESSURE, FLANGE-TO-FLANGE

This specification is approved for use by all
Departments and Agencies of the Department of Defense.

The requirements for acquiring the product described herein shall consist of this specification sheet and MIL-DTL-32434.

Hose assembly dimensions for style A: See figure 1.

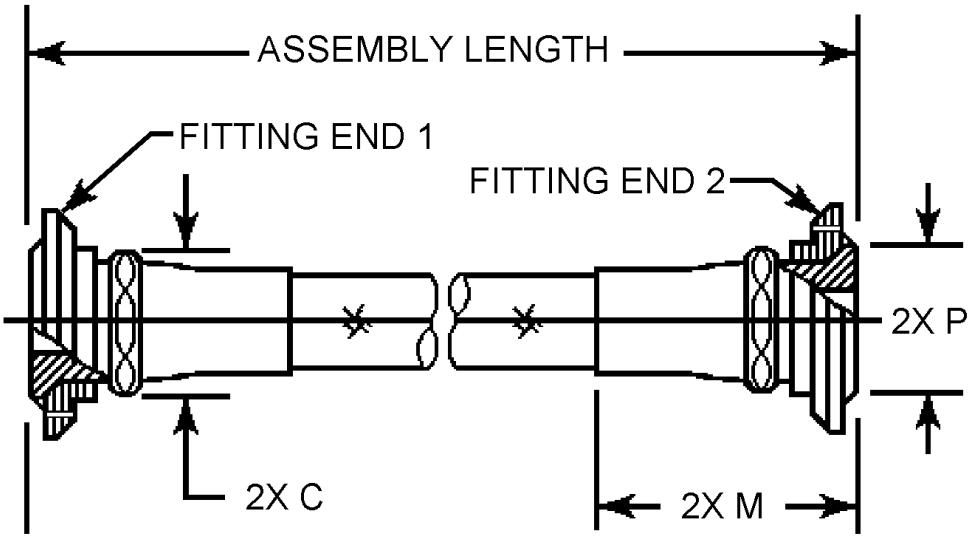

Fitting ends		Hose size	Dimensions		
1	2		C (max)	M (max)	P (max)
Straight	Straight	8	.880	1.560	.875
		10	.967	1.570	1.000
		12	1.122	1.640	1.250
		16	1.480	1.750	1.500
		20	1.750	1.990	1.844
		24	2.150	2.260	2.125

NOTE: Style A uses class 1 fittings which are made from corrosion resistant steel (CRES).

FIGURE 1. Style A hose assembly dimensions.

Hose assembly dimensions for style B: See figure 2.

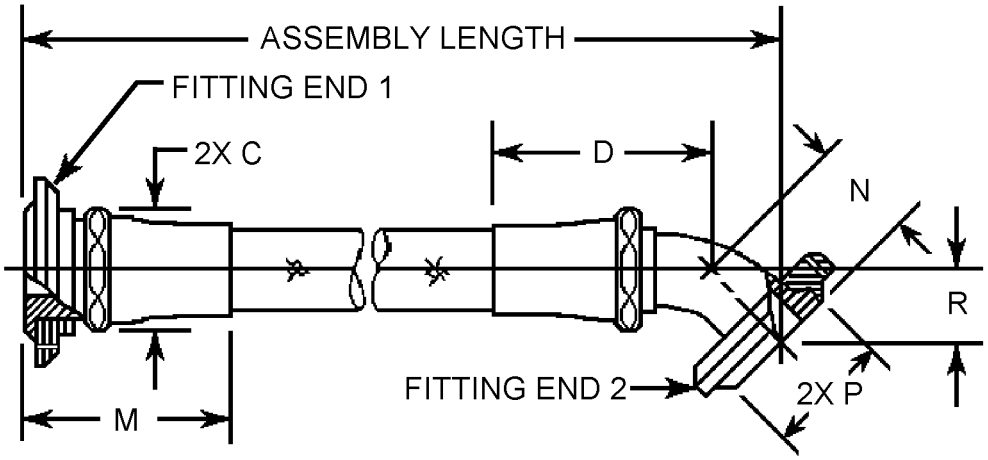

Fitting ends		Hose size	Dimensions						
1	2		C (max)	D (max)	M (max)	N (max)	P (max)	R (min)	R (max)
Straight	45°	8	.880	1.722	1.560	.606	.875	.303	.428
		10	.967	2.037	1.570	.658	1.000	.340	.465
		12	1.122	2.368	1.640	.789	1.250	.433	.558
		16	1.480	2.583	1.750	.929	1.500	.470	.657
		20	1.750	2.946	1.990	1.020	1.844	.534	.721
		24	2.150	3.210	2.260	1.186	2.125	.589	.839

NOTES:
1. Style B uses class 1 fittings which are made from CRES.
2. Dimension “N (max)” is an installation dimension and not a design dimension

FIGURE 2. Style B hose assembly dimensions.

Hose assembly dimensions for style C: See figure 3.

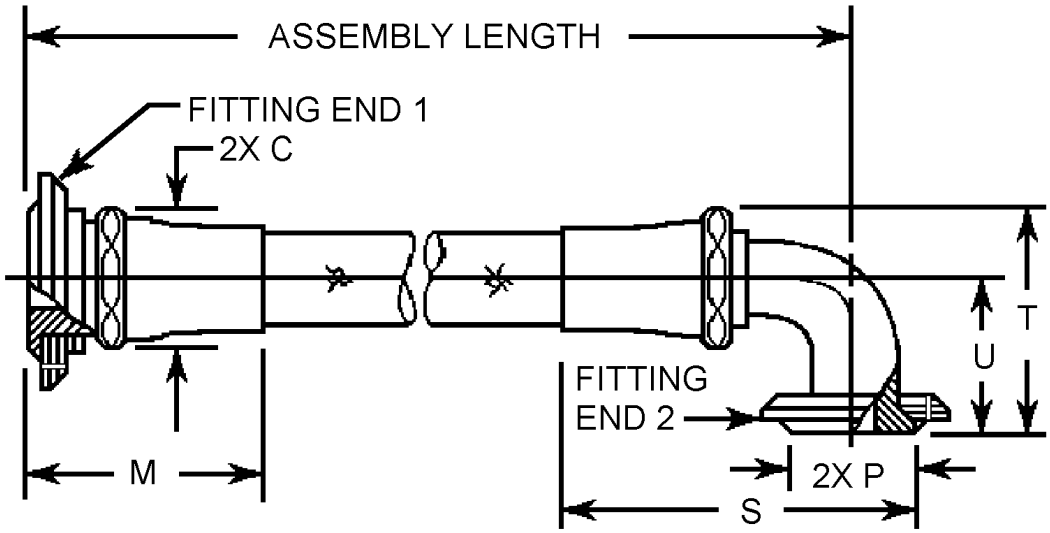

Fitting ends		Hose size	Dimensions						
1	2		C (max)	M (max)	P (max)	S (max)	T (max)	U (min)	U (max)
Straight	90°	8	.880	1.560	.875	2.320	1.422	.857	.982
		10	.967	1.570	1.000	2.875	1.499	.861	1.015
		12	1.122	1.640	1.250	3.606	1.807	1.032	1.246
		16	1.480	1.750	1.500	3.981	2.174	1.156	1.434
		20	1.750	1.990	1.844	4.435	2.590	1.344	1.715
		24	2.150	2.260	2.125	5.075	3.103	1.516	2.028

NOTES:
1. Style C uses class 1 fittings which are made from CRES.
2. Dimension “T (max)” is an installation dimension and not a design dimension.

FIGURE 3. Style C hose assembly dimensions.

Hose assembly dimensions for style D: See figure 4.

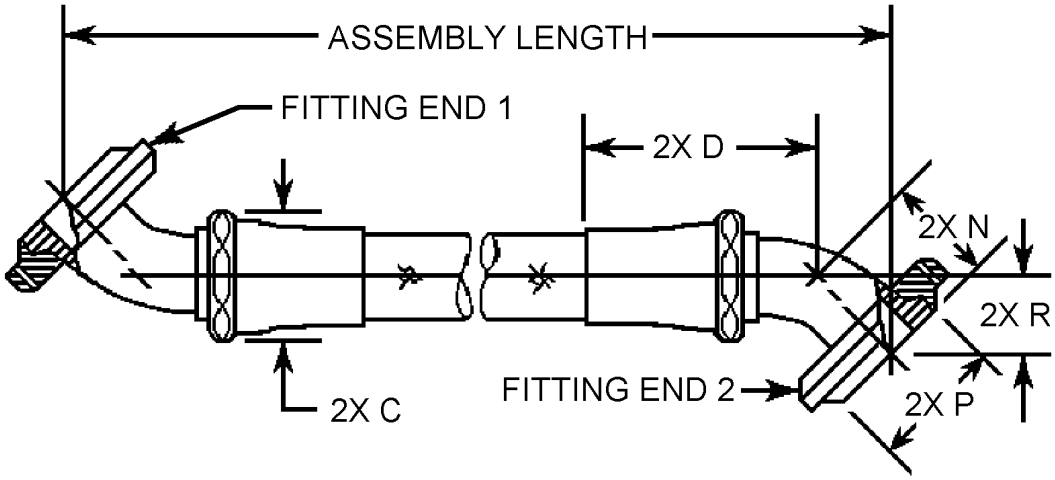

Fitting ends		Hose size	Dimensions					
1	2		C (max)	D (max)	N (max)	P (max)	R (min)	R (max)
45°	45°	8	.880	1.722	.606	.875	.303	.428
		10	.967	2.037	.658	1.000	.340	.465
		12	1.122	2.368	.789	1.250	.433	.558
		16	1.480	2.583	.929	1.500	.470	.657
		20	1.750	2.946	1.020	1.844	.534	.721
		24	2.150	3.210	1.186	2.125	.589	.839

NOTES:
1. Style D uses class 1 fittings which are made from CRES.
2. Dimensions “N (max)” are installation dimensions and not design dimensions.

FIGURE 4. Style D hose assembly dimensions.

Hose assembly dimensions for style E: See figure 5.

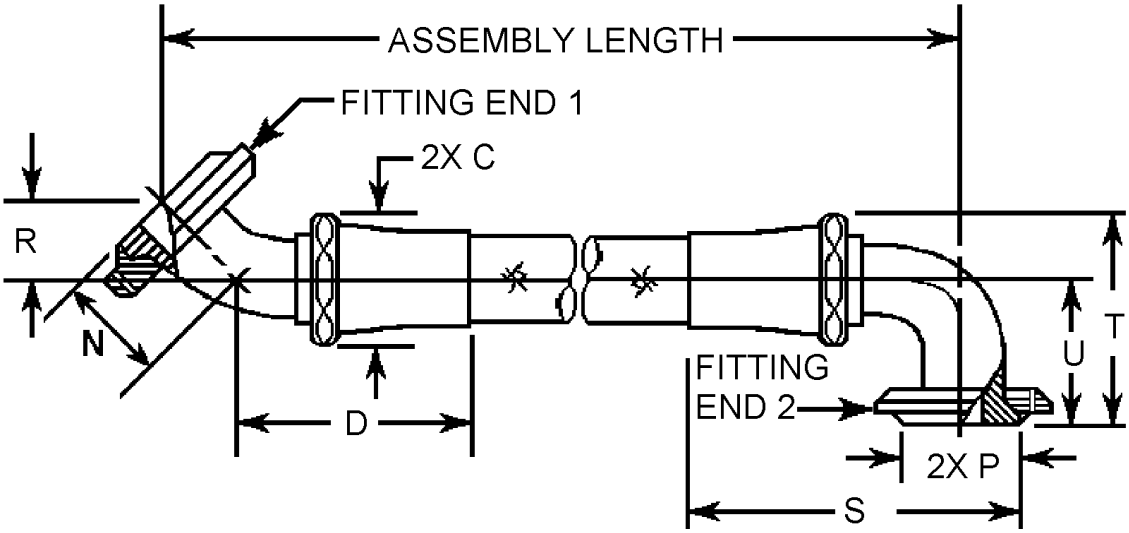

Fitting ends		Hose size	Dimensions									
1	2		C (max)	D (max)	N (max)	P (max)	R (min)	R (max)	S (max)	T (max)	U (min)	U (max)
45°	90°	8	.880	1.722	.606	.875	.303	.428	2.320	1.422	.857	.982
		10	.967	2.037	.658	1.000	.340	.465	2.875	1.499	.861	1.015
		12	1.122	2.368	.789	1.250	.433	.558	3.606	1.807	1.032	1.246
		16	1.480	2.583	.929	1.500	.470	.657	3.981	2.174	1.156	1.434
		20	1.750	2.946	1.020	1.844	.534	.721	4.435	2.590	1.344	1.715
		24	2.150	3.210	1.186	2.125	.589	.839	5.075	3.103	1.516	2.028

NOTES:
1. Style E uses class 1 fittings which are made from CRES.
2. Dimensions “N (max)” and “T (max)” are installation dimensions and not design dimensions.

FIGURE 5. Style E hose assembly dimensions.

Hose assembly dimensions for style F: See figure 6.

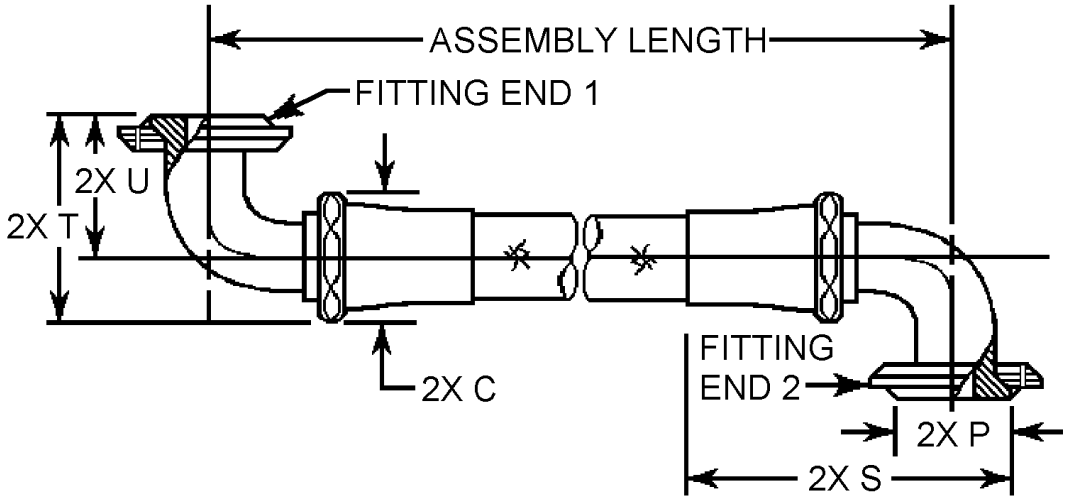

Fitting ends		Hose size	Dimensions					
1	2		C (max)	P (max)	S (max)	T (max)	U (min)	U (max)
90°	90°	8	.880	.875	2.320	1.422	.857	.982
		10	.967	1.000	2.875	1.499	.861	1.015
		12	1.122	1.250	3.606	1.807	1.032	1.246
		16	1.480	1.500	3.981	2.174	1.156	1.434
		20	1.750	1.844	4.435	2.590	1.344	1.715
		24	2.150	2.125	5.075	3.103	1.516	2.028

NOTES:
1. Style F uses class 1 fittings which are made from CRES.
2. Dimensions “T (max)” are installation dimensions and not design dimensions.

FIGURE 6. Style F hose assembly dimensions.

Hose assembly dimensions for style G: See figure 7.

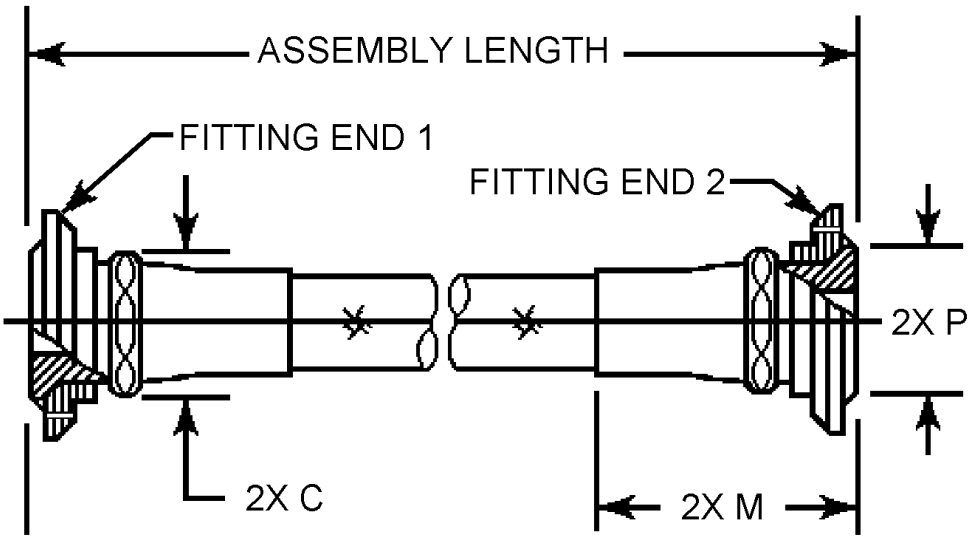

Fitting ends		Hose size	Dimensions		
1	2		C (max)	M (max)	P (max)
Straight	Straight	8	.880	1.560	.875
		10	.967	1.570	1.000
		12	1.122	1.640	1.250
		16	1.480	1.750	1.500
		20	1.750	1.990	1.844
		24	2.150	2.260	2.125

NOTE: Style G uses class 2 fittings which are made from a combination of aluminum and CRES.

FIGURE 7. Style G hose assembly dimensions.

Hose assembly dimensions for style H: See figure 8.

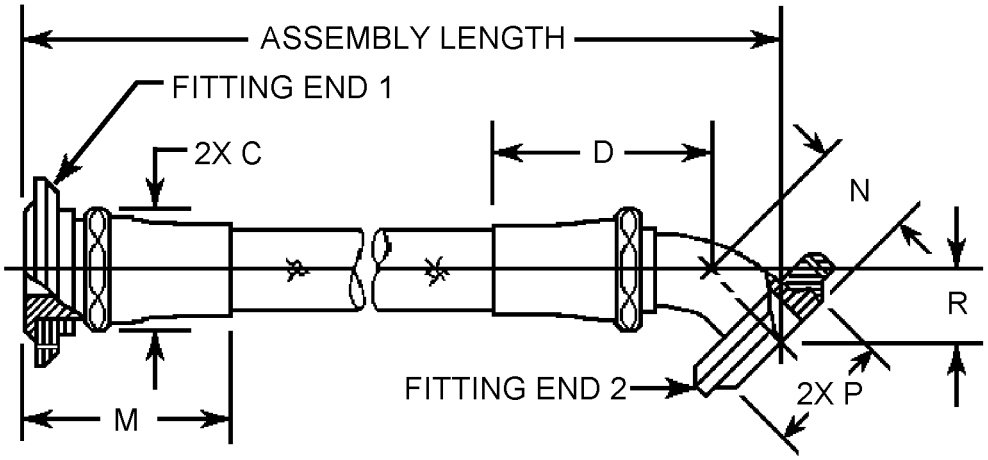

Fitting ends		Hose size	Dimensions						
1	2		C (max)	D (max)	M (max)	N (max)	P (max)	R (min)	R (max)
Straight	45°	8	.880	1.722	1.560	.606	.875	.303	.428
		10	.967	2.037	1.570	.658	1.000	.340	.465
		12	1.122	2.368	1.640	.789	1.250	.433	.558
		16	1.480	2.583	1.750	.929	1.500	.470	.657
		20	1.750	2.946	1.990	1.020	1.844	.534	.721
		24	2.150	3.210	2.260	1.186	2.125	.589	.839

NOTES:
1. Style H uses class 2 fittings which are made from a combination of aluminum and CRES.
2. Dimension “N (max)” is an installation dimension and not a design dimension.

FIGURE 8. Style H hose assembly dimensions.

Hose assembly dimensions for style J: See figure 9.

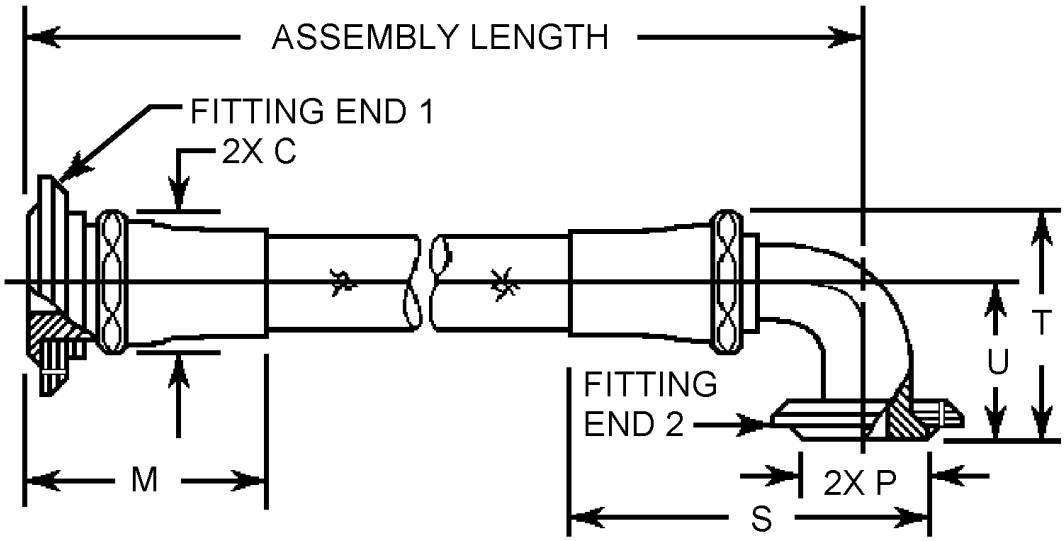

Fitting ends		Hose size	Dimensions						
1	2		C (max)	M (max)	P (max)	S (max)	T (max)	U (min)	U (max)
Straight	90°	8	.880	1.560	.875	2.320	1.422	.857	.982
		10	.967	1.570	1.000	2.875	1.499	.861	1.015
		12	1.122	1.640	1.250	3.606	1.807	1.032	1.246
		16	1.480	1.750	1.500	3.981	2.174	1.156	1.434
		20	1.750	1.990	1.844	4.435	2.590	1.344	1.715
		24	2.150	2.260	2.125	5.075	3.103	1.516	2.028

NOTES:
1. Style J uses class 2 fittings which are made from a combination of aluminum and CRES.
2. Dimension “T (max)” is an installation dimension and not a design dimension.

FIGURE 9. Style J hose assembly dimensions.

Hose assembly dimensions for style K: See figure 10.

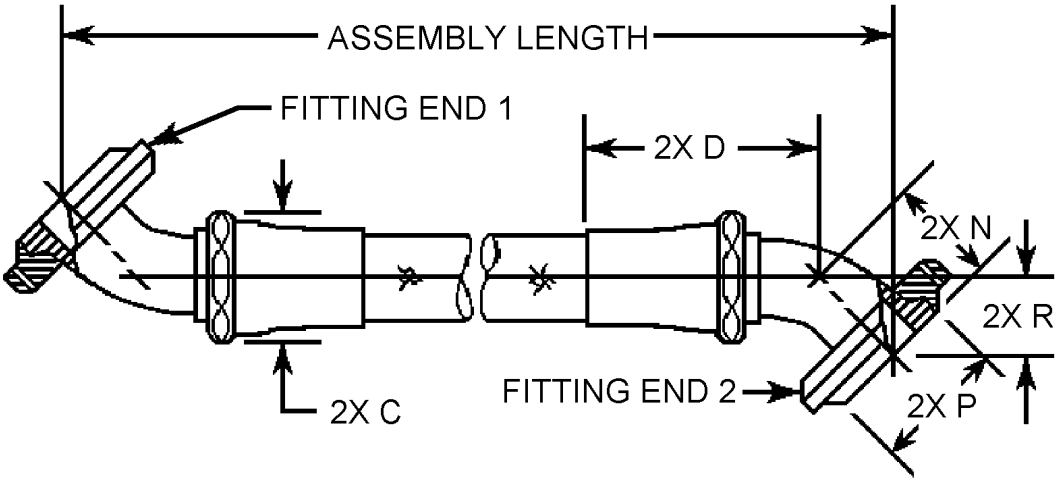

Fitting ends		Hose size	Dimensions					
1	2		C (max)	D (max)	N (max)	P (max)	R (min)	R (max)
45°	45°	8	.880	1.722	.606	.875	.303	.428
		10	.967	2.037	.658	1.000	.340	.465
		12	1.122	2.368	.789	1.250	.433	.558
		16	1.480	2.583	.929	1.500	.470	.657
		20	1.750	2.946	1.020	1.844	.534	.721
		24	2.150	3.210	1.186	2.125	.589	.839

NOTES:
1. Style K uses class 2 fittings which are made from a combination of aluminum and CRES.
2. Dimensions “N (max)” are installation dimensions and not design dimensions.

FIGURE 10. Style K hose assembly dimensions.

Hose assembly dimensions for style M: See figure 11.

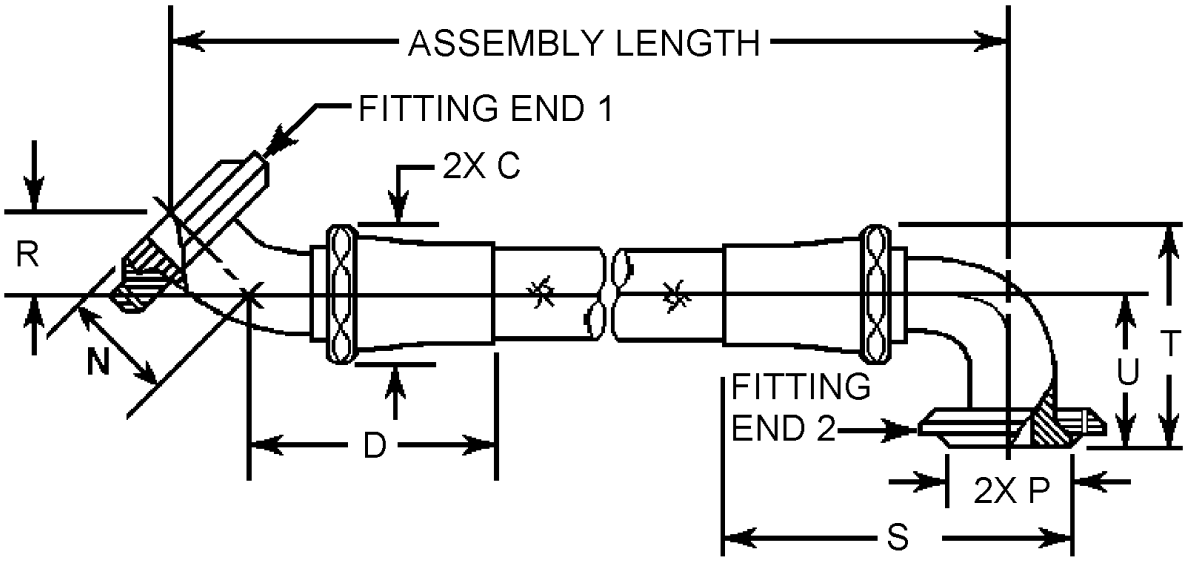

Fitting ends		Hose size	Dimensions									
1	2		C (max)	D (max)	N (max)	P (max)	R (min)	R (max)	S (max)	T (max)	U (min)	U (max)
45°	90°	8	.880	1.722	.606	.875	.303	.428	2.320	1.422	.857	.982
		10	.967	2.037	.658	1.000	.340	.465	2.875	1.499	.861	1.015
		12	1.122	2.368	.789	1.250	.433	.558	3.606	1.807	1.032	1.246
		16	1.480	2.583	.929	1.500	.470	.657	3.981	2.174	1.156	1.434
		20	1.750	2.946	1.020	1.844	.534	.721	4.435	2.590	1.344	1.715
		24	2.150	3.210	1.186	2.125	.589	.839	5.075	3.103	1.516	2.028

NOTES:
1. Style M uses class 2 fittings which are made from a combination of aluminum and CRES.
2. Dimension “T (max)” is an installation dimension and not a design dimension.

FIGURE 11. Style M hose assembly dimensions.

Hose assembly dimensions for style N: See figure 12.

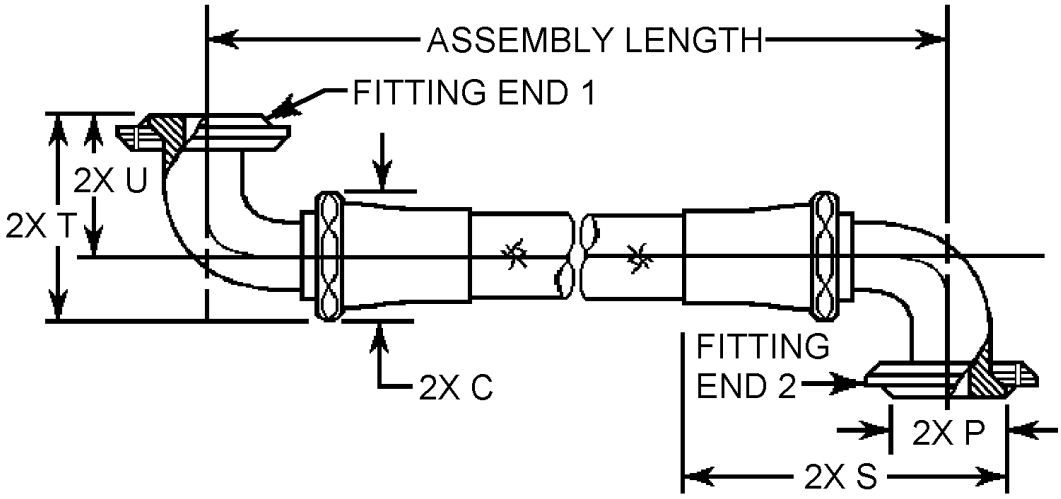

Fitting ends		Hose size	Dimensions					
1	2		C (max)	P (max)	S (max)	T (max)	U (min)	U (max)
90°	90°	8	.880	.875	2.320	1.422	.857	.982
		10	.967	1.000	2.875	1.499	.861	1.015
		12	1.122	1.250	3.606	1.807	1.032	1.246
		16	1.480	1.500	3.981	2.174	1.156	1.434
		20	1.750	1.844	4.435	2.590	1.344	1.715
		24	2.150	2.125	5.075	3.103	1.516	2.028

NOTES:
1. Style N uses class 2 fittings which are made from a combination of aluminum and CRES.
2. Dimension “T (max)”is an installation dimension and not a design dimension.

FIGURE 12. Style N hose assembly dimensions.

REQUIREMENTS:

Fittings: The swivel flange shall conform to MS20756. The nut threads shall be in accordance with SAE-AS8879.

Hose: Hose shall be in accordance with MIL-DTL-32435.

Hose assembly size code: See table I.

TABLE I. Hose assembly size code.

Size code	Size	Reference tube OD
H	8	.500
J	10	.625
K	12	.750
M	16	1.000
N	20	1.250
P	24	1.500

Elbow fittings: The ovality of the circular cross section within the angle of the bend of the elbow fitting shall not exceed 7.5% of the nominal tubing OD (see table II).

TABLE II. Elbow fitting ovality. 1/

Assembly size	8	10	12	16	20	24
Ball diameter	.313	.391	.515	.756	.969	1.188

1/ The fitting elbow bend shall be examined for ovality by rolling a ball of applicable diameter through the elbow fitting. The ball shall pass freely through the fitting elbow bend.

Assembly classification: Class 1 and class 2 hose assemblies, as specified in MIL-DTL-32434, have been incorporated into the Part or Identifying Number (PIN) as a part of styles.

Angular alignment: Hose assemblies with elbow fittings on each end shall have the angular orientation between the elbows measured counter-clockwise from the centerline of the nearest fitting, positioned at six-o'clock, to the centerline of the other fitting (see figure 13). When applicable, the angular alignment shall be expressed in three digits and specified in the PIN.

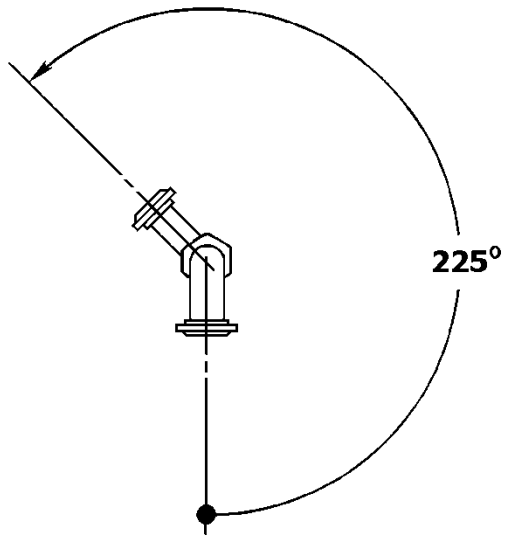

NOTE: Angular alignment shall be measured in degrees with a tolerance of ±2°.

FIGURE 13. Measurement of angular alignment between elbow fittings.

Protective sleeve: If required, the hose assembly shall include a protective sleeve (see table III) and its code shall be included in the PIN. Fire protective sleeve shall be subjected to testing in accordance with MIL-DTL-32434.

TABLE III. Protective sleeve code.

Code	Type
Blank	None
A	SAE-AS1072 sleeve, fire protection, silicone covered, temperature ranging from -65°F to 450°F and intermittently to 500°F, secured with CRES bands as required. 1/
B	SAE-AS1073 - code B sleeve, abrasion protection, heat shrinkable, black polyolefin, temperature ranging from -65°F to 250°F.
C	SAE-AS1291 - code A sleeve, chafe guard, extruded seamless white PTFE, temperature ranging from -65°F to 450°F, secured with CRES bands as required.
D	SAE-AS1291 - code C sleeve, chafe guard, extruded seamless transparent FEP, temperature ranging from -65°F to 350°F, secured with CRES bands as required.
E	SAE-AS1298 sleeve, heavy wall chafe guard, extruded seamless black PTFE, temperature ranging from -65°F to 450°F, secured with CRES bands as required.
L	Lock-wire hole
F	Code A + L
G	Code B + L
H	Code C + L
J	Code D + L
K	Code E + L

1/ To prevent wicking of fluids, the cut ends of the fire protective sleeve (code A) shall be coated with room temperature vulcanized (RTV) silicone rubber prior to installation. After installation, cracks and voids in the fire protective sleeve shall be coated with RTV rubber to prevent exposure of fiberglass.

Assembly length: Hose assembly shall be furnished in lengths as specified in the contract or purchase order (see figures 1 through 12); however, tolerances on the length of each hose assembly shall be as follows:

a. ±1/8 inch for lengths under 18 inches.
b. ±1/4 inch for lengths from 18 inches to 36 inches.
c. ±1/2 inch for lengths from 36 inches to 50 inches.
d. ±1% for lengths over 50 inches.

PIN: The PIN consists of letter M, specification sheet number, hose size code, hose length in inches and an eighths of an inch, hose assembly style, sleeve code, and angular alignment in degree between elbow fittings.

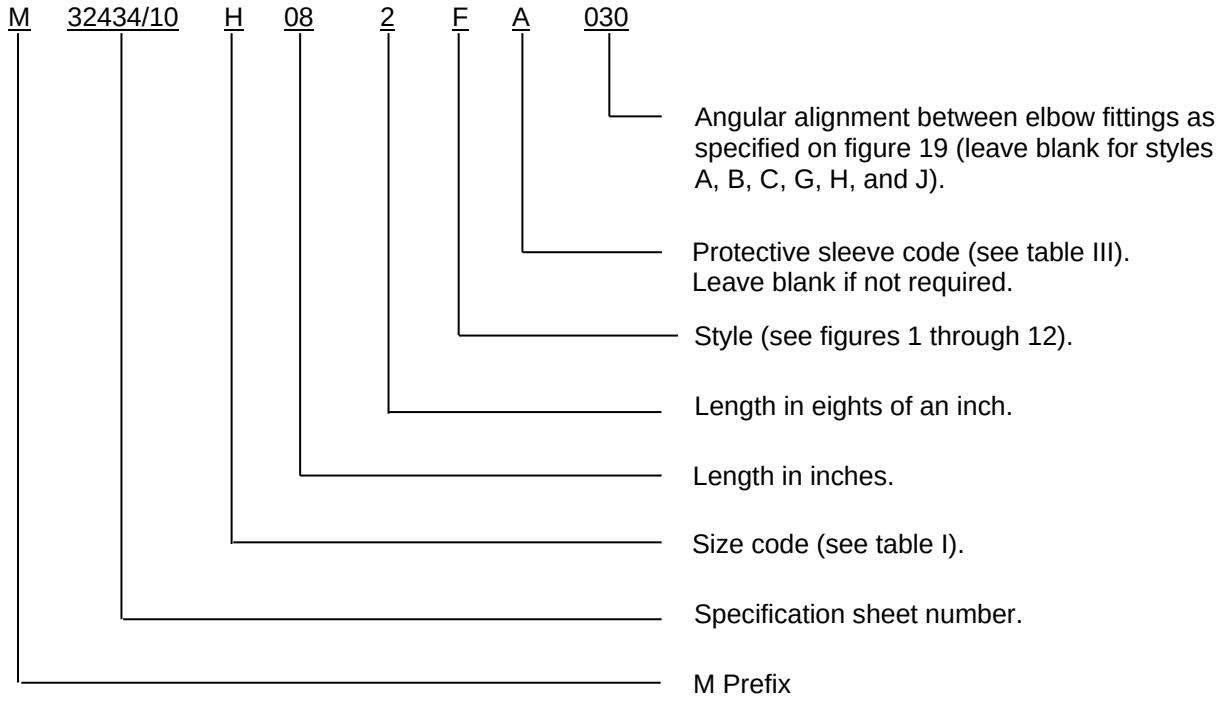

Example: M32434/10H082FA030 represents 1/2inch OD PTFE convoluted hose assembly, 8.25 inches long, flare-to-flare permanently attached fittings with fire protective sleeve and 30° angular alignment between elbows.

Referenced documents. In addition to MIL-DTL-32434, this document references the following:

MIL-DTL-32435
MS20756
SAE-AS1072
SAE-AS1073
SAE-AS1291
SAE-AS1298
SAE-AS8879

CONCLUDING MATERIAL

Custodians:
Army - AV
Navy - AS
Air Force - 99
DLA - CC

Review activities:
Army - AR, AT, EA, MI
Navy - MC, SA, SH
Air Force - 70

NOTE: The activities listed above were interested in this document as of the date of this document. Since organizations and responsibilities can change, you should verify the currency of the information above using the ASSIST Online database at https://assist.dla.mil.

Preparing activity:
DLA - CC

(Project 4720-2012-028)