DETAIL SPECIFICATION SHEET

FITTINGS, HYDRAULIC TUBE, SPHERICAL TO ORFS, MALE ADAPTER, 90° ELBOW, BULKHEAD

This specification is approved for use by all Departments and Agencies of the Department of Defense.

The requirements for acquiring the product described herein shall consist of this specification sheet and MIL-DTL-32371.

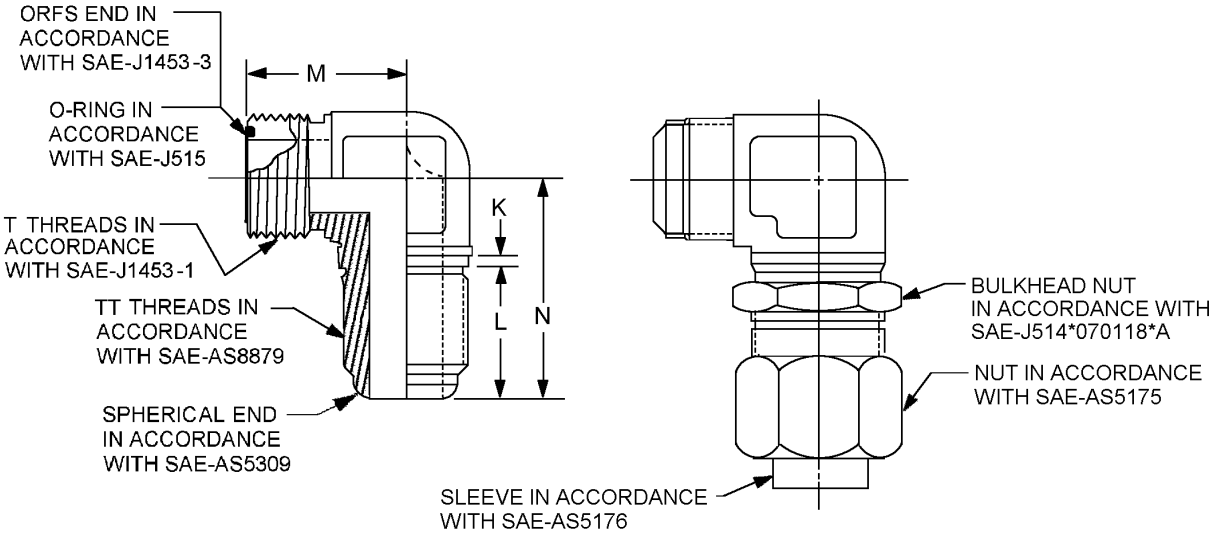

Suffix designator	Tube OD nom. inches (mm)	T ORFS thread	TT spherical Thread	C Hex flat nom.	L inches (mm) ±.020 (0.51)
-4	.2500 (6.350)	0.5625-18UNF-2A	.4375 - 20 UNJF-3A	1/2	1.020 (25.91)
-6	.3750 (9.525)	0.6875-16UN-2A	.5000-20 UNJF-3A	5/8	1.090 (27.69)
-8	.5000 (12.700)	0.8125-16UN-2A	.7500-16 UNJF-3A	13/16	1.250 (31.75)
-10	.6250 (15.875)	1.0000-14UN-2A	.8750-14 UNJF-3A	15/16	1.390 (35.31)
-12	.7500 (19.050)	1.1875-12UN-2A	1.0625-12 UNJ-3A	1 1/8	1.590 (40.39)
-16	1.0000 (25.400)	1.4375-12UN-2A	1.3125-12 UNJ-3A	1 3/8	1.560 (39.62)
-20	1.2500 (31.750)	1.6875-12UN-2A	1.6250-12 UNJ-3A	1 11/16	1.610 (40.89)
-24	1.5000 (38.100)	2.0000-12UN-2A	1.8750-12 UNJ-3A	2	1.620 (41.15)

FIGURE 1. 45° elbow, bulkhead, spherical to ORFS adapter.

Suffix designator	K inches (mm) ±.020 (0.51)	M inches (mm) ±.030 (0.76)	N inches (mm) ±.030 (0.76)
-4	.094 (2.39)	1.531 (38.89)	.720 (18.29)
-6	.094 (2.39)	1.672 (42.47)	.830 (21.08)
-8	.125 (3.18)	1.938 (49.23)	.980 (24.89)
-10	.125 (3.18)	2.172 (55.17)	1.110 (28.19)
-12	.125 (3.18)	2.438 (61.93)	1.280 (32.51)
-16	.125 (3.18)	2.562 (65.07)	1.470 (37.34)
-20	.125 (3.18)	2.656 (67.46)	1.590 (40.39)
-24	.125 (3.18)	2.672 (67.87)	1.780 (45.21)

NOTES:
1. Dimensions are in inches.
2. Metric equivalents are given for information only.
3. Break all sharp edges and remove all burrs and slivers.
4. Dimensions and tolerances not shown shall be in accordance with SAE-AS5309 for spherical, 37° flared end, SAE-J1453-3 for ORFS end, and SAE-J514 for body.
5. The drawing is for identification purposes only and is not intended to restrict designs and shapes not dimensioned.

FIGURE 1. 45° elbow, bulkhead, spherical to ORFS adapter - Continued.

REQUIREMENTS:

Fittings shall be as specified on figure 1 and in table I.

Materials shall be in accordance with MIL-DTL-32371.

Finish. Finishes shall be as specified in table I. All platings shall be capable of meeting a minimum of 96 hours salt spray test in accordance with ASTM B117. The fittings shall show no evidence of corrosion after 96 hours of salt spray. Fluid passages, other openings, and internal threads shall not be subject to the plating thickness requirement and may have bare areas provided they are protected with a light film of oil.

TABLE I. Material and chemical finish identification codes and chemical finish reference specifications. 1/

PIN code material/plating finish	Material	Plating finish
Blank	Steel	Cadmium plating in accordance with SAE-AMS-C-81562, type II, class 3 or SAE-AMS-QQ-P-416, type II, class 2. 2/
CN		Cadmium plating in accordance with SAE-AMS-C-81562, type II, class 3 or SAE-AMS-QQ-P-416, type II, class 2 with NAVAIR trivalent chromium pretreatment (TCP) in accordance with MIL-DTL-81706, type II, class 1A.
E		NAVAIR TCP in accordance with MIL-DTL-81706, type II, class 1A.
F	Steel	Zinc plate (finish J, P, or R) with NAVAIR TCP in accordance with MIL-DTL-81706, type 2, class A.
H	Steel	Aluminum-nickel in accordance with ASTM F1136/F1136M, grade 3, NC.
J	Steel	Zinc-nickel in accordance with SAE-AMS2417, type 2, grade B.
M	Nickel-copper alloy UNS N04400	No additional finish.
N	High-chromium nickel alloy UNS N06690	No additional finish.
P	Steel	Zinc phosphate finish in accordance MIL-DTL-16232 type Z, class1.
R	Steel	Zinc plating in accordance with ASTM B633; type VI, Fe/Zn 5. 3/
S	Corrosion resistant steel	No additional finish. Passivation in accordance with SAE-AMS2700, type 6 or 7.
T	Titanium 4/	Anodize in accordance with SAE-AMS2488 type 2.
TF		Fluoride phosphate in accordance with SAE-AMS2486.
Z	Steel	Zinc plating in accordance with ASTM B633; type II or III, Fe/Zn 5, or ASTM B695, type II, class 5.
ZN	Steel	Zinc plating in accordance with ASTM B633; type II or III, Fe/Zn 5, or ASTM B695, type II, class 5 with NAVAIR TCP in accordance with MIL-DTL-81706, type II, class 1A.

1/ Table is for Part or Identifying Number (PIN) code use only. Materials and finishes shall be in accordance with MIL-DTL-32371.
2/ Hydrogen embrittlement relief test need not be run.
3/ Hexavalent chromium free.
4/ Titanium shall not be used in oxygen or potable water systems.

Trivalent wrenchability. When the finish has been damaged due to poor wrenchability, the surface of the connector shall be touched up using the brush plating process below. The term “trivalent wrenchability” is used to evaluate the ability of the finish to withstand abrasion from an excessive amount of wrenching.

a. Brush plating of hard chromium by electrodeposition shall be in accordance with SAE-AMS2451/5.
b. Brush plating of medium-hardness, low stress nickel by electrodeposition shall be in accordance with SAE-AMS2451/9.
c. Brush plating of NAVAIR TCP shall be in accordance with MIL-DTL-81706, type II, class 1A, material form 1 through 6, application method B. Example of a PIN: M817062A6B.

Maximum operating pressure. Maximum operating pressure shall be in accordance with MIL-DTL-32371.

PIN: The PIN consists of the letters “MS”, the specification number, a letter and number for adapter size, a letter for material finish designator, and the number 1 for an inverted flare.

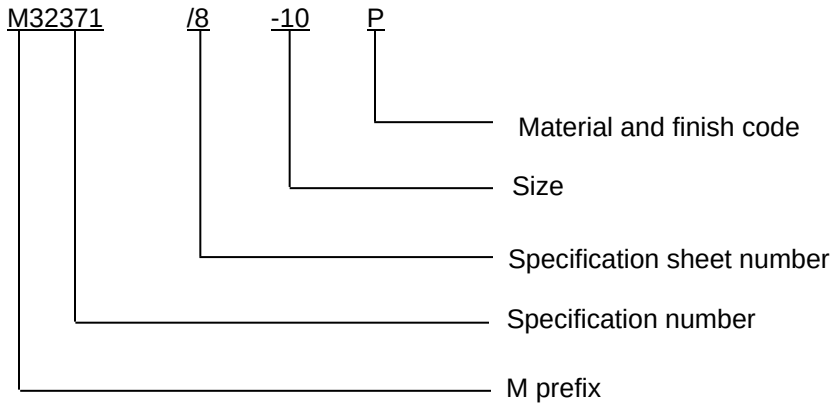

PIN example: M32371/8-10P indicates a 90° elbow, bulkhead adapter, .6250 inch (.1588 mm), steel with NAVAIR TCP.

O-ring is not supplied order separately, see SAE-J515.

Cadmium is not recommended. To the users of this document, it is recommended that the use of carbon steel material with cadmium plating be used only when other materials and finishes specified in this document cannot meet performance requirements.

Referenced documents. In addition to MIL-DTL-32371, this document references the following:

MIL-DTL-16232	SAE-AMS-QQ-P-416	SAE-AS8879
MIL-DTL-81706	SAE-AMS2417	SAE-AS5175
ASTM B117	SAE-AMS2451/5	SAE-AS5176
ASTM B633	SAE-AMS2451/9	SAE-AS5309
ASTM B695	SAE-AMS2486	SAE-J514
ASTM F1136/F1136M	SAE-AMS2488	SAE-J515
SAE-AMS-C-81562	SAE-AMS2700	SAE-J1453-1
		SAE-J1453-3

CONCLUDING MATERIAL

Custodians:
Army - AT
Navy - AS
Air Force - 99
DLA - CC

Review activities:
Army - AR
Navy - CG, MC, SA, SH
Air Force - 71

Preparing activity:
DLA - CC

(Project 4730-2010-009)

NOTE: The activities listed above were interested in this document as of the date of this document. Since organizations and responsibilities can change, you should verify the currency of the information above using the ASSIST Online database at https://assist.daps.dla.mil.