DETAIL SPECIFICATION SHEET

CONNECTOR, ELECTRICAL, ULTRA HIGH DENSITY, MODULAR, BLADE AND FORK, DAUGHTER BOARD, EIGHT ROW, 372 CONTACT POSITIONS

This specification is approved for use by all Departments and Agencies of the Department of Defense.

The requirements for acquiring the product described herein shall consist of this specification sheet and MIL-DTL-32234.

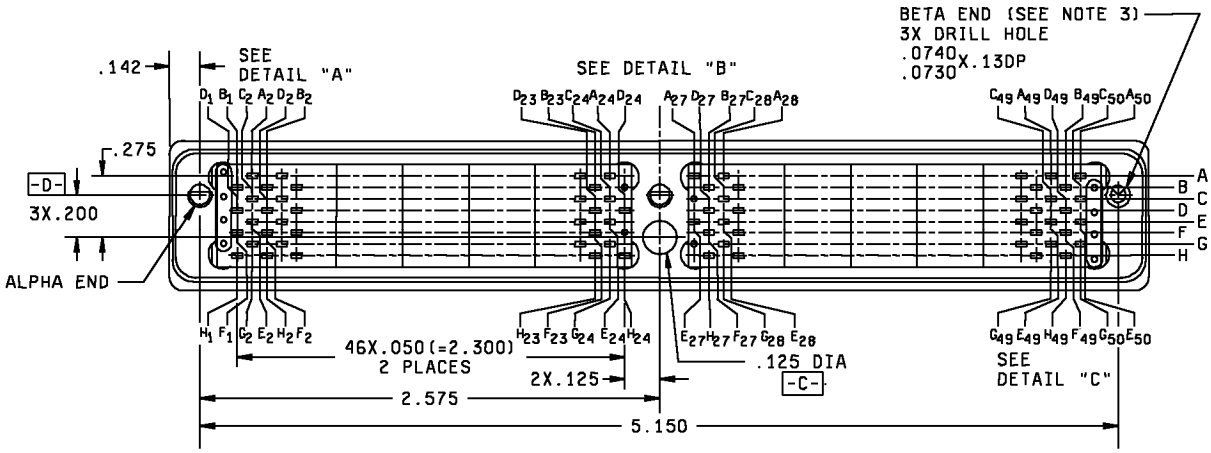

FIGURE 1. Connector face view.

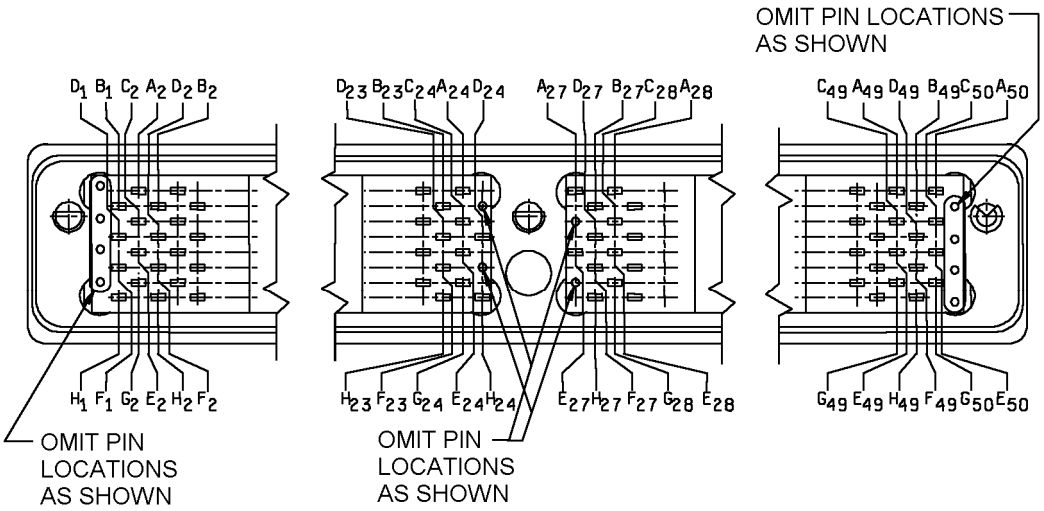

DETAIL "A" DETAIL "B" DETAIL "C"

Inches	mm	Inches	mm
.050	1.27	.200	5.08
.0730	1.83	.275	6.99
.0740	1.88	2.300	58.42
.125	3.18	2.575	65.41
.13	3.30	5.150	130.81
.142	3.61		

NOTES:
1. Dimensions are in inches.
2. Metric equivalents are for information only.
3. Unless otherwise specified, tolerances for 2 place decimals are ±.01 inch (0.3 mm), 3 place decimals are ±.005 inch (0.13 mm).
4. Keying pins shown for clarity only.

FIGURE 1. Connector face view – Continued.

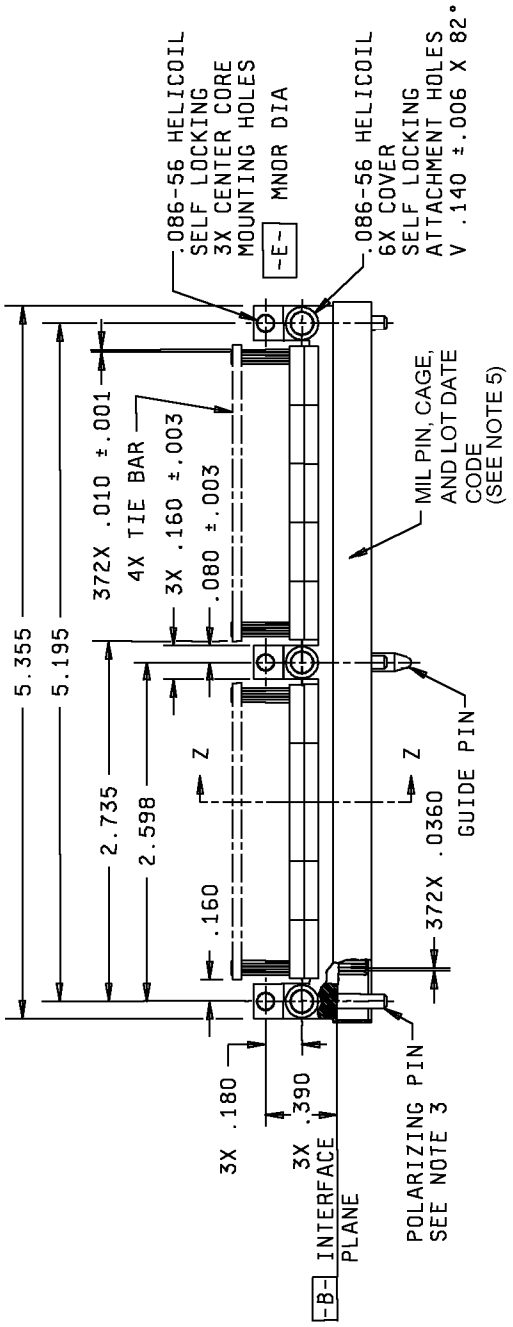

Inches	mm
.001	0.03
.003	0.08
.010	0.25
.0360	0.91
.080	2.03
.160	4.06
.180	4.57
.390	9.91
2.598	65.99
2.810	71.37
5.195	131.95
5.355	136.02

NOTES:

1. Dimensions are in inches.
2. Metric equivalents are given for information only.
3. Polarizing pin shown for clarity only,
4. Unless otherwise specified, tolerances for 2 place decimals are ±.01 inch (0.3 mm), 3 place decimals are ±.005 inch (0.13 mm).
5. Part or Identifying Number (PIN).

FIGURE 2. Connector top view.

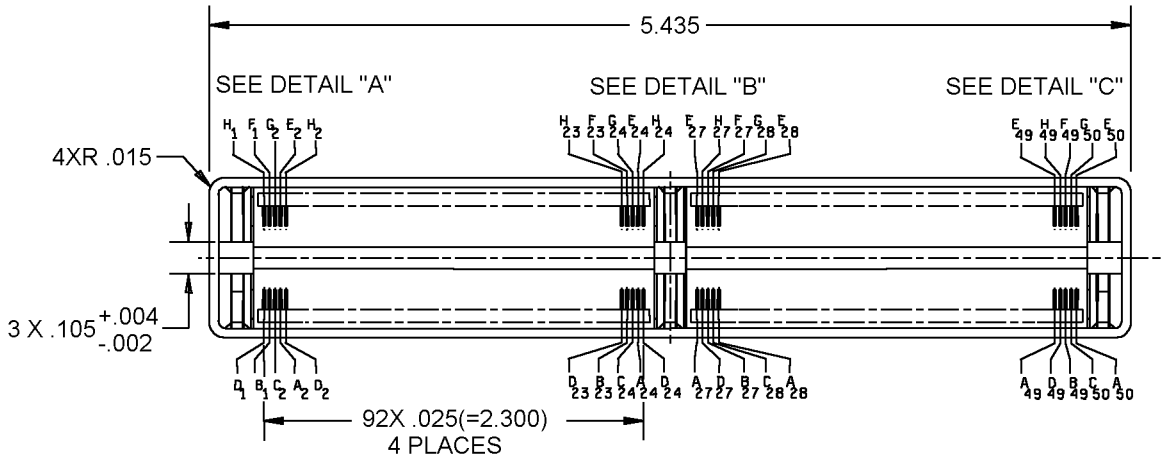

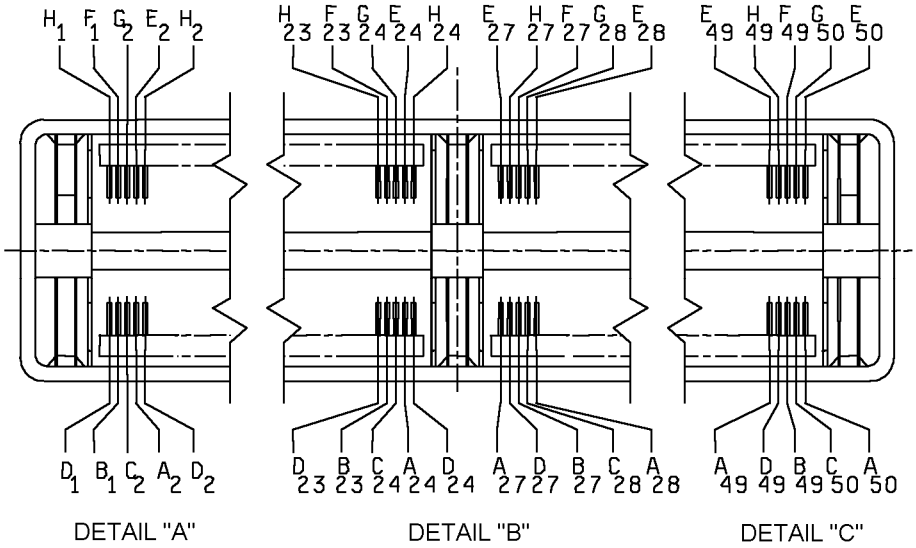

Inches	mm
.002	0.05
.004	0.10
.015	0.38
.025	0.64
.105	2.67
5.435	138.05

NOTES:

1. Dimensions are in inches.
2. Metric equivalents are given for information only.
3. Unless otherwise specified, tolerances for 2 place decimals are ±.01 inch (0.3 mm), 3 place decimals are ±.005 inch (0.13 mm).

FIGURE 3. Connector rear view.

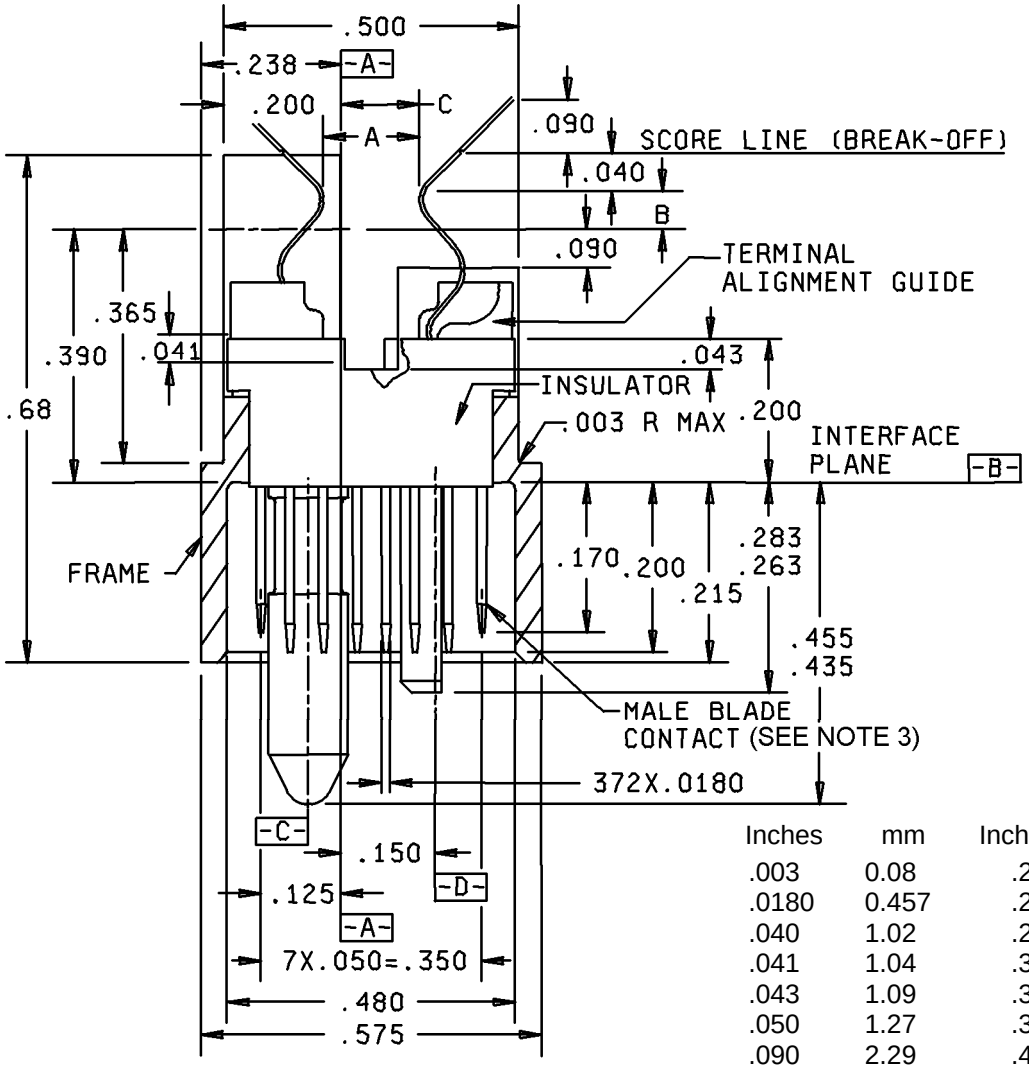

Inches	mm	Inches	mm
.003	0.08	.238	6.05
.0180	0.457	.263	6.68
.040	1.02	.283	7.19
.041	1.04	.350	8.89
.043	1.09	.365	9.27
.050	1.27	.390	9.91
.090	2.29	.435	11.05
.125	3.18	.455	11.56
.150	3.81	.475	12.07
.170	4.32	.480	12.19
.200	5.08	.575	14.61
.215	4.32	.68	17.27

NOTES:

1. Dimensions are in inches.
2. Metric equivalents are given for information only.
3. Pin lengths may be either 4 rows with a .170 inch (4.32 mm) pin extension and 4 rows with a .200 inch (5.08 mm) pin extension or 2 outside rows at .170 inch (4.32 mm) pin extension and the 6 inside rows at .200 inch (5.08 mm) pin extension.
4. See table I for A, B, and C dimensions.
5. Unless otherwise specified, tolerances for 2 place decimals are ±.01 inch (0.3 mm), 3 place decimals are ±.005 inch (0.13 mm); angular tolerance is ±0°30'.

FIGURE 4. Connector cross sectional view.

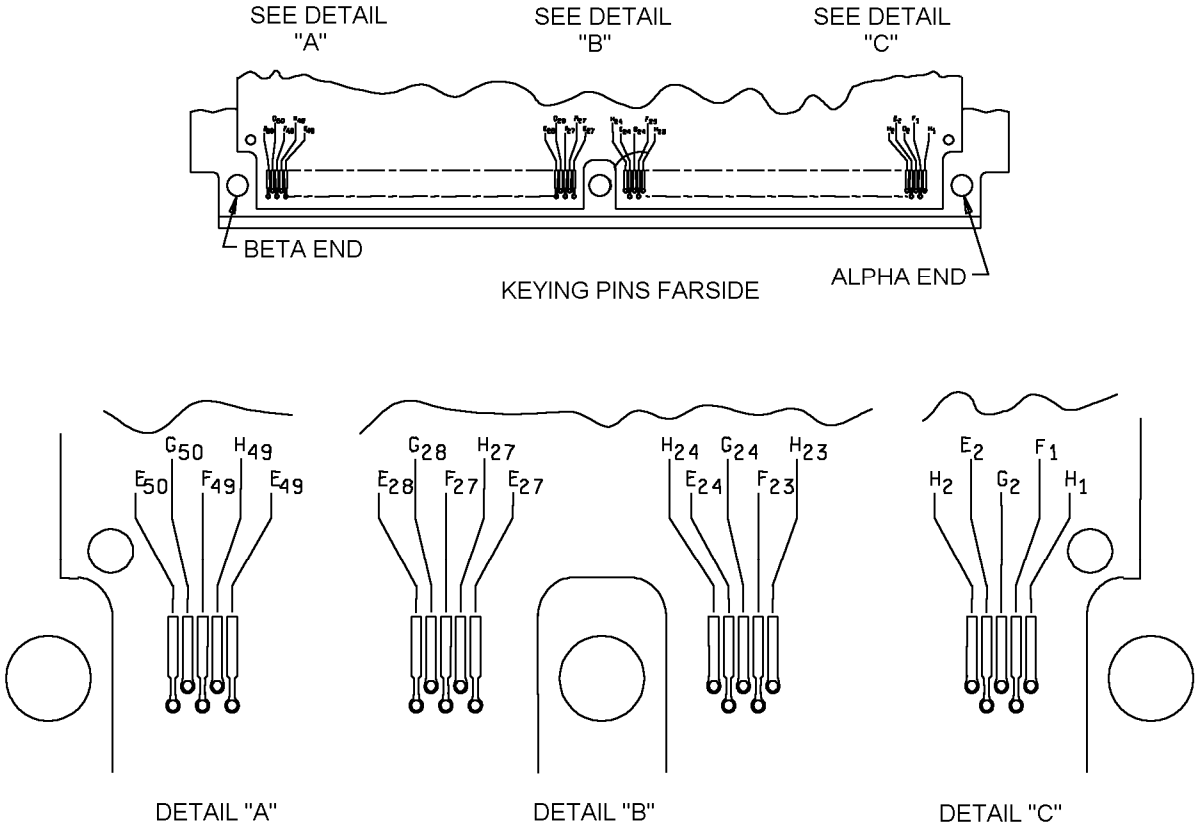

TYPICAL BOARD AND HEATSINK LAYOUT (FARSIDE)

FIGURE 5. Circuit board layout.

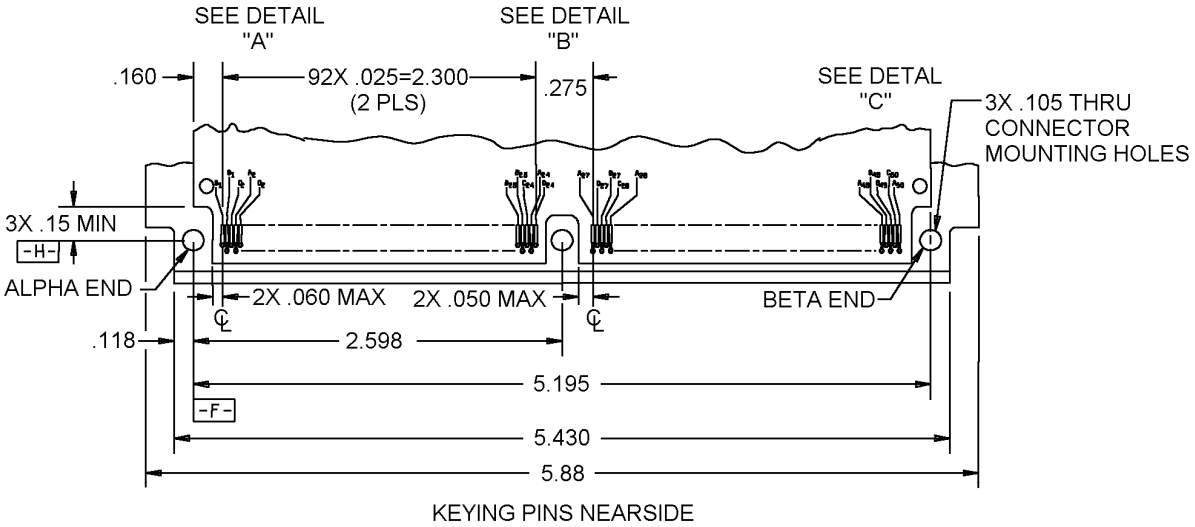

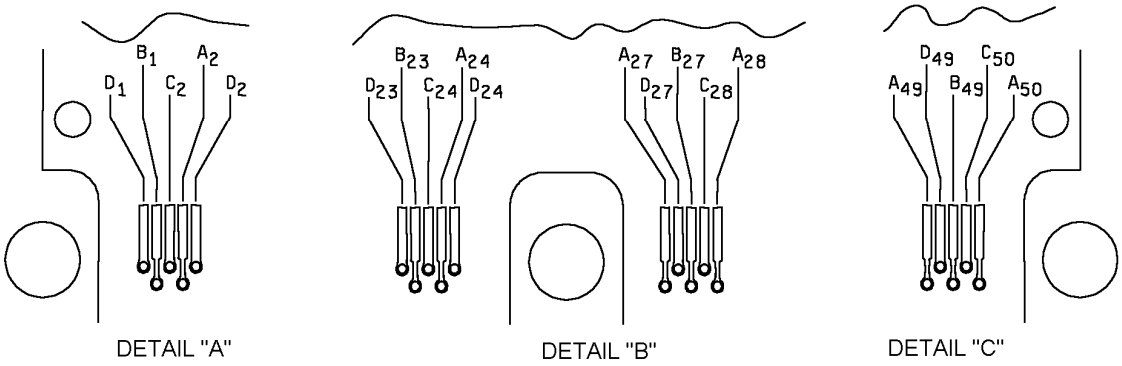

TYPICAL BOARD AND HEATSINK LAYOUT (NEARSIDE)

Inches	mm	Inches	mm
.025	0.64	.160	4.06
.050	1.27	.275	6.99
.060	1.52	2.300	58.42
.105	2.67	5.195	131.95
.118	3.00	5.430	137.92
.15	3.81	5.88	149.35

NOTES:

1. Dimensions are in inches.
2. Metric equivalents are given for information only.
3. Unless otherwise specified, tolerances for 2 place decimals are ±.01 inch (0.3 mm), 3 place decimals are ±.005 inch (0.13 mm).

FIGURE 5. Circuit board layout -Continued.

REQUIREMENTS:

Dimensions and configurations: The design, construction, and physical dimensions shall be as specified on figures 1, 2, 3, 4, 5, and MIL-DTL-32234. In case of conflict between this drawing and MIL-DTL-32234, this drawing shall govern.

Termination: Connectors are surface mount solder termination.

Mating connectors: These connectors mate with backpanel mounted connectors in accordance with MIL-DTL-32234/5.

PIN example:

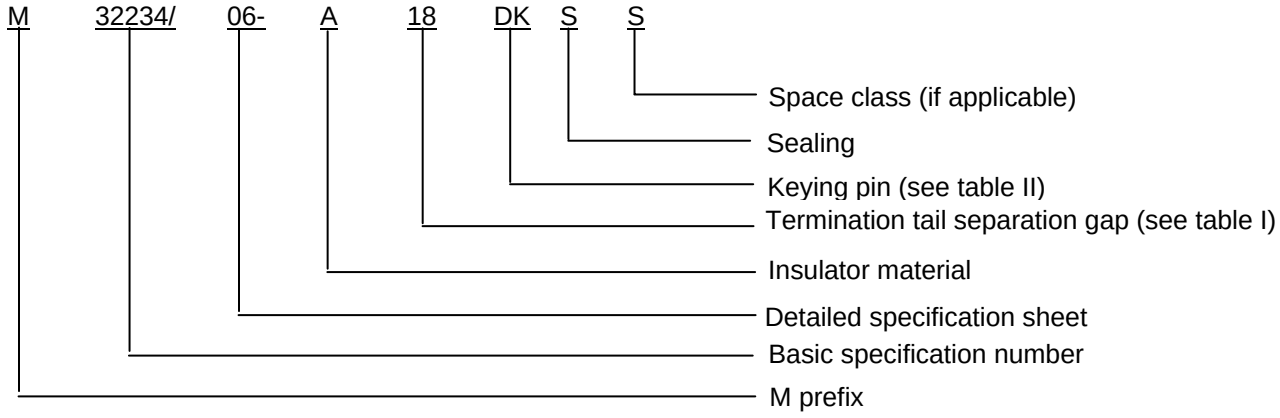

Insulator material. Insulator material shall be fabricated using one of the following plastic materials:

A - Thermoplastic, type GST-40F in accordance with MIL-M-24519, or ASTM D4067.
B - Thermoplastic, type GLCP-30 F in accordance with MIL-M-24519, or ASTM D5138.
C - Glass filled diallyl phthalate type SDG-F or GDI-30F in accordance with ASTM D5948.

Termination tail separation (gap). The PIN will include a number as specified in table I, which will identify the connector termination configuration.

TABLE I. Termination tail separation (gap). 1/ 2/

Terminal type	Gap A dim Inches (mm)	B dim ±.015 (0.38 mm) inches (mm)	C dim ref inches (mm)
18	.118 (3.00) to .148 (3.76)	.050 (1.27)	.117 (2.97)
38	.138 (3.51) to .168 (4.27)	.048 (1.22)	.127 (3.23)
40	.140 (3.56) to .170 (4.32)	.048 (1.22)	.129 (3.28)
58	.158 (4.01) to .188 (4.78)	.046 (1.17)	.137 (3.48)
75	.175 (4.44) to .205 (5.21)	.044 (1.12)	.145 (3.68)
01	.201 (5.11) to .231 (5.87)	.039 (0.99)	.158 (4.01)
53	.053 (1.35) to .083 (2.11)	.052 (1.32)	.084 (2.13)
84	.184 (4.67) to .214 (5.44)	.043 (1.09)	.149 (3.78)

1/ Dimensions are in inches.
2/ Metric equivalents are given for information only.

Keying pins. The PIN will contain a single character for this feature (see table II).

TABLE II. Keying feature. 1/

Designator	Key or bushing type
DK	“D” keying pin
PK	“PIE” keying pin
DB	“D” keying bushing
PB	“PIE” keying bushing
SP	To be ordered separately (see MIL-DTL-32234/9)

1/ For dimensions and configurations, see MIL-DTL-32234/9.

Sealing. The PIN will contain a single character to indicate if the connector termination area is sealed from the contact blades, which extend above the connector insulator blocks.

N - Not sealed.
S - Sealed or molded in.

Space class.

S - Space class. Thermal vacuum outgassing testing required. OEM is to specify acceptable test specification and outgassing requirements/limits.
Blank - For non-space applications.

Module displacement force. The connector shall allow for cold-wall clamping of attached daughter card modules. The connector shall require 75 pounds (34 kg) minimum to displace the connector frame .003 inches (0.08 mm) laterally for single-sided mounting ears (non-float mount) and .006 inches (0.15 mm) for double-sided mounting ears (float mount) in either direction when tested in accordance with MIL-DTL-32234. No degradation of performance shall be allowed after this test.

Connector materials.

Material requirements. The materials to be used in construction and fabrication shall be as specified herein. Materials required, but not specified in this slash sheet shall be in accordance with MIL-DTL-32234.

Referenced documents. In addition to MIL-DTL-32234, this document references the following:

MIL-DTL-32234/5	ASTM D4067
MIL-DTL-32234/9	ASTM D5138
MIL-M-24519	ASTM D5948

CONCLUDING MATERIAL

Custodians:
Army - CR
Navy - EC
Air Force - 11
DLA - CC

Preparing activity:
DLA - CC

(Project 5935-4829-006)

NOTE: The activities listed above were interested in this document as of the date of this document. Since organizations and responsibilities can change, you should verify the currency of the information above using the ASSIST Online database at http://assist.daps.dla.mil.