DETAIL SPECIFICATION SHEET

CONNECTOR, ELECTRICAL, ULTRA HIGH DENSITY, MODULAR, BLADE AND FORK, BACKPANEL, EMI/RFI SHIELDING, EIGHT ROW, 196 PINS

This specification is approved for use by all Departments and Agencies of the Department of Defense.

The requirements for acquiring the product described herein shall consist of this specification sheet and MIL-DTL-32234.

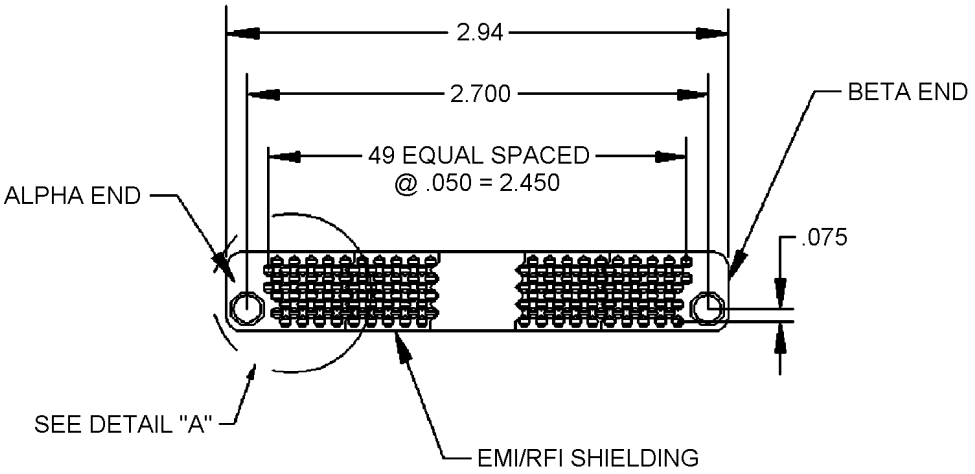

FRONT VIEW

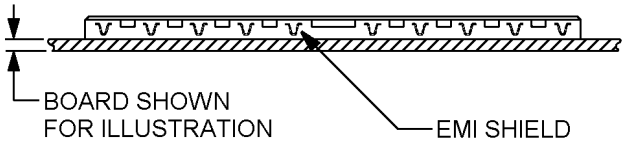

Inches	mm
.050	12.70
.075	19.05
2.450	62.23
2.700	68.58
2.94	74.68

NOTES:
1. Dimensions are in inches.
2. Metric equivalents are given for information only.
3. Unless otherwise specified, tolerances for 2 place decimals are ±.01 inch (0.3 mm), 3 place decimals are ±.005 inch (0.13 mm).
4. Electromagnetic interference/radio frequency interference (EMI/RFI) shield is optional, see Part or Identifying Number (PIN).

FIGURE 1. Connector face view.

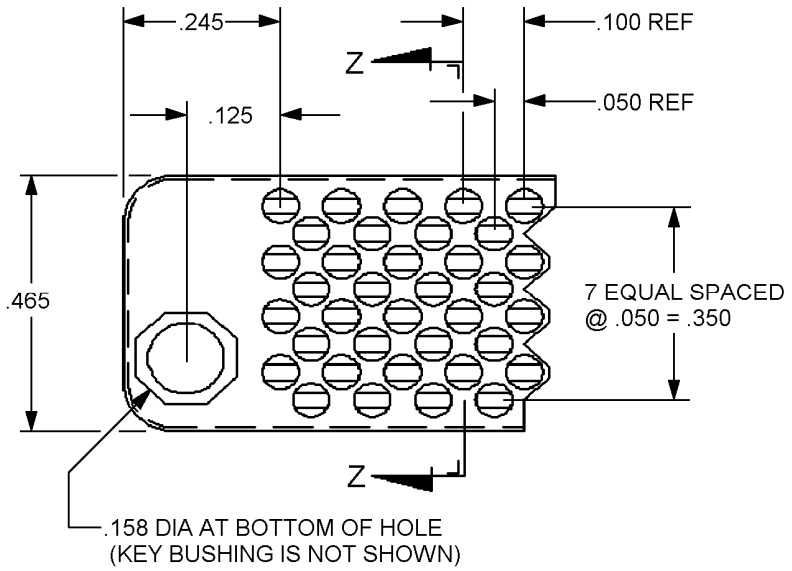

DETAIL "A"

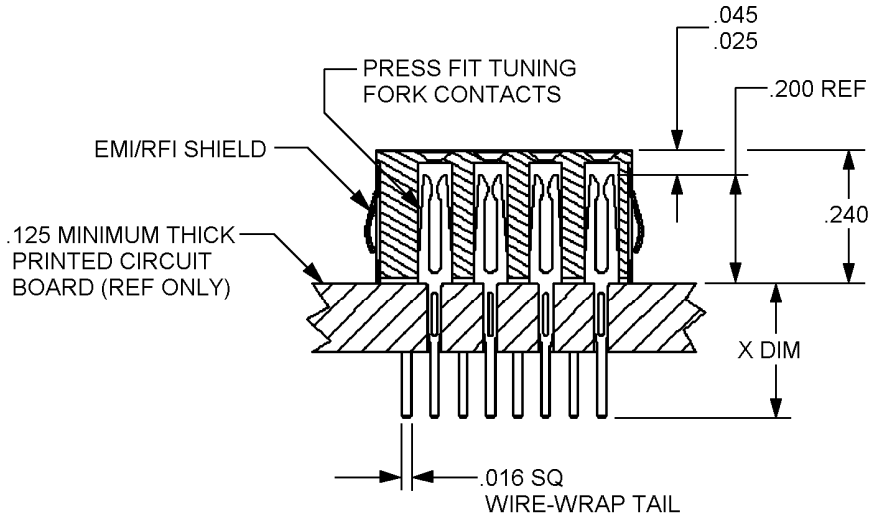

Inches	mm
.016	0.41
.025	0.64
.045	1.14
.050	1.27
.100	2.54
.125	3.18
.158	4.01
.200	5.08
.240	6.10
.245	6.22
.350	8.89
.465	11.81

SECTION Z-Z

(SHOWN INSTALLED IN PWB, ROTATED 90° CW)

(See table I for X dimension)

NOTES:
1. Dimensions are in inches.
2. Metric equivalents are given for information only.
3. Unless otherwise specified, tolerances for 2 place decimals are ±.01 inch (0.3 mm), 3 place decimals are ±.005 inch (0.13 mm).

FIGURE 2. Connector cross sectional view.

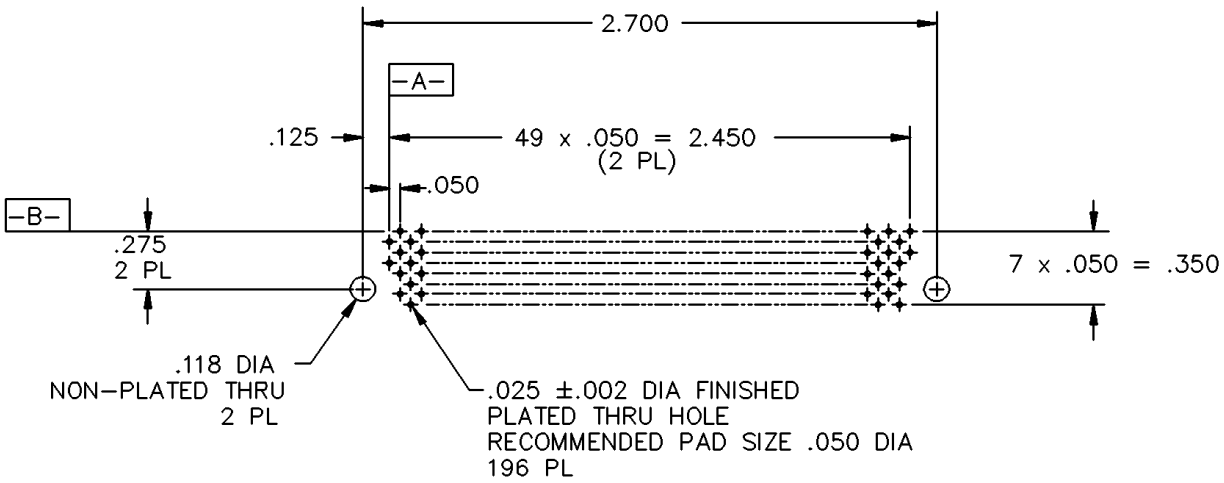

PRINTED CIRCUIT BACKPLANE GRID LAYOUT
(CONNECTOR SIDE)

Inches	mm
.002	0.05
.025	0.64
.050	1.27
.118	3.00
.125	3.18
.275	6.99
.350	8.89
2.450	62.23
2.700	68.58

NOTES:
1. Dimensions are in inches.
2. Metric equivalents are given for information only.
3. Unless otherwise specified, tolerances for 2 place decimals are ±.01 inch (0.3 mm), 3 place decimals are ±.005 inch (0.13 mm).

FIGURE 3. Printed wiring board layout.

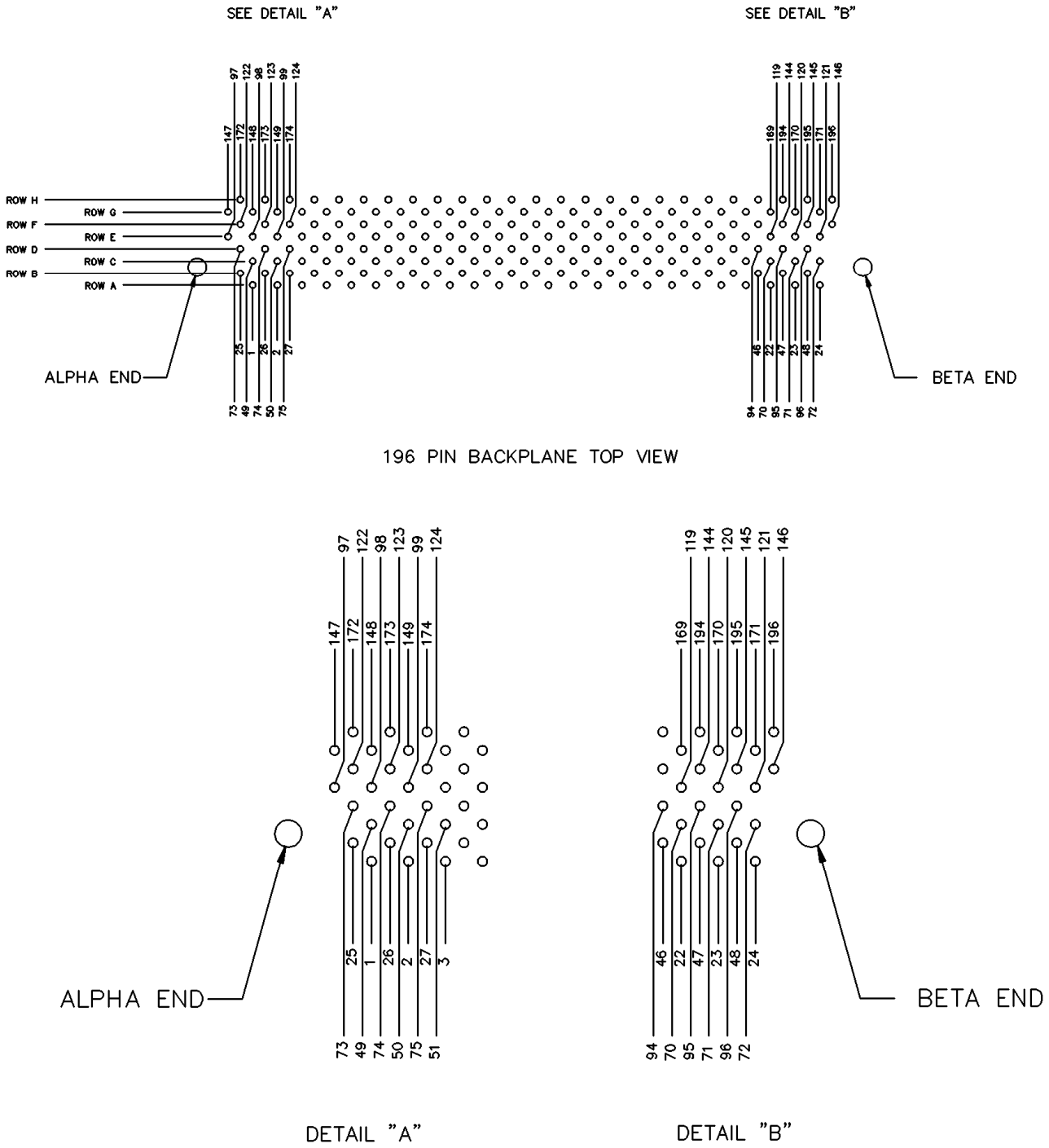

FIGURE 3. Printed wiring board layout - Continued.

REQUIREMENTS:

Dimensions and configuration: The design, construction, and physical dimensions shall be as specified on figures 1, 2, 3, and MIL-DTL-32234.

Termination: Pins are printed wiring board terminated.

Wire wrap: 30 AWG wire.

Mating connectors: These connectors mate with backplane mounted connectors specified in MIL-DTL-32234/4.

PIN example:

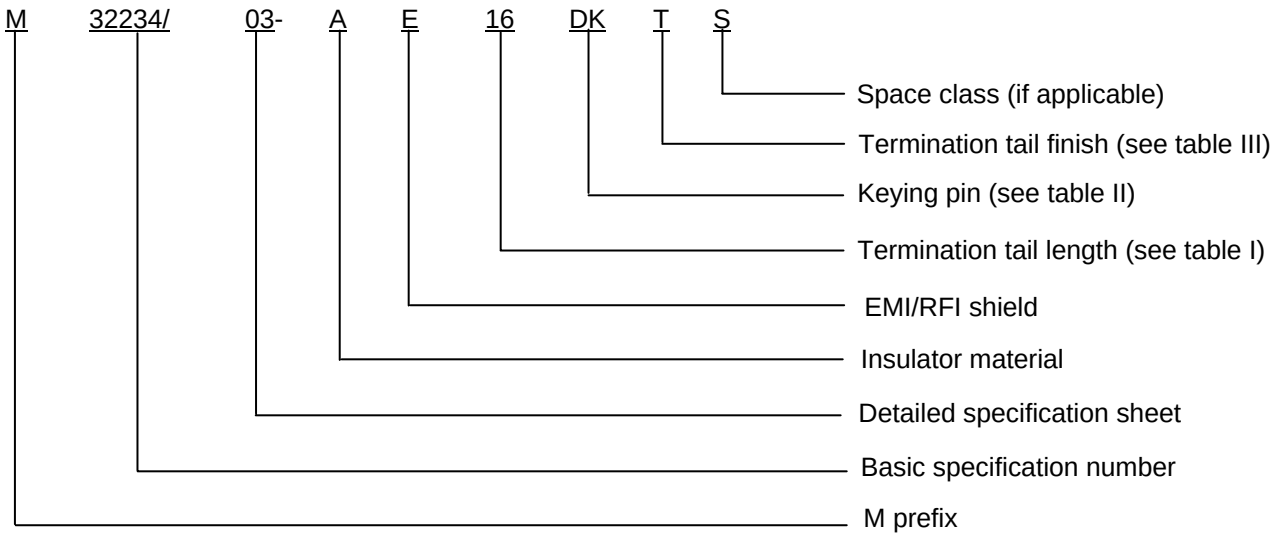

Insulator material. Insulator material shall be fabricated with thermoplastic, type GPT-30F in accordance with MIL-M-24519.

EMI/RFI shield. The PIN will include a letter, which will identify if an EMI/RFI shield is required.

N - No shield
E - EMI/RFI shield

Termination tail length. The PIN will include as specified in table I, which will identify the termination tail length, allowing for use in various thickness backplanes, and also possible additional wire wrapping of the termination tails.

TABLE I. Termination tail length. 1/ 2/

Termination tail length	Length X dimension inches (mm) 3/
16	.160 (4.06)
22	.220 (5.59)
31	.310 (7.87)
35	.350 (8.89)
40	.400 (10.16)
49	.490 (12.45)

1/ Dimensions are in inches.
2/ Metric equivalents are given for information only.
3/ X dimension is a reference dimension only.

Keying pins. The PIN will contain a single character for this feature (see table II).

TABLE II. Keying feature. 1/

Designator	Key or bushing type
DK	“D” keying pin
PK	“PIE” keying pin
DB	“D” keying bushing
PB	“PIE” keying bushing
SP	To be ordered separately (see MIL-DTL-32234/9)

1/ For dimensions and configurations, see MIL-DTL-32234/9.

Termination tail finish. The pin will contain a single letter for the termination tail finish (see table III).

TABLE III. Termination tail finish.

Designator	Termination tail finish
T	Tin-lead
G	Gold

Space class.

S - Space class. Thermal vacuum outgassing testing required. OEM is to specify acceptable test specification and outgassing requirements/limits.
Blank - For non-space applications.

Material requirements. The materials to be used in construction and fabrication shall be as specified herein. Materials required, but not specified in this slash sheet shall be in accordance with MIL-DTL-32234.

Mating and unmating force. Mating and unmating force requirements for connector, shells, guide pins are to be determined.

Referenced documents. In addition to MIL-DTL-32234, this document references the following:

MIL-DTL-32234/4
MIL-DTL-32234/9
MIL-M-24519

CONCLUDING MATERIAL

Custodians:
Army - CR
Navy - EC
Air Force - 11
DLA - CC

Preparing activity:
DLA - CC

(Project 5935-4829-003)

NOTE: The activities listed above were interested in this document as of the date of this document. Since organizations and responsibilities can change, you should verify the currency of the information above using the ASSIST Online database at http://assist.daps.dla.mil.