INCH-POUND

MIL-DTL-28875/6C
20 January 2015
SUPERSEDING
MIL-DTL-28875/6B
15 June 2010

DETAIL SPECIFICATION SHEET

AMPLIFIERS, RADIO-FREQUENCY AND MICROWAVE, SOLID-STATE, LOW NOISE, WIDEBAND, COAXIAL CONFIGURATION

This specification is approved for use by all Departments and Agencies of the Department of Defense.

The requirements for acquiring the amplifiers described herein shall consist of this specification sheet and MIL-DTL-28875.

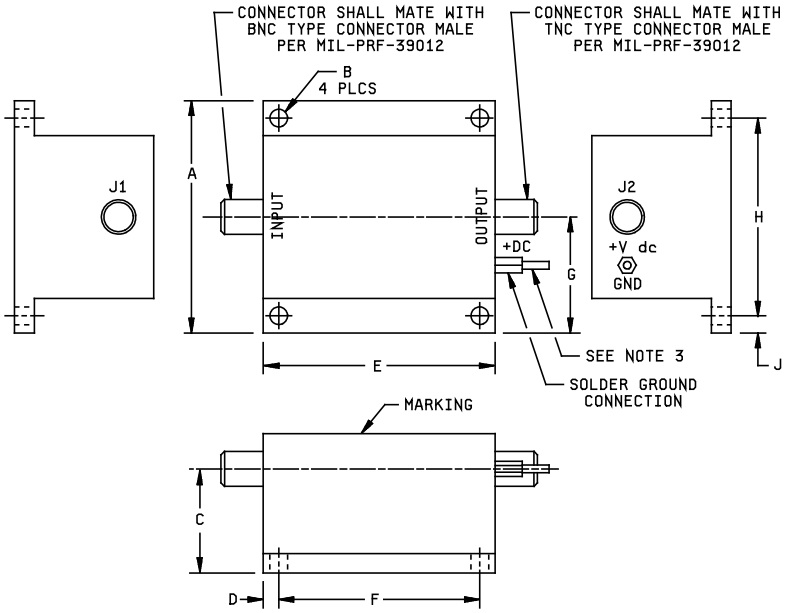

NOTES:
1. Dimensions are in inches.
2. Metric equivalents are given for general information only (1.00 inch = 25.4 mm).
3. Barrel diameter shall accept two turns of AWG NO. 24 wire.

	Inches		Millimeters	
	Max	Min	Max	Min
A	1.885	1.865	47.88	47.37
B	.202 dia	.082 dia	5.13 dia	2.08 dia
C	.850	.830	21.59	21.08
D	.135	.115	3.43	2.92
E	1.880	1.870	47.75	47.50
F	1.630	1.620	41.40	41.15
G	.947	.927	24.05	23.55
H	1.635	1.615	41.53	41.02
J	.135	.115	3.43	2.92

FIGURE 1. Dimensions and configuration, dash number -01.

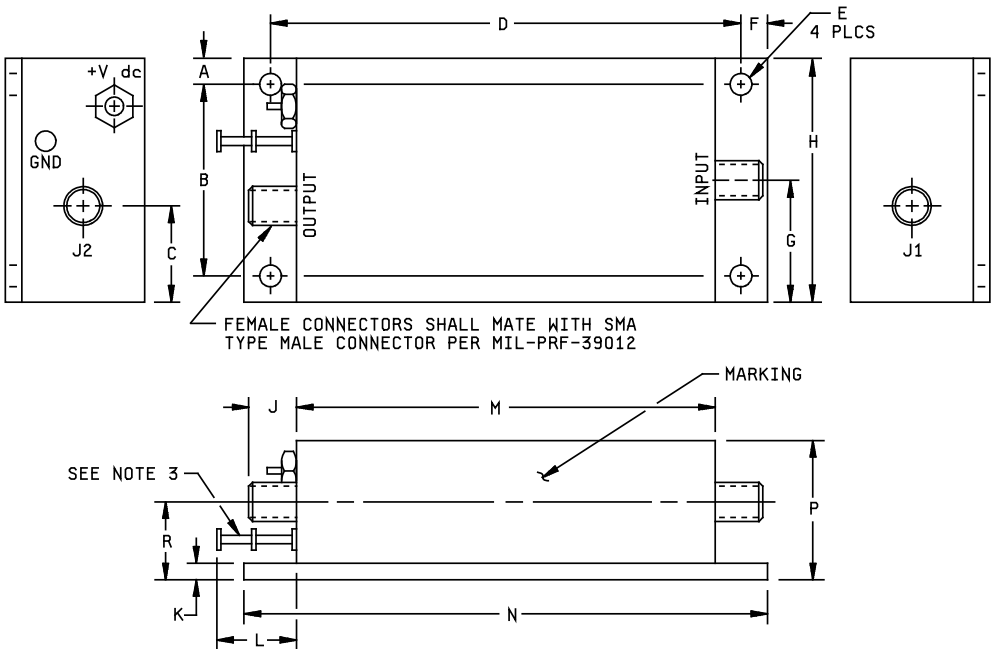

	Inches		Millimeters	
	Max	Min	Max	Min
A	.27	.23	6.9	5.8
B	1.385 typ	1.365 typ	35.18 typ	34.67 typ
C	.71	.67	18.0	17.0
D	3.385	3.365	85.98	85.47
E	.166 dia	.146 dia	4.22 dia	3.71 dia
F	.21	.17	5.3	4.3
G	.90	.86	22.9	21.8
H	1.77	1.73	45.0	43.9
J	.42 typ	.38 typ	10.7 typ	9.7 typ
K	.14	.10	3.6	2.5
L	.59	.55	15.0	14.0
M	3.02	2.98	76.7	75.7
N	3.77	3.73	95.8	94.7
P	1.02	.98	25.9	24.9

NOTE:
1. Dimensions are in inches.
2. Metric equivalents are given for general information only (1.00 inch = 25.4 mm).
3. Barrel diameter shall accept two turns of AWG NO. 24 wire.

FIGURE 2. Dimensions and configuration, dash number -02.

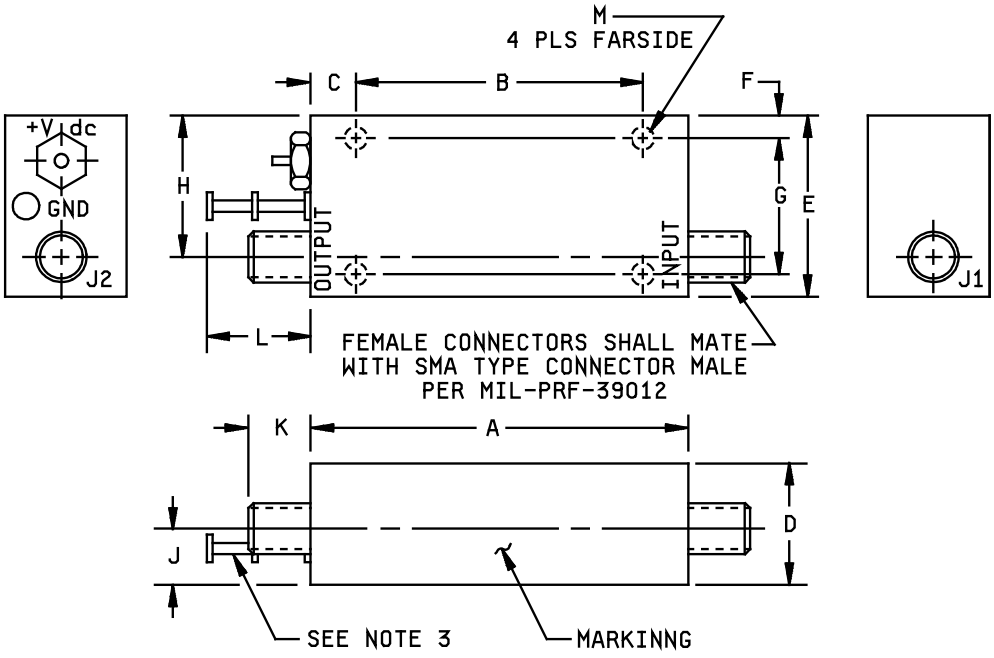

	Inches		Millimeters	
	Max	Min	Max	Min
K	.40 typ	-	10.2 typ	-
L	.57 typ	-	14.5 typ	-

NOTES:
1. Dimensions are in inches (see Table II).
2. Metric equivalents are given for general information only (1.00 inch = 25.4 mm).
3. Barrel diameter shall accept two turns of AWG NO. 24 wire.

FIGURE 3. Dimensions and configuration, dash numbers -03, -04, -07, -08, -10, -11, and -12.

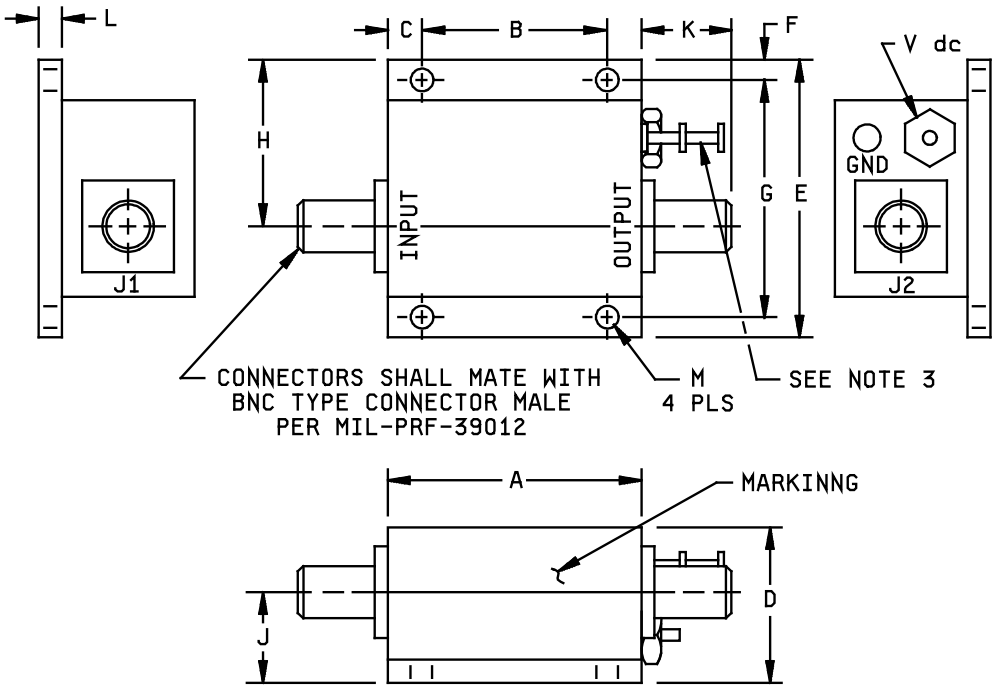

	Inches		Millimeters	
	Max	Min	Max	Min
K	.75	-	19.1	-
L	.135	.115	3.43	2.92

NOTES:
1. Dimensions are in inches (see Table II).
2. Metric equivalents are given for general information only (1.00 inch = 25.4 mm).
3. Barrel diameter shall accept two turns of AWG No. 24 wire.

FIGURE 4. Dimensions and configuration, dash numbers -05 and -09.

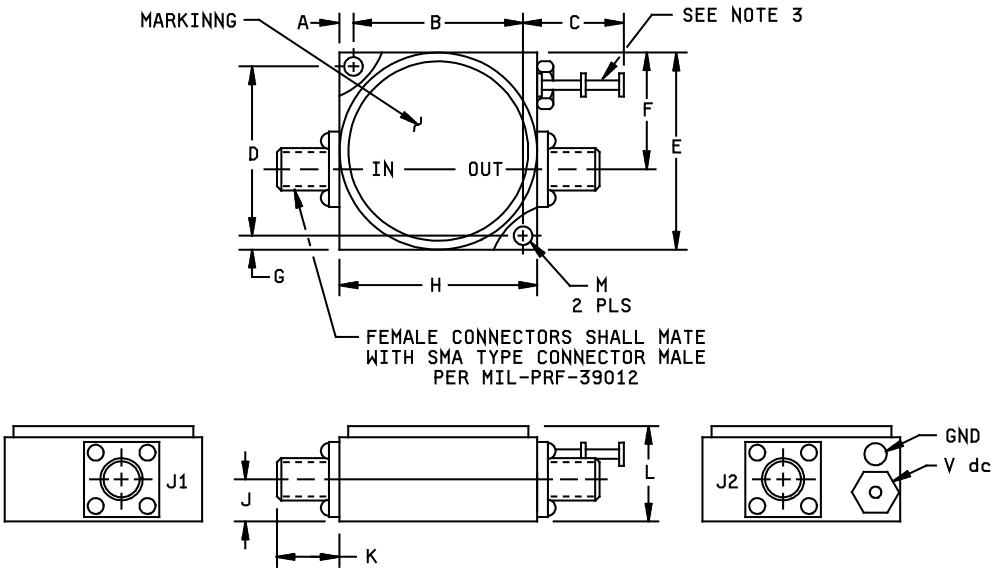

	Inches		Millimeters	
	Max	Min	Max	Min
A	.10	.08	2.5	2.0
B	1.126	1.106	28.60	28.09
C	.57	-	14.5	-
D	1.126	1.106	28.60	28.09
E	1.32	1.28	33.5	32.5
F	.78	.76	19.8	19.3
G	.10	.08	2.5	2.0
H	1.32	1.28	33.5	32.5
J	.29	.27	7.4	6.9
K	.40 typ	-	10.2 typ	-
L	.63 typ	-	16.0 typ	-
M	.127 dia	.123 dia	3.23 dia	3.12 dia

NOTES:
1. Dimensions are in inches.
2. Metric equivalents are given for general information only (1.00 inch = 25.4 mm).
3. Barrel diameter shall accept two turns of AWG No. 24 wire.

FIGURE 5. Dimensions and configuration, dash number -06.

TABLE I. Electrical characteristics (25°C unless otherwise specified).

Dash No.	Frequency range	DC input power		Gain (dB)	Gain flatness (dB)	RF output power (dBm)	VSWR Max		Noise figure (dB)	Intercept point (dBm)	Gain vs temp. (dB)	RF input power	Isolation (dB)	Phase linearity (deg)
		Voltage	Curr. Max (mA)	Min	Max	Min	IN	OUT	Max	Min		Max	Min	Max
S1 01 S2 N	5-250 MHz	+15 ±1%	15	25	±0.5	+5	2.0:1	2.0:1	1.5	+17	±0.5	N/A	N/A	N/A
S1 02 S2 N	100-200 MHz	+15 ±1%	30	27	±1.0	+5	2.0:1	2.0:1	2.5	+15	N/A	N/A	N/A	N/A
S1 03 S2 N	10-400 MHz	+15 ±1%	40	40	±1.5	+6.5	2.5:1	2.5:1	3.5	+19	N/A	N/A	N/A	N/A
S1 04 S2 N	10-500 MHz	+15 ±1%	130	38	±1.5	+19	2.5:1	2.5:1	4	+34	N/A	N/A	N/A	N/A
S1 05 S2 N	5-1000 MHz	+15 ±1%	15	14	±1.0	-2	2.0:1	2.0:1	5	N/A	N/A	N/A	N/A	N/A
S1 06 S2 N	100-2000 MHz	+15 ±1%	23	9	±1.0	+5	2.0:1	2.0:1	6.5	+15	N/A	N/A	N/A	N/A
S1 07 S2 N	500-2000 MHz	+12 ±1%	200	36	±1.0	+15	2.0:1	2.0:1	3.5	+25	N/A	N/A	N/A	N/A
S1 08 S2 N	500-2000 MHz	+12 ±1%	160	27	±1.0	+15	2.0:1	2.0:1	3.5	+25	N/A	N/A	N/A	N/A
S1 09 S2 N	500-2000 MHz	+15 ±1%	110	25	±1.0	+12	2.0:1	2.0:1	4.0	+23	N/A	N/A	N/A	N/A

TABLE I. Electrical characteristics (25°C unless otherwise specified) - Continued.

Dash No.	Frequency range	DC input power		Gain (dB)	Gain flatness (dB)	RF output power (dBm)	VSWR Max		Noise figure (dB)	Intercept point (dBm)	Gain vs temp. (dB)	RF input power	Isolation (dB)	Phase linearity (deg)
		Voltage	Curr. Max (mA)	Min	Max	Min	IN	OUT	Max	Min		Max	Min	Max
S1 10 S2 N	8-12 GHz	+12 ±1%	250	37	±2.0	+13	2.0:1	2.0:1	5.5	+23	N/A	N/A	N/A	N/A
S1 11 S2 N	8-12 GHz	+12 ±1%	150	22	±1.5	+13	2.0:1	2.0:1	5.5	+23	N/A	N/A	N/A	N/A
S1 12 S2 N	12-18 GHz	+12 ±1%	375	33	±2.0	+10	2.0:1	2.0:1	7.0	+20	N/A	N/A	N/A	N/A

TABLE II. Dimensions, physical and environmental characteristics.

Dash No.	Dimensions (in)										Weight (lb) Max	Temperature range		Seal	Salt	EMI	RF connectors		Fig No.
	A	B	C	D	E	F	G	H	J	M		Operating case temp	Nonoper-ating				Input	Output	
S1 01 S2 N	N/A	N/A	N/A	N/A	N/A	N/A	N/A	N/A	N/A	N/A	.44	-54/+71°C	-54/+85°C	Non-hermetic	N/A	CE03 MIL-STD-461	Female	Female	1
S1 02 S2 N	N/A	N/A	N/A	N/A	N/A	N/A	N/A	N/A	N/A	N/A	.44	-54/+71°C	-54/+85°C	Non-hermetic	N/A	CE03 MIL-STD-461	Female	Female	2
S1 03 S2 N	1.33 ±.02	.750 ±.01	.29 ±.01	.700 ±.02	1.03 ±.02	.11 ±.01	.810 ±.01	.555 ±.02	.352 ±.02	2-56 UNC-2B x .15 Dp	.28	-54/+85°C	-54/+100°C	Non-hermetic	Appli-cable	CE03 MIL-STD-461	Female	Female	3
S1 04 S2 N	2.35 ±.02	1.774 ±.01	.29 ±.01	.700 ±.02	1.03 ±.02	.11 ±.01	.810 ±.01	.555 ±.02	.352 ±.02	2-56 UNC-2B x .15 Dp	.28	-54/+85°C	-54/+100°C	Non-hermetic	Appli-cable	CE03 MIL-STD-461	Female	Female	3
S1 05 S2 N	1.37 ±.02	1.000 ±.01	.19 ±.01	.84 ±.02	1.50 ±.02	.11 ±.01	1.281 ±.01	.90 ±.02	.49 ±.02	.125 dia	.24	-45/+81°C	-57/+81°C	Non-hermetic	N/A	CE03 MIL-STD-461	Female	Female	4
S1 06 S2 N	N/A	N/A	N/A	N/A	N/A	N/A	N/A	N/A	N/A	N/A	.22	-54/+85°C	-54/+100°C	Hermetic	Appli-cable	CE03 MIL-STD-461	Female	Female	5
S1 07 S2 N	2.08 ±.02	1.58 ±.01	.25 ±.01	.67 ±.02	2.15 ±.02	.20 ±.01	.75 ±.01	.78 ±.02	.31 ±.02	4-40 UNC-2B x .25 Dp	.17	-54/+85°C	-54/+100°C	Hermetic	N/A	CE03 MIL-STD-461	Female	Female	3
S1 08 S2 N	2.08 ±.02	1.58 ±.01	.25 ±.01	.67 ±.02	1.15 ±.02	.20 ±.01	.75 ±.01	.78 ±.02	.31 ±.02	4-40 UNC-2B x .25 Dp	.17	-54/+85°C	-54/+100°C	Hermetic	N/A	CE03 MIL-STD-461	Female	Female	3

TABLE II. Dimensions, physical and environmental characteristics. Continued

Dash No.	Dimensions (in)										Weight (lb) Max	Temperature range		Seal	Salt	EMI	RF connectors		Fig. No.
	A	B	C	D	E	F	G	H	J	M		Operating case temp	Non-operating				Input	Output	
S109S2N	2.85 ±.02	2.450 ±.01	.20 ±.01	.85 ±.02	1.95 ±.02	.11 ±.01	1.732 ±.01	1.12 ±.02	.49 ±.02	N/A	.77	-54/+85°C	-54/+100°C	Hermetic	N/A	CE03 MIL-STD-461	Female	Female	4
S110S2N	2.25 ±.02	1.750 ±.01	.25 ±.01	.67 ±.02	1.15 ±.02	.20 ±.01	.75 ±.01	.64 ±.02	.31 ±.02	4-40 UNC-2Bx .25 Dp	.22	-54/+71°C	-54/+85°C	Hermetic	N/A	CE03 MIL-STD-461	Female	Female	3
S111S2N	1.75 ±.02	1.250 ±.01	.25 ±.01	.67 ±.02	1.15 ±.02	.20 ±.01	.75 ±.01	.64 ±.02	.31 ±.02	4-40 UNC-2Bx .25 Dp	.15	-54/+71°C	-54/+85°C	Hermetic	N/A	CE03 MIL-STD-461	Female	Female	3
S112S2N	4.42 ±.02	4.25 ±.01	.09 ±.01	.54 ±.02	1.26 ±.02	.09 ±.01	1.09 ±.01	.65 ±.02	.23 ±.02	2-56 UNC-2Bx .25 Dp	.44	-54/+71°C	-54/+85°C	Hermetic	N/A	CE03 MIL-STD-461	Female	Female	3

REQUIREMENTS:

Dimensions and configuration: See figures and table II.

Electrical characteristics: See table I.

Physical and environmental characteristics: See table II.

Part or identifying number (PIN): M28875/6-(dash numbers from tables I and II)

Referenced documents. In addition to MIL-DTL-28875, this specification sheet references the following documents:
MIL-PRF-39012
MIL-STD-461

The margins of this specification sheet are marked with vertical lines to indicate where modifications from this revision were made. This was done as a convenience only and the Government assumes no liability whatsoever for any inaccuracies in these notations. Bidders and contractors are cautioned to evaluate the requirements of this document based on the entire content irrespective of the marginal notations.

Custodians:
Army - CR
Navy - EC
Air Force - 85
DLA - CC

Review activities:
Army - MI
Navy - MC, OS, SH
Air Force - 19, 99

Preparing activity:
DLA - CC

(Project number 5996-2015-003)

NOTE: The activities listed above were interested in this document as of the date of this document. Since organizations and responsibilities can change, you should verify the currency of the information above using the ASSIST Online database at https://assist.dla.mil/.