INCH-POUND

MIL-DTL-28837D
30 July 2015
SUPERSEDING
MIL-DTL-28837C
5 June 2012

DETAIL SPECIFICATION

MIXER STAGES, RADIO FREQUENCY
GENERAL SPECIFICATION FOR

This specification is approved for use by all Departments
and Agencies of the Department of Defense.

1. SCOPE

1.1 Scope. This specification covers the general requirements for mixer stages, radio frequency for use in military systems (see 6.1).

1.2 Part or Identifying Number (PIN). The military PIN must consist of the letter "M" followed by the basic number of the specification sheet, an assigned dash number (see 3.1), and the letter N or S; where N indicates a nonscreened item and S indicates a screened item (see 3.5, 3.6, and table III.) Mixers intended for space environment shall be marked with “T”.

M28837/1	-	01	N	or	S	or	T
Military designator and specification sheet number		Dash number designated on specification sheet	Nonscreened		Screened		Space flight mixers

2. APPLICABLE DOCUMENTS

2.1 General. The documents listed in this section are specified in sections 3 and 4 of this specification. This section does not include documents cited in other sections of this specification or recommended for additional information or as examples. While every effort has been made to ensure the completeness of this list, document users are cautioned that they must meet all specified requirements of documents cited in sections 3 and 4 of this specification, whether or not they are listed.

2.2 Government documents.

2.2.1 Specifications, standards, and handbooks. The following specifications, standards, and handbooks form a part of this document to the extent specified herein. Unless otherwise specified, the issues of these documents are those cited in the solicitation or contract.

FEDERAL STANDARDS

FED-STD-H28 - Screw-Thread Standards for Federal Services.

Comments, suggestions or questions on this document should be addressed to DLA Land and Maritime, ATTN: VAT, Post Office Box 3990, Columbus, OH 43218-3990, or emailed to TubesAmps@dla.mil Since contact information can change, you may want to verify the currency of this address information using the ASSIST Online database at https://assist.dla.mil.

AMSC N/A FSC 5895

DEPARTMENT OF DEFENSE SPECIFICATION

MIL-DTL-85	-	Waveguides, Rigid, Rectangular, General Specification for.
MIL-DTL-3922	-	Flanges, Waveguide, General Purpose, General Specification for.
MIL-DTL-5541	-	Chemical Conversion Coatings on Aluminum and Aluminum Alloys.
MIL-DTL-14072	-	Finishes for Ground Based Electronic Equipment.
MIL-DTL-45204	-	Gold Plating, Electrodeposited.
MIL-P-24691/3	-	Pipe and Tube, Corrosion-Resistant, Stainless Steel, Seamless or Welded.
MIL-PRF-39012	-	Connectors, Coaxial, Radio Frequency, General Specification for.
MIL-DTL-55302	-	Connectors, Printed Circuit Subassembly and Accessories.

DEPARTMENT OF DEFENSE STANDARDS

MIL-STD-129	-	Military Marking for Shipment and Storage.
MIL-STD-202	-	Test Methods for Electronic and Electrical Component Parts.
MIL-STD-889	-	Dissimilar Metals.
MIL-STD-1276	-	Leads for Electronic Component Parts.
-		Marking of Electrical and Electronic Parts.

(Copies of these documents are available online at https://assist.dla.mil/ or https://assist.dla.mil/quicksearch.)

2.3 Non-Government publications. The following documents form a part of this document to the extent specified herein. Unless otherwise specified, the issues of these documents are those cited in the solicitation or contract.

NATIONAL CONFERENCE OF STANDARDS LABORATORIES (NCSL)

NCSL- Z540.3	-	Requirements for the Calibration of Measuring and Test Equipment.

(Copies are available online at http://www.ncsli.org)

AMERICAN SOCIETY FOR TESTING AND MATERIALS (ASTM) INTERNATIONAL

ASTM-A240/A240M	-	Chromium and Chromium-Nickel Stainless Steel Plate, Sheet, and Strip for Pressure Vessels and for General Applications
ASTM-A484/A484M	-	Steel, Bars, Billets and Forgings, Stainless.
ASTM-A582/A582M	-	Bars, Free-Machining Stainless Steel.
ASTM-A666	-	Steel, Sheet, Strip, Plate, and Flat Bar, Austenitic Stainless, Annealed or Cold-Worked.
ASTM-A693	-	Precipitation-Hardening Stainless and Heat-Resisting Steel Plate, Sheet, and Strip.
ASTM-B16/B16M	-	Rod, Brass, Free-Cutting, Bar and Shapes for use in Screw Machines.
ASTM-B26/B26M	-	Aluminum-Alloy Sand Castings.
ASTM-B36/B36M	-	Plate, Brass, Sheet, Strip, and Rolled Bar.
ASTM-B85/B85M	-	Aluminum-Alloy Die Castings.
ASTM-B108/B108M	-	Aluminum-Alloy Permanent Mold Castings, Standard Specification for.
ASTM-B121/B121M	-	Plate, Leaded Brass, Sheet, Strip, and Rolled Bar.
ASTM-B124/B124M	-	Copper and Copper Alloy Forging Rod, Bar, and Shapes.
ASTM-B194	-	Copper-Beryllium Alloy Plate, Sheet, Strip, and Rolled Bar.
ASTM B196/B196M	-	Rod and Bar, Copper-Beryllium Alloy
ASTM-B209	-	Aluminum and Aluminum-Alloy, Sheet and Plate.
ASTM-B221	-	Aluminum and Aluminum Alloy Extruded Bars, Rods, Wire, Profiles, and Tubes.
ASTM-B241/B241M	-	Aluminum and Aluminum-Alloy Seamless Pipe and Seamless Extruded Tube.
ASTM-B308/B308M	-	Aluminum-Alloy 6061-T6 Standard Structural Shapes.
ASTM-B488	-	Gold for Engineering Uses, Electrodeposited Coatings of.
ASTM-B545	-	Tin, Electrodeposited Coatings of.
ASTM-B700	-	Electrodeposited Coatings of Silver for Engineering Use.

ASTM D1710	-	Tubing, Extruded And Compression Molded Polytetrafluoroethylene (PTFE) Rod And Heavy Walled.
ASTM D4894	-	Polytetrafluoroethylene (PTFE) Granular Molding and Ram Extrusion Materials, Standard Specification for.
ASTM D4895	-	Standard Specification for Polytetrafluoroethylene (PTFE) Resin Produced From Dispersion.
ASTM-D5948	-	Compounds, Molding, Thermosetting.

(Copies of these documents are available from r www.astm.org.)

SOCIETY OF AUTOMOTIVE ENGINEERS (SAE) INTERNATIONAL

SAE-AMS2404	-	Plating, Electroless Nickel
SAE-AMS2422	-	Plating, Gold.
SAE-AMS4290	-	Aluminum Alloy, Die Castings 9.5SI-0.5MG (360.0-F).
SAE-AMS4291	-	Aluminum Alloy, Die Castings 8.5SI-3.5cu (A380.0-F) (See As 1990) As Cast.
SAE-AMS5511	-	Steel, Corrosion-Resistant, Sheet, Strip, and Plate 19 Cr - 9.5 Ni (304L) Solution Heat Treated.
SAE-AMS-I-23011	-	Iron Nickel Alloys for Sealing to Glasses and Ceramics.
SAE-AMS-QQ-A-250	-	Aluminum and Aluminum-Alloy, Plate and Sheet.
SAE-AMS-QQ-N-290	-	Nickel Plating (Electrodeposited).
SAE-AMS-QQ-S-763	-	Steel Bars, Wire, Shapes, and Forgings; Corrosion Resistant.
SAE-J452	-	Chemical Compositions, Mechanized and Physical Properties of SAE, Aluminum Casting Alloys, General Information.

(Copies of these documents are available from SAE International, www.sae.org.)

2.4 Order of precedence. Unless otherwise noted herein or in the contract, in the event of a conflict between the text of this document and the references cited herein (except for related specification sheets), the text of this document takes precedence. Nothing in this document, however, supersedes applicable laws and regulations unless a specific exemption has been obtained.

3. REQUIREMENTS

3.1 Specification sheets. The individual mixer requirements shall be as specified herein and in accordance with the applicable specification sheets. In the event of any conflict between requirements of this specification and the specification sheet, the latter shall govern.

3.2 First article. Mixers covered by specification sheets furnished under this specification shall be products which have been tested and have passed the first article inspection specified in 4.5 (see 6.3).

3.3 Material. The material shall be as specified. When a definite material is not specified, a material shall be used which will enable the mixers to meet the performance requirements of this specification. Acceptance or approval of any constituent material shall not be construed as a guaranty of the acceptance of the finished product. Unless otherwise specified (see 3.1), the material shall be selected from the following materials.

a. Aluminum alloy plates and sheet shall conform to the composition 6061 of ASTM-B209 and SAE-AMS-QQ-A-250; extruded aluminum alloy shall conform to composition 6063 of ASTM-B241/B241M, or composition 6061 of ASTM-B221. Aluminum bar shall conform to 6061 per ASTM-B221 and ASTM-B241/241M.

b. Corrosion-resisting steel plates, sheets, and stays shall conform to ASTM-A240/A240M, ASTM-A-666, and ASTM-A693 and SAE-AMS5511. Corrosion-resisting forging shall conform to SAE-AMS-QQ-S-763, and corrosion-resisting steel pipe shall conform to MIL-P-24691/3. Corrosion resisting steel bar shall conform to ASTM-A582/A582M and ASTM A484/A484M.

c. Copper alloy sheet shall conform to ASTM-B36/B36M and ASTM-B121/B121M.

d. Aluminum alloy shall conform to alloy A360 of ASTM-B85/B85M, ASTM-B26/B26M, ASTM-B108/B108M, SAE-J452, SAE-AMS4290, and SAE-AMS4291, alloy 356-T6 of ASTM-B108/B108M or alloy D712.0-F of ASTM-B26/B26M.

e. Brass shall conform to alloy 360 of ASTM-B121/B121M, ASTM-B36/B36M, ASTM-B16/B16M, and ASTM-B124/B124M.

f. Beryllium copper shall conform to ASTM-B194 or ASTM B196/B196M.

g. Pure tin shall be prohibited internally and externally.

3.3.1 Dissimilar metal. Unless suitably protected against electrolytic corrosion, dissimilar metal as defined in MIL-STD-889 shall not be in intimate contact.

3.3.2 Plastic. Plastic shall conform to ASTM-D5948, ASTM D4894, ASTM D4895 and ASTM D1710.

3.3.3 Fungus. Material used in the construction of mixers shall be fungus inert.

3.3.4 Headers. Headers shall conform to best manufacturing practices.

3.4 Design and construction. Mixers shall be of design, construction, and physical dimensions specified (see 3.1).

3.4.1 Frequency response range. The frequency response range shall be as specified (see 3.1).

3.4.2 Nominal impedance. Unless otherwise specified (see 3.1), the nominal impedance looking into the local oscillator and RF ports of Transverse-Electro-Magnetic (TEM) mixers shall be 50 ohms.

3.4.3 Input level. The input level for mixers shall be as specified (see 3.1).

3.4.4 Threaded parts. All screw threads used in construction of mixers shall be in accordance with FED-STD-H28.

3.4.5 Mounting. Mixers shall be mounted in any position.

3.4.6 RF connections.

3.4.6.1 Coaxial connectors. Coaxial connectors for a specific mixer shall conform to MIL-PRF-39012 as applicable (see 3.1).

3.4.6.2 Waveguide flanges. Unless otherwise specified (see 3.1), all flanges used on mixers shall mate electrically and mechanically with flanges covered by MIL-DTL-3922 or (see 6.7).

3.4.6.3 Printed circuit connectors. Printed circuit connections for a specific mixer shall conform to MIL-DTL-55302 as applicable (see 3.1).

3.4.6.4 Leads. Lead connections for a specific mixer shall be a chemical composition conforming to MIL-STD-1276 or SAE-AMS-I-23011 and unless otherwise specified (see 3.1), shall be solderable.

3.4.6.5 Receptacles. Receptacle connections for a specific mixer shall be as specified (see 3.1).

3.4.6.6 Connection caps. All waveguide and coaxial connections shall be sealed with push-on plastic caps to prevent both damage and the entrance of moisture and foreign material during storage.

3.4.7 Waveguide. Waveguides used in the manufacturing of the mixers shall conform to MIL-DTL-85 or (see 6.8), as applicable (see 3.1).

3.4.8 Finish. Unless otherwise specified (see 3.1), the finish shall be as specified in 3.4.8.1 through 3.4.8.4.

3.4.8.1 RF mating surfaces. Mating surfaces shall be finished in gold, nickel or silver conforming to MIL-DTL-45204, SAE-AMS2422, ASTM-B488, SAE-AMS-QQ-N-290, ASTM-B700 and SAE-AMS2404. Nickel shall be used only if no other surface finish can meet the performance requirements.

3.4.8.2 External surfaces. All external surfaces excepting RF mating surfaces shall be finished in accordance with MIL-DTL-14072.

3.4.8.3 Aluminum alloys. Aluminum alloy surfaces shall be chemically treated in accordance with MIL-DTL-5541; however, electrical mating surfaces shall be conductive.

3.4.8.4 Pure tin. The use of pure tin, as an underplate or final finish, is prohibited both internally and externally. Tin content of mixer stages and solder shall not exceed 97 percent, by mass. Tin shall be alloyed with a minimum of 3 percent lead, by mass (see 6.8). Lead-free silver-tin (Sn96Ag04) or antimony-tin (Sn95Sb05), high temperature solders may be used where high temperature solder is necessary with approval of the acquiring activity. The tin content of lead-free high temperature solders shall not exceed 97 percent by mass.

3.4.9 Weight. The weight shall be as specified (see 3.1).

3.4.10 Temperature range. The temperature range shall be as specified (see 3.1).

3.4.11 Life. Unless otherwise specified (see 3.1), the manufacturer shall submit to acquiring activity evidence that mixers are designed to operate for 1 year and degradation for this period shall not exceed specified limits (see 3.1). This evidence on each mixer for which first article is requested shall be a certificate to the acquiring activity and a written guaranty shall be furnished to the acquiring activity on each awarded contract. Any acquired mixer that fails to meet this life requirement shall be replaced by the manufacturer at no cost to the Government.

3.5 Preconditioning (screened only). All screened mixers shall be preconditioned as specified in 4.7.2 and shall subsequently meet the electrical requirements specified (see 3.1).

3.6 Burn-in (screened only). All screened mixers shall be burned in as specified in 4.7.3, and shall subsequently meet the electrical requirements specified (see 3.1).

3.7 Electrical characteristics. When mixers are tested as specified in 4.7.4, the applicable electrical characteristics and tolerances shall be as specified (see 3.1).

3.8 Thermal shock. When mixers are tested as specified in 4.7.5, there shall be no physical damage. Upon completion of this test, mixers shall meet the conversion loss and isolation requirements.

3.9 Vibration. When mixers are tested as specified in 4.7.6, there shall be no evidence of damage and no vibration induced amplitude modulation beyond the limits specified (see 3.1).

3.10 Shock. When mixers are tested as specified in 4.7.7, there shall be no evidence of damage. Upon completion of this test, mixers shall meet the conversion loss and isolation requirements.

3.11 Seal. After mixers are tested as specified in 4.7.8, they shall meet electrical requirements specified (see 3.1).

3.12 Barometric pressure (when specified, see 3.1). When mixers are tested as specified in 4.7.9, there shall be no evidence of damage. During the test, electrical characteristics, as applicable, shall be as specified (see 3.1).

3.13 Solderability (as applicable). When mixers with solderable connections are tested as specified in 4.7.10, the terminals shall meet the criteria specified herein.

3.14 Resistance to solvents. When mixers are tested as specified in 4.7.11, there shall be no evidence of illegible marking, mechanical damage, or deterioration of material or finishes.

3.15 Resistance to soldering heat (as applicable). When mixers with solderable terminals are tested as specified in 4.7.12, there shall be no damage to the mixers or to the terminal insulators that will cause electrical failure, or hermetically sealed mixers to leak. Chipping of terminal insulators above shall not be cause for failure unless the chipping extends to the outer periphery. After the test, mixers shall meet the conversion loss and seal requirements.

3.16 Temperature extreme. When mixers are tested as specified in 4.7.13, there shall be no evidence of damage. During this test, the mixers shall meet the conversion loss and isolation requirements.

3.17 Terminal strength. When mixers are tested as specified in 4.7.14, the terminal strength shall be no less than the value specified.

3.18 Moisture resistance. When mixers are tested as specified in 4.7.15, there shall be no evidence of damage. Upon completion of this test, mixers shall meet the conversion loss and isolation requirements.

3.19 Salt atmosphere (when specified) (see 3.1). When mixers are tested as specified in 4.7.16, there shall be no evidence of warping, cracking, peeling, excessive corrosion, or in case of plated metals, corrosion that has passed through the plating and exposed the base metal. Upon completion of this test, mixers shall meet the conversion loss and isolation requirements.

3.20 Radiographic inspection (space flight mixers screening only). Components intended for space environment application shall be subjected to and pass radiographic inspection (100% screening) in accordance with 4.7.17.

3.21 Acceleration (space flight mixers screening only). Components intended for space environment application shall be subjected to and pass acceleration requirement (100% screening) in accordance with 4.7.18.

3.22 Marking. Mixers shall be marked in accordance with MIL-STD-1285 with the PIN and the manufacturer's source code. Marking characters shall be approximately .125 inch (3.18 mm) in height. The marking shall be placed on the identification plate, using a method that will provide legible and permanent marking for the life of the mixer. The manufacturer's name or trademark may also be included in the marking provided such is not expressly forbidden in the contract. When space does not permit use of an identification plate, marking may be directly on a flat or circular cylindrical surface of the body. Letter size may be reduced to accommodate the following:

Preferred	M28837/ 1-01S	PIN
	ZZZZZ	Manufacturer's source code
Permissible	M 28837/ 1-01S	PIN
	ZZZZZ	Manufacturer's source code

3.22.1 Additional marking. In addition to any other special marking required by the contract (see 6.2), each unit package, intermediate and exterior container, and unitized load must be marked in accordance with MIL-STD-129. All unit packages fabricated with barrier material conforming to MIL-PRF-81705 type I must be marked with the term "ES/EM shielded" in accordance with the special marking requirements of MIL-STD-129.

3.22.2 Serialization. When the contract requires that mixers be serialized, each mixer shall be marked with a unique serial number assigned consecutively within the inspection lot, allowing traceability of the mixer. Space flight mixers shall contain lot traceability on all parts from the time the lot is assembled to the time it is accepted.

3.23 Recycled, recovered, environmentally preferable, or biobased materials. Recycled, recovered, environmentally preferable, or biobased materials should be used to the maximum extent possible, provided that the material meets or exceeds the operational and maintenance requirements, and promotes economically advantageous life cycle costs.

3.24 Workmanship. Mixers shall be manufactured and processed in such a manner as to be uniform in quality, and the shell of the mixer shall be free from tool marks, burrs, deep scratches, and other defects that will affect life, serviceability, or appearance.

4. VERIFICATION

4.1 Test equipment and inspection facilities. Test and measuring equipment and inspection facilities of sufficient accuracy, quality, and quantities to permit performance of the required inspection shall be established and maintained by the contractor. The establishment and maintenance of a calibration system to control the accuracy of the measuring and test equipment shall be in accordance with NCSL- Z540.3.

4.2 Classification of inspections. The inspections specified herein are classified as follows:

a. Materials inspection (see 4.3).

b. First article inspection (see 4.5).

c. Conformance inspection (see 4.6).

4.3 Materials inspection. Materials inspection shall consist of certification supported by verifying data that the materials listed in table I, used in fabricating the mixers, are in accordance with the applicable referenced specifications or requirements prior to such fabrication.

TABLE I. Materials inspection.

Material	Requirement paragraph	Applicable specification(s)
Aluminum	3.3	ASTM-B26/B26M, ASTM-B85/B85M, ASTM-B108/B108M, ASTM-B209, ASTM-B221, ASTM-B241/B241M, ASTM-B308/B308M, SAE-AMS4290, SAE-AMS4291, SAE-AMS-QQ-A-250, SAE-J452
Nickel-Iron Alloy	3.3	SAE-AMS-I-23011
Brass	3.3	ASTM-B16/B16M, ASTM-B36/B36M, ASTM-B121/B121M, ASTM-B124/B124M
Copper	3.3	ASTM-B36/B36M, ASTM-B121/B121M, ASTM-B194, ASTM B196/B196M
Steel	3.3	ASTM-A582/A582M, ASTM A484/A484M ASTM-A240/240M, ASTM-A666, ASTM-A693, SAE-AMS5511, MIL-P-24691/3
Plastics	3.3.2	ASTM-D5948, ASTM D4894, ASTM D4895, ASTM D1710
Finish	3.4.8	MIL-DTL-45204, SAE-AMS2404, ASTM-B700, SAE-AMS2422, ASTM-B488, SAE-AMS-QQ-N-290

4.4 Inspection conditions. Unless otherwise specified herein, all inspections shall be performed in accordance with the test conditions specified in the "GENERAL REQUIREMENTS" of MIL-STD-202.

4.5 First article inspection. First article inspection shall consist of the tests specified in table II and shall be performed by the supplier, after award of contract and prior to production, at a location acceptable to the Government. First article inspection shall be performed on sample units which have been produced with equipment and procedures normally used in production. First article approval is valid only on the contract or purchase order under which it is granted, unless extended by the Government to other contracts or purchase orders.

4.5.1 Sample size. Four mixers of each PIN, for which first article is sought shall be subjected to first article inspection.

4.5.2 Inspection routine. The sample shall be subjected to the inspections specified in table II, in the order shown. All sample units shall be subjected to the inspection of group I. The sample shall then be divided into two subgroups and subjected to the inspection for their particular subgroup.

4.5.3 Failures. One or more failures shall be cause for refusal to grant first article approval.

4.5.4 Disposition of First article sample units. Sample units which have been subjected to first article testing shall not be delivered on any contract or purchase order. The Government reserves the right to retain the sample units or to require the supplier to furnish the sample units with the first article inspection report.

TABLE II. First article inspection.

Inspection	Requirement paragraph	Test method paragraph
Group I (4 sample units)		
Visual and mechanical	3.1, 3.3 through 3.4.8.4, 3.22 and 3.24	4.7.1
Preconditioning 1/	3.5	4.7.2
Burn-in 1/	3.6	4.7.3
Electrical characteristics 2/	3.7	4.7.4
Conversion loss	---	4.7.4.1
Noise figure	---	4.7.4.2
Isolation	---	4.7.4.3
Conversion compression	---	4.7.4.4
Conversion desensitization	---	4.7.4.5
Intermodulation	---	4.7.4.6
Insertion loss	---	4.7.4.7
VSWR	---	4.7.4.8
RF leakage	---	4.7.4.9
Group II Subgroup I (2 sample units)		
Thermal shock	3.8	4.7.5
Vibration	3.9	4.7.6
Shock	3.10	4.7.7
Seal	3.11	4.7.8
Barometric pressure 3/	3.12	4.7.9
Electrical characteristics 2/	3.7	4.7.4
Radiographic inspection 4/	3.20	4.7.17
Acceleration 4/	3.21	4.7.18
Group II Subgroup II (2 sample units)		
Solderability 2/	3.13	4.7.10
Resistance to solvent 2/	3.14	4.7.11
Resistance to soldering heat 2/	3.15	4.7.12
Temperature extreme	3.16	4.7.13
Terminal strength 2/	3.17	4.7.14
Moisture resistance	3.18	4.7.15
Salt atmosphere 3/	3.19	4.7.16
Electrical characteristics 2/	3.7	4.7.4

1/ Screened only.
2/ As applicable (see 3.1).
3/ When specified (see 3.1).
4/ Space flight mixers only.

4.6 Conformance inspection.

4.6.1 Inspection of product for delivery. Inspection of the product for delivery shall consist of group A inspection.

4.6.1.1 Inspection lot. An inspection lot shall consist of all mixers with the same PIN produced under essentially the same conditions, and offered for inspection at one time.

4.6.1.2 Group A inspection. Group A inspection shall consist of the examinations and tests specified in table III in the order shown. Subgroup 1 shall consist of screened and unscreened items. Subgroup 2 shall consist of only screened and space flight (when applicable) items.

TABLE III. Group A inspection.

Inspection	Requirement paragraph	Test method paragraph
Subgroup I (screened and unscreened samples)		
Visual and mechanical examination	3.1, 3.3 through 3.4.8.4, inclusive, 3.22 and 3.24	4.7.1
Seal	3.11	
Electrical characteristics 1/	3.7	4.7.8
Conversion loss	---	4.7.4
Noise figure	---	4.7.4.1
Isolation	---	4.7.4.2
Conversion compression	---	4.7.4.3
Conversion desensitization	---	4.7.4.4
Intermodulation	---	4.7.4.5
Insertion loss	---	4.7.4.6
VSWR	---	4.7.4.7
RF leakage	---	4.7.4.8
		4.7.4.9
Subgroup 2 (screened samples only)		
Thermal shock	3.8	4.7.5
Vibration	3.9	4.7.6.1
Seal	3.11	4.7.8
Electrical characteristics 1/	3.7	4.7.4
Radiographic inspection 2/	3.20	4.7.17
Acceleration 2/	3.21	4.7.18

1/ As applicable (see 3.1).
2/ Additional screening requirement for space flight mixers.

4.6.1.2.1 Sampling plan. Statistical sampling and inspection shall be performed on an inspection lot basis with a random sample of mixers selected in accordance with table IV. Acceptance levels shall be based upon the zero defective sampling plan. No failures shall be permitted.

TABLE IV. Group A sampling plan.

Lot size	Sample size	Space flight mixers
1 - 13	100 percent	100 percent
14 - 150	13	100 percent
151 - 280	20	100 percent
281 - 500	29	100 percent
501 - 1,200	34	100 percent
1,201 - 3,200	42	100 percent
3,201 - 10,000	50	100 percent
10,001 - 35,000	60	100 percent
35,001 - 150,000	74	100 percent
150,001 - 500,000	90	100 percent
500,001 and over	102	100 percent

4.6.1.2.2 Rejected lots. If an inspection lot is rejected, the contractor may rework it to correct the defects, or screen out the defective units, and resubmit for reinspection. Resubmitted lots shall be inspected with acceptance on zero failures. All rework shall be performed prior to re-inspection. Resubmitted lots shall be separate from new lots, and shall be clearly identified as reinspected lots.

4.7 Methods of examination and test.

4.7.1 Visual and mechanical examination. Mixers shall be examined to verify that the material, design, construction, physical dimensions, marking, and workmanship are in accordance with the applicable requirements (see 3.1, 3.3 to 3.4.8.4, inclusive, 3.22, and 3.24).

4.7.2 Preconditioning (screened only) (see 3.5). Unless otherwise specified, all screened mixers shall be preconditioned by subjecting them to the maximum operating temperature (see 3.1), for a 24 hour period. Subsequently each mixer shall meet the requirements of table III in the order shown.

4.7.3 Burn-in (screened only) (see 3.6). All screened mixers shall be tested by applying a 30 mA dc, unless otherwise specified (see 3.1) to the IF port for 48 hours in each polarity. Each mixer shall meet the requirements of table III in the order shown.

4.7.4 Electrical characteristics (see 3.7). The electrical characteristics shall be determined by the tests specified herein, as applicable (see 3.1). Electrical tests included herein do not embrace all of the electrical tests that may be requested. Unless otherwise specified (see 3.1), LO input level shall be +7 dBm. “Equivalent” test setups may be used provided they are industry accepted as equal to or better than the setups shown in figures 1 through 9.

4.7.4.1 Conversion loss (SSB). The conversion loss of mixers shall be measured at the low end and high end of the specified frequency range (see 3.1).

Procedure (see figure 1). The RF input level shall be -10 dBm and the LO input shall be as specified (see 3.1 and 4.7.4). When the -10 dBm input is such to cause a given mixer to operate in its nonlinear range, the RF input level shall be adjusted so the mixer shall operate in its linear range. The characteristic of the crystal filter number 1 shall be such that it will reject all responses other than the desired or specified intermediate frequency (IF). The characteristic of the filter number 2 shall be such that it will attenuate all harmonics of the RF source by at least 30 dB.

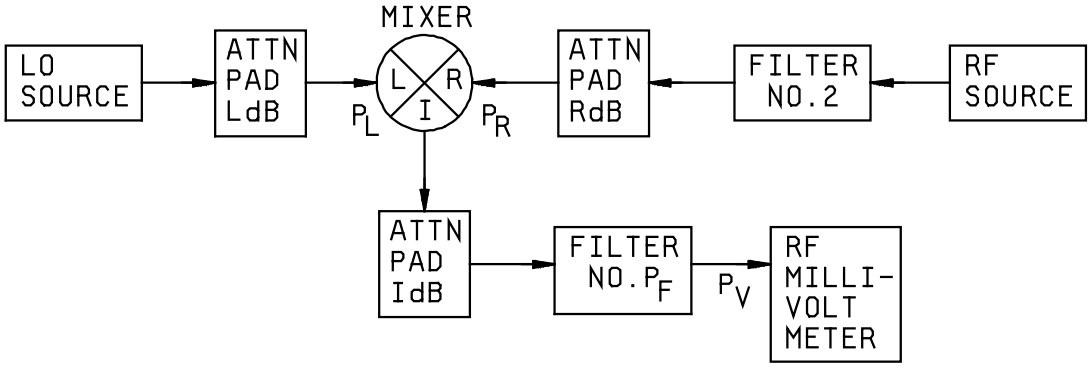

Conversion loss = $(P_R - I_{dB} - P_f - P_V)$ dB

FIGURE 1. Conversion loss test setup.

4.7.4.2 SSB noise figure. The SSB noise figure (NF) of mixers shall be measured as follows:

The NF shall be measured with thermal noise with specified LO frequency and available power. Unless otherwise specified, the IF shall be the difference between LO and (nominal) RF. Mixer port terminations shall be 1.2:1 VSWR or less at the L port for LO, at the R port for RF, and at the I port for each LO + RF and LO - RF. Measurement accuracy of NF shall be ± 0.4 dB.

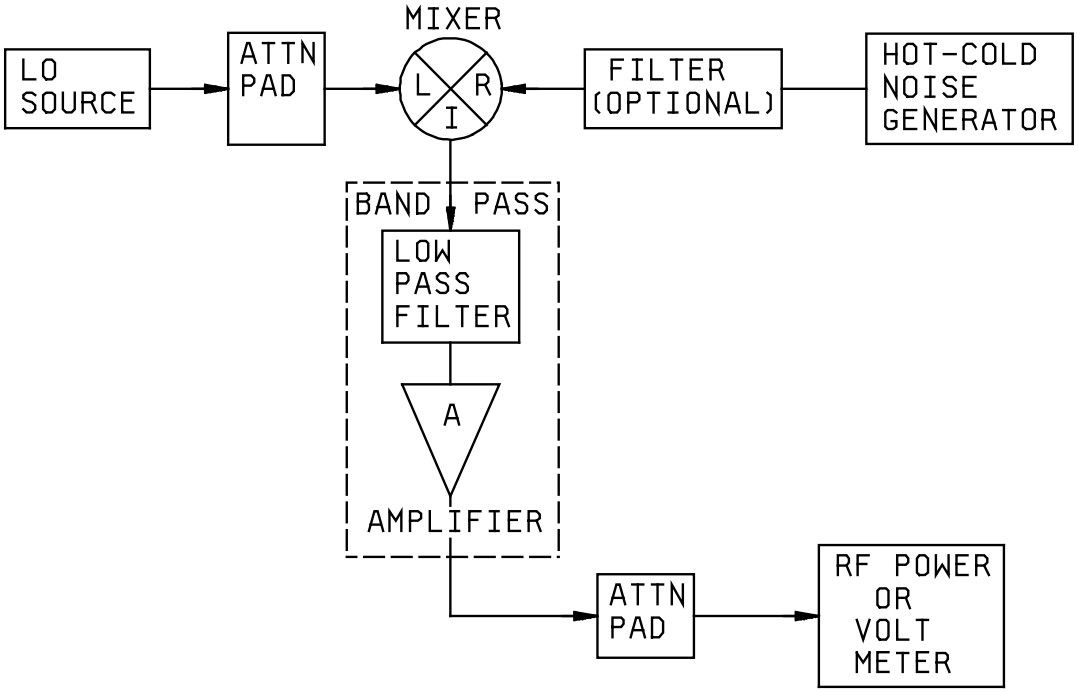

FIGURE 2. Noise figure test setup.

4.7.4.3 Isolation. The isolation between the LO to IF, LO to RF, and RF to IF ports shall be measured at the low end, center, and high end of the specified frequency (see 3.1) using the test setup in figures 3, 4, and 5. The input power shall be as specified (see 3.1). An acceptable alternate test method is the sweep frequency technique. The low pass filters shall attenuate all harmonics at least 30 dB and have negligible insertion loss over the specified frequency (see 3.1).

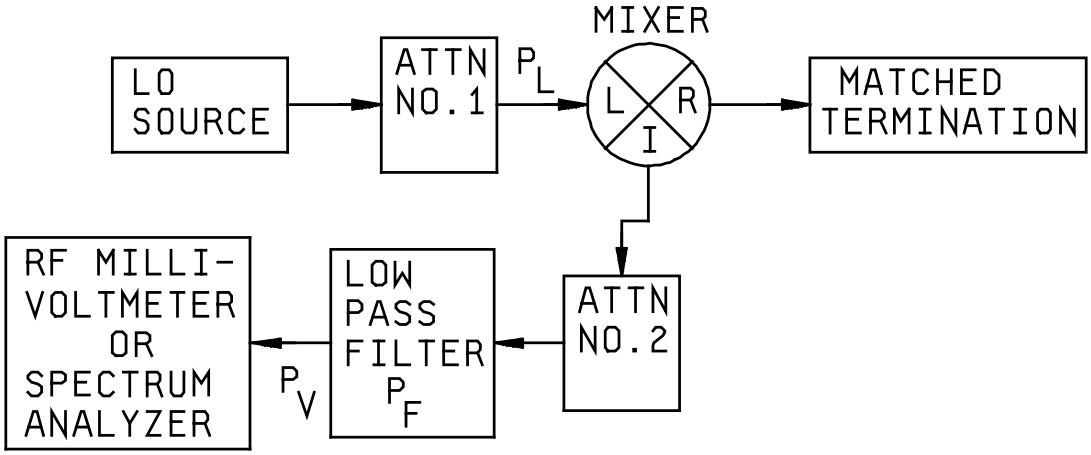

LO to IF isolation = (P_L - P_V - ATTN. #2 - PF) dB

FIGURE 3. LO to IF isolation test setup.

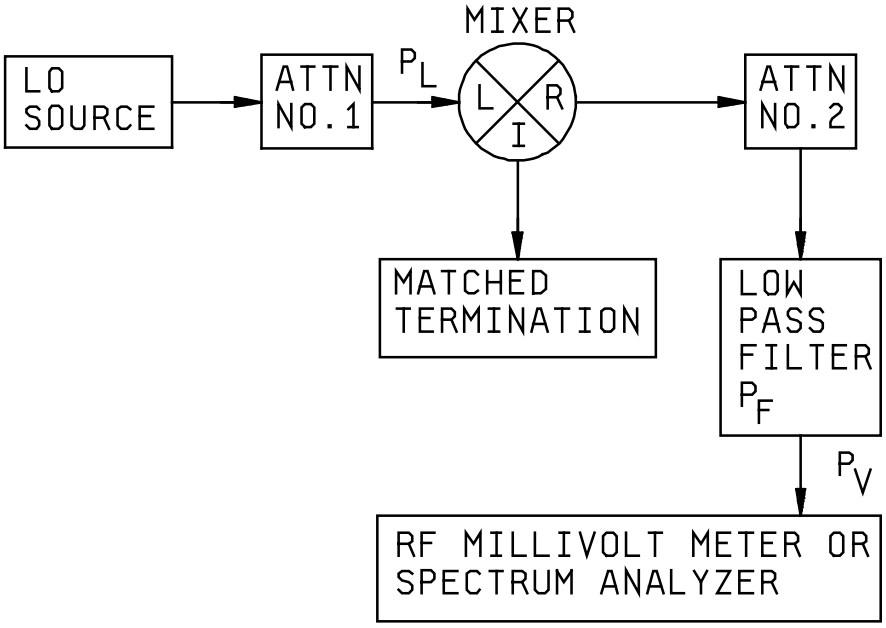

LO to RF isolation = (P_L - P_V - ATTN. #2 - PF) dB

FIGURE 4. LO to RF isolation test setup.

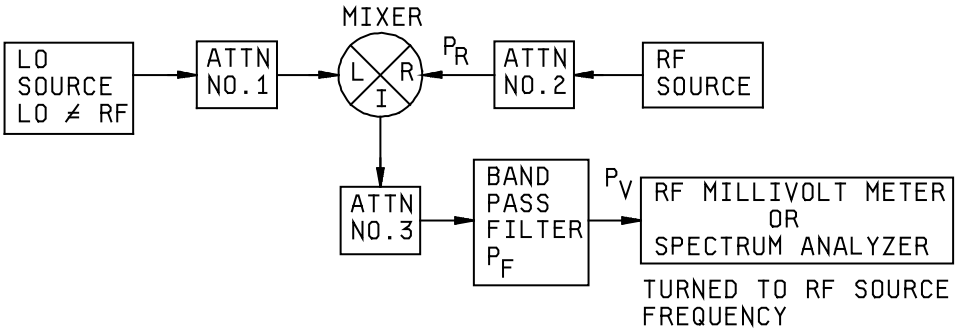

RF to IF isolation = (P_R - P_V - ATTN. #3 - PF) dB

FIGURE 5. RF to IF isolation test setup.

4.7.4.4 Conversion compression. The conversion compression shall be determined by measuring the RF power required to increase the conversion loss by 1 dB.

Procedure. Using the test setup of figure 1 and the procedures of 4.7.4.1, determine a conversion loss at some convenient LO and RF frequencies within the specified range, adjusting the available RF power to the level specified for 1 dB compression maximum. Increase attenuation in ATTN R by nominally 10 dB and decrease ATTN I by the same actual value. Re-measure conversion loss. Change of 1 dB or less shall be acceptable.

NOTE: Minimum value of ATTN R and ATTN I shall neither be less than 10 dB.

4.7.4.5 Conversion desensitization. The conversion desensitization shall be determined by measuring the RF power required to increase the conversion loss by 1 dB.

Procedure. Using the test setup in figure 1 and the procedures in 4.7.4.1, determine a conversion loss at some convenient LO and RF frequencies within the specified frequency range (see 3.1). Introduce a second RF frequency and increase its power until the conversion loss increases by 1 dB. This second RF signal power shall be as specified (see 3.1).

4.7.4.6 Intermodulation. The intermodulation products of the mixer shall be tested as specified in 4.7.4.6.1 or 4.7.4.6.2.

4.7.4.6.1 Two-tone third-order intermodulation. The two-tone third-order intermodulation (LO-(2RF1-RF2)) and (LO-(2RF2-RF1)) shall be measured using the test setup of figure 6. The following details shall apply:

a. Measuring system.

(1) The measuring system dynamic range shall exceed the allowable intermodulation by at least 10 dB.

(2) The measuring system shall have flat amplitude response across the frequency range of the third-order intermodulation frequencies.

(3) Sufficient attenuation shall be provided to prevent overload of the spectrum analyzer.

(4) The power combiner hybrid network shall provide isolation of 20 dB minimum.

b. Procedures.

(1) Adjust ATTN RF1, ATTN RF2, and ATTN R to provide available power of RF1 and RF2 each equal to (LO available power - 20 dB) at the R port.

(2) Adjust spectrum analyzer sensitivity and ATTN I for LO-RF1 and LO-RF2 to indicate 0 dB relative. Measure relative level of third-order intermodulation.

(3) Increase ATTN I by 10 dB. If the levels of the four frequencies of step (2) each decrease 10 dB, the determination of step 2 is valid.

4.7.4.6.2 Harmonic intermodulation. The harmonic intermodulation product shall be measured using the test setup in figure 7. With the specified LO and RF powers (see 3.1) applied at some convenient LO and RF frequencies within the specified range, the harmonics power level in reference to the IF output shall be measured.

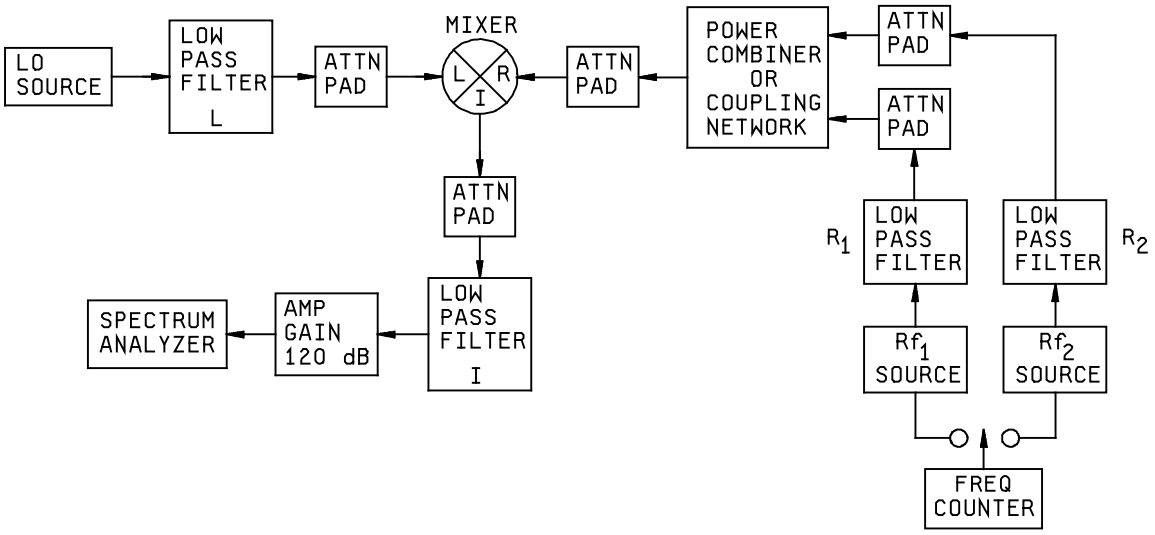

FIGURE 6. Two-tone, third-order intermodulation test setup.

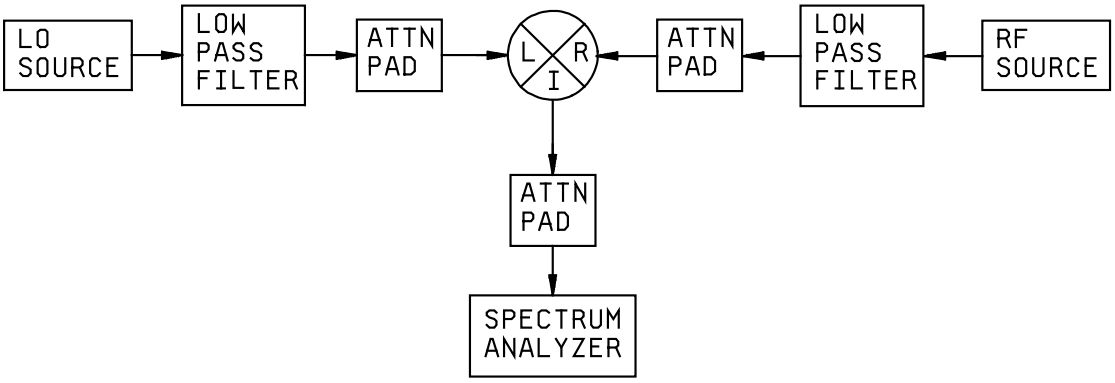

FIGURE 7. Harmonics intermodulation product test setup.

4.7.4.7 Insertion loss. The insertion loss, both reflected and dissipated using the test setup in figure 4 shall be measured from the LO port to the RF port with a dc current driven into the IF port at the specified level (see 3.1). The measurement shall be made at the low end, center, and high end or by a sweep frequency method over the specified frequency range (see 3.1).

4.7.4.8 VSWR. The VSWR at the RF and IF ports shall be measured using the test setup in figure 8. With the mixer removed from the test setup, establish a reference level on the spectrum analyzer at the center of the specified frequency range (see 3.1) by putting a short on the end of the directional coupler. Connect the RF port of the mixer to the output of the directional coupler. Apply the specified signal (see 3.1) to the LO port. Measure the reflected power on the spectrum analyzer. Repeat this procedure for the low end and high end of the specified frequency range (see 3.1). Repeat the procedure at the IF port using the specified IF frequency.

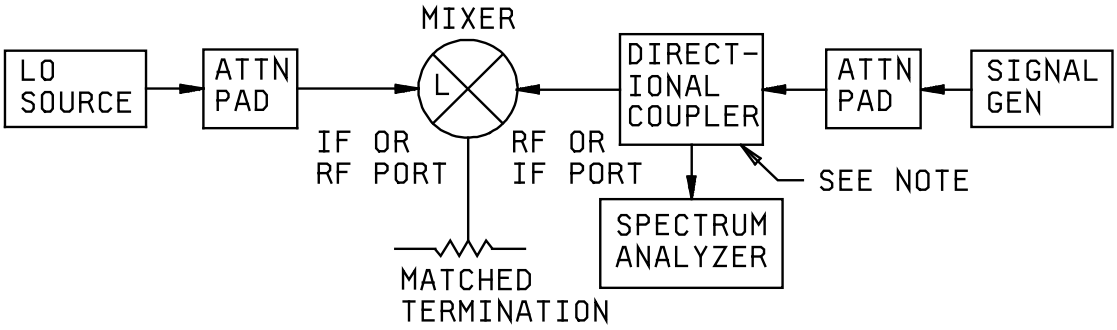

NOTE: The directivity of the directional coupler shall be such as to permit measurement of the VSWR with the appropriate accuracy.

FIGURE 8. VSWR test setup.

4.7.4.9 RF leakage. The RF leakage shall be measured using test set up on figure 9. The test equipment used to monitor and detect RF leakage shall be calibrated at the center frequency with an input power of 100 mwcw. The radiated signal strength (see figure 9) shall be measured by placing the antenna horn as close as possible to the mixer under test without making physical contact. The horn shall be oriented to any direction. The mixer shall be operated at the calibration power level.

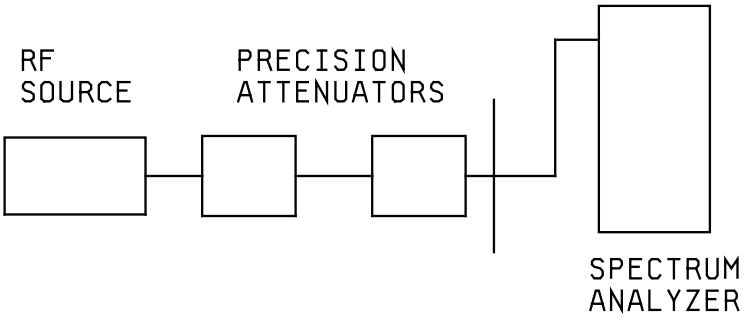

Test setup for calibration for RF leakage detector.

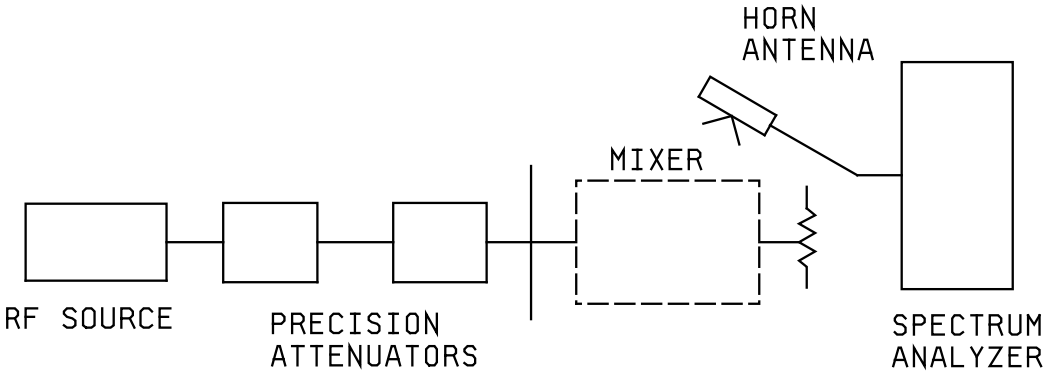

FIGURE 9. RF leakage test setup.

4.7.5 Thermal shock (see 3.8). Mixers shall be tested in accordance with method 107 of MIL-STD-202. The following detail shall apply:

Test condition letter: B, unless otherwise specified (see 3.1).

4.7.6 Vibration (see 3.9). Unless otherwise specified (see 3.1), mixers shall be tested as specified in 4.7.6.1.

4.7.6.1 High frequency. Mixers shall be tested in accordance with method 204 of MIL-STD-202. The following detail shall apply:

Test condition letter: D, unless otherwise specified (see 3.1).

4.7.6.2 Random vibration. Mixers shall be tested in accordance with method 214 of MIL-STD-202. The following detail shall apply:

Test condition: IIF and 15 minutes duration, unless otherwise specified (see 3.1).

4.7.7 Shock (see 3.10). Mixers shall be tested in accordance with method 213 of MIL-STD-202. The following shall apply:

Test condition letter: A, unless otherwise specified (see 3.1).

4.7.8 Seal (see 3.11). Mixers shall be tested as specified in 4.7.8.1, 4.7.8.2, or 4.7.8.3, as applicable (see 3.1).

4.7.8.1 Hermetic seal. Hermetically sealed mixers shall be tested in accordance with method 112 of MIL-STD-202. The following details shall apply:

a. Test condition letter: C, unless otherwise specified.

b. Procedure: IIIA or IIIC.

c. Degree of leakage rate sensitivity:

(1) 10^{-6} atm cm^3/s for mixers whose volume is greater than 2 cubic inches.

(2) 10^{-8} atm cm^3/s for mixers whose volume is 2 cubic inches or less.

4.7.8.2 O-ring seal, solder seal, or encapsulated seal. O-ring sealed, solder sealed, or encapsulated sealed mixers shall be tested in accordance with method 104 of MIL-STD-202. The following detail shall apply:

Test condition letter: B.

4.7.8.3 Dust-cover seal. When specified (see 3.1), dust cover sealed mixers shall be tested in accordance with method 103 of MIL-STD-202. The following detail shall apply:

Test condition letter: B.

4.7.9 Barometric pressure (when specified (see 3.1) (see 3.12)). Mixers shall be tested in accordance with method 105 of MIL-STD-202. The following details shall apply:

a. Method of mounting: Normal mounting means.

b. Test condition letter: C, unless otherwise specified (see 3.1).

c. Measurements after test. Electrical characteristics, as applicable (see 3.1).

4.7.10 Solderability (as applicable) (see 3.13). The terminals of the mixers shall be tested in accordance with method 208 of MIL-STD-202. The following detail shall apply:

Number of terminals: All.

4.7.11 Resistance to solvents (see 3.14). Mixers shall be tested in accordance with method 215 of MIL-STD-202. The following details shall apply:

a. Portion of the mixer to be brushed: The marked portion of the mixer.

b. Number of mixers to be tested: All.

4.7.12 Resistance to soldering heat (as applicable) (see 3.15). All mixers shall be tested in accordance with method 210 of MIL-STD-202. The following details shall apply:

a. The use of heat sinks: Not applicable.

b. Terminations not to be tested: Not applicable.

c. Special preparation: Not applicable.

d. Immersion in flux: Not applicable.

e. Depth of immersion in molten solder: .060 ±.020 (1.52 ± 0.51 mm) of header.

f. Test condition letter: B.

g. Cooling time: Stabilize to +25°C ± 1°C.

h. Examinations and measurements before and after the test: Conversion loss and seal tests.

4.7.13 Temperature extreme (see 3.16). The mixer shall be tested at both the specified high temperature and low temperature ranges (see 3.1).

4.7.14 Terminal strength (as applicable) (see 3.17). The terminals of the mixers shall be tested in accordance with method 211 of MIL-STD-202. The following details shall apply:

a. Test condition letter: A.

b. Applied force: .5 pound.

4.7.15 Moisture resistance (see 3.18). Mixers shall be tested in accordance with method 106 of MIL-STD-202.

4.7.16 Salt atmosphere (when specified, see 3.1 and 3.19). Mixers shall be tested in accordance with method 101 of MIL-STD-202. The following details shall apply:

a. Mounting: Normal mounting means.

b. Test condition letter: B.

c. Measurements after the test: Conversion loss and isolation.

4.7.17 Radiographic inspection (space flight mixers screening only). Mixers intended for space environment application shall be examined in accordance with MIL-STD-202, method 209 (see 3.20). The following shall apply:

a. A known “good” comparison reference mixer shall be available for simultaneous exposure with the device under test.

b. Two views shall be required, at 90° to each other, both perpendicular to the major (long) axis of the mixer.

c. Radiographs shall be examined under variable lighting conditions and magnification 1X to 7X for defects specified in paragraph 4 of MIL-STD-202, method 209.

d. Mixers x-rayed and found acceptable shall be identified with a blue dot, readily visible, not interfering with other markings.

e. Serialization of mixers is required and must be correlated to film views. One film copy is required shipped with the mixers. A report is required for each lot indicating the number of mixers inspected, the number found acceptable, and the number rejected.

4.7.18 Acceleration (space flight mixers screening only). Mixers intended for space environment application shall be tested in accordance with MIL-STD-202, method 212 (see 3.21), with following details applied:

a. Mounting - Normal mounting means.

b. Test condition - B. The maximum acceleration test level shall correspond with levels experienced during space environment applications (not less than 5, 000 g). Direction(s) of application shall correspond with direction(s) of maximum susceptibility of internal mixer subcomponent flexure.

c. Measurements - Electrical functionality (see 4.7.4) shall be verified (as accepted by the acquiring activity) before and after exposure to acceleration.

5. PACKAGING

5.1 Packaging. For acquisition purposes, the packaging requirements shall be as specified in the contract or order (see 6.2). When packaging of materiel is to be performed by DoD or in-house contractor personnel, these personnel need to contact the responsible packaging activity to ascertain packaging requirements. Packaging requirements are maintained by the Inventory Control Point's packaging activities within the Military Service or Defense Agency, or within the military service's system commands. Packaging data retrieval is available from the managing Military Department's or Defense Agency's automated packaging files, CD-ROM products, or by contacting the responsible packaging activity.

6. NOTES

(This section contains information of a general or explanatory nature that may be helpful, but is not mandatory.)

6.1 Intended use. Mixers covered by this specification are intended for use in military systems as balanced mixers, phase detectors, balanced modulators, amplitude modulators, pulse modulators, and current controlled attenuators.

6.2 Acquisition requirements. Acquisition documents must specify the following:

6.2.1 Mixers covered by specification sheets:

a. Title, number, and date of this specification.

b. Title, number, and date of the applicable specification sheet, and the military PIN (see 1.2).

c. ASSIST Online database at https://assist.dla.mil/ should be cited in the solicitation, and if required, the specific issue of individual documents referenced (see 2.1).

d. Additional special marking, if required.

e. Packaging (see 5.1).

f. Whether or not additional space flight component screening requirements (see 3.20, 3.21) apply.

6.2.2 Mixers not covered by specification sheets:

a. Title, number, and date of this specification.

b. Information pertaining to inspection (see 3.2).

(1) The laboratory at which the inspection is to be performed (see 4.5).
(2) Submission of samples and data (see 4.5).

c. Applicable design and construction requirements (see 3.5).

d. Additional special marking, if required.

e. Packaging (see 5.1).

6.3 First article. When first article inspection is required, the contracting officer should provide specific guidance to offerors, whether the item(s) should be a preproduction sample, a first article sample, a first production item, a sample selected from the first production items, a standard production item from the contractor's current inventory (see 3.2), and the number of items to be tested as specified in 4.5. The contracting officer should also include specific instructions in acquisition documents regarding arrangements for examinations, approval of first article test results, and disposition of first articles. Invitations for bids should provide that the Government reserves the right to waive the requirement for samples for first article inspection to those bidders offering a product which has been previously acquired or tested by the Government, and that bidders offering such products, who wish to rely on such production or test, must furnish evidence with the bid that prior Government approval is presently appropriate for the pending contract. Bidders should not submit alternate bids unless specifically requested to do so in the solicitation.

6.4 Symbols.

LO: Frequency of the local oscillator.
RF: Frequency of the RF oscillator.
IF: Intermediate frequency.
PL: Power of local oscillator input to mixer expressed in dBm.
PV: Power input to voltmeter expressed in dBm.
PF: Power attenuation to filter, expressed in dB.
PR: Power of RF source input to mixer expressed in dBm.
PL: Power of LO source input to mixer expressed in dBm.
SSB: Single side band.
NF: Noise figure.

6.5 Subject term (key word) listing.

attenuator	intermodulation	single side band
balanced	isolation	socket pins
beryllium copper	leakage	solderability
coaxial connector	local oscillator	VSWR
conversion loss	modulators	waveguide
hermetic	noise figure	waveguide flanges
insertion loss	power attenuator	

6.6 Definitions.

6.6.1 Acquiring activity. The activity responsible for all radio frequency mixer stages acquired under this specification is the acquiring activity. This activity is responsible for all waivers of first article testing.

6.7 Waveguide flanges. History has proven that waveguide flanges used on mixers that mate electrically and mechanically with flanges covered by MIL-DTL-39000 meet the requirements of this specification (see 3.4.6.2).

6.8 Waveguides (see 3.4.7). History has proven that waveguides conforming to MIL-DTL-23351 can be used successfully in manufacturing the mixers specified herein.

6.9 Tin whisker growth. The use of alloys with tin content greater than 97 percent, by mass, may exhibit tin whisker growth problems after manufacture. Tin whiskers may occur anytime from a day to years after manufacture and can develop under typical operating conditions, on products that use such materials. Conformal coatings applied over top of a whisker-prone surface will not prevent the formation of tin whiskers. Alloys of 3 percent lead, by mass, have shown to inhibit the growth of tin whiskers. For additional information on this matter, refer to ASTM-B545 (Standard Specification for Electrodeposited Coatings of Tin)

6.10 Environmentally preferable material. Environmentally preferable or Biobased materials should be used to the maximum extent possible to meet the requirements of this specification. As of the dating of this document, the U.S. Environmental Protection Agency (EPA) is focusing efforts on reducing 31 priority chemicals. The list of chemicals and additional information is available on their website at http://www.epa.gov/osw/hazard/wastemin/priority.htm. Included in the list of 31 priority chemicals are cadmium, lead, and mercury. Use of these materials should be minimized or eliminated unless needed to meet the requirements specified herein (see Section 3).

6.11 Changes from previous issue. The margins of this specification are marked with vertical lines to indicate where changes from the previous revision were made. This was done as a convenience only and the Government assumes no liability whatsoever for any inaccuracies in these notations. Bidders and contractors are cautioned to evaluate the requirements of this document based on the entire content irrespective of the marginal notations and relationship to the last previous issue.

Custodians:
Army - CR
Navy - EC
Air Force - 85
DLA - CC

Review activities:
Army - AR, MI
Navy - AS, CG, MC, OS
Air Force - 19

Preparing activity:
DLA - CC

(Project 5895-2015-003)

NOTE: The activities listed above were interested in this document as of the date of this document. Since organizations and responsibilities can change, you should verify the currency of the information above using the ASSIST Online database at https://assist.dla.mil/.