INCH-POUND
MIL-DTL-28827C
26 January 2011
SUPERSEDING
MIL-DTL-28827B
4 October 2004

DETAIL SPECIFICATION

Inactive for new design after 8 March 1999.

SWITCHES, THERMOSTATIC, (VOLATILE LIQUID), HERMETICALLY SEALED, GENERAL SPECIFICATION FOR

This specification is approved for use by all Departments and Agencies of the Department of Defense.

1. SCOPE

1.1 Scope. This specification covers the general requirements for hermetically sealed volatile liquid thermostatic switches intended primarily for use in equipment requiring rapid temperature response. The operating temperatures and operating temperature ranges of switches covered by this specification are as specified (see 3.1 and 6.1.2).

1.2 Classification.

1.2.1 Military part number. The military part number (when applicable) is to consist of the letter “M”, the basic number of the specification sheet, and an assigned dash number (see 3.1), as shown in the following example

M 28827/1-___

Military Designation	Specification Sheet Number	Coded dash letters, see individual Specification Sheet for formulation

2. APPLICABLE DOCUMENTS

2.1 General. The documents listed in this section are specified in sections 3, 4, or 5 of this specification. This section does not include documents cited in other sections of this specification or recommended for additional information or as examples. While every effort has been made to ensure the completeness of this list, document users are cautioned that they must meet all specified requirements of documents in section 3, 4, or 5 of this specification, whether or not they are listed.

2.2 Government documents.

2.2.1 Specifications, standards, and handbooks. The following specifications, standards, and handbooks form a part of this document to the extent specified herein. Unless otherwise specified, the issues of these documents are those cited in the solicitation or contract.

Comments, suggestions or questions on this document should be addressed to DLA Land and Maritime, ATTN: VAT, Post Office Box 3990, Columbus, OH 43218-3990, or emailed to switch@dla.mil. Since contact information can change, you may want to verify the currency of this address information using the ASSIST Online database at https://assist.daps.dla.mil/.

FEDERAL

STANDARDS

FED-STD-H28 - Screw-Thread Standards for Federal Services.

COMMERCIAL ITEM DESCRIPTIONS

A-A-59877 - Insulating Compound, Electrical, Embedding.

DEPARTMENT OF DEFENSE

SPECIFICATIONS

MIL-DTL-5541 - Chemical Conversion Coatings on Aluminum and Aluminum Alloys.
MIL-A-8625 - Anodic Coatings, For Aluminum and Aluminum Alloys.
MIL-PRF-15160/2 - Fuses, Instrument, Power, and Telephone

STANDARDS

MIL-STD-202 - Test Methods for Electronic and Electrical Component Parts.
MIL-STD-1276 - Leads, Weldable, for Electronic Component Parts.
MIL-STD-1285 - Marking of Electrical and Electronic Parts.

(Copies of these documents are available online at https://assist.daps.dla.mil/quicksearch or from the Standardization Document Order Desk, 700 Robbins Avenue, Building 4D, Philadelphia, PA 19111-5094.)

2.3 Non-Government publications. The following documents form a part of this document to the extent specified herein. Unless otherwise specified, the issues of these documents are those cited in the solicitation or contract.

AMERICAN SOCIETY FOR TESTING AND MATERIAL (ASTM)

ASTM-D635 - Plastics In a Horizontal Postition, Rate OF Burning and / or Extent and Time of Burning of
ASTM-D4066 - Nylon Injection and Extrusion Materials (PA)
ASTM-D5948 - Compounds, Molding, Thermosetting
ASTM-G21 - Materials to Fungi, Synthetic Polymeric, Determining Resistance of

(Application for copies can be found online at http://www.astm.org/ or should be addressed to the American Society for Testing and Materials, 100 Barr Harbor Drive, P.O.Box C700, West Conshohocken, PA, 19428-2959).

INTERNATIONAL ORGANIZATION FOR STANDARDS (ISO)

ISO 10012-1 - Quality assurance requirements for measuring equipment - Part 1; Meteorological confirmation system for measuring equipment.

(Application for copies can be found online at http://www.ansi.org/ or 25 West 43rd Street, New York, NY 10036-8002, telephone 212-642-4900, fax 212-302-1286)

IPC – ASSOCIATION CONNECTING ELECTRONICS INDUSTRIES

J-STD-004 - Soldering Fluxes Requirements For
J-STD-005 - Soldering Pastes Requirements For
J-STD-006 - Electronic Grade Solder Alloys and Fluxed and Non-Fluxed Solid Solders For Electronic Soldering Applications Requirements For

(Copies of these documents are available online at www.ipc.org or from Association Connecting Electronics Industries, 2215 Sanders Road, Northbrook, Illinois, 60062-6135, United States.)

NATIONAL CONFERENCE OF STANDARDS LABORATORIES

NCSL Z540.3 - General Requirements for Calibration Laboratories and Measuring and Test Equipment.

Copies of these documents can be obtained online at http://www.ncsli.org or by contacting National Conference of Standards Laboratories, 2995 Wilderness Place, Suite 107, Boulder, CO 80310-5404

SOCIETY OF AUTOMOTIVE ENGINEERS

SAE AMS-I 10 - Insulation Compound, Electrical, Ceramic, Class L
SAE-AS50861 - Wire, Electric, Hookup and Interconnecting, Polyvinyl Chloride-Insulated, Copper and Copper Alloy Conductor.
SAE-AS58091 - Circuit Breakers, Trip-Free, Aircraft, General Specification for.
SAE AS7928 - Terminals, Lug: Splices, Conductor: Crimp Style, Copper, General Specification for

(Application for copies can be found online at http://www.sae.org or should be addressed to the Society Of Automotive Engineers (SAE) World Headquarters, 400 commonwealth Drive, Warrendale, PA 15096-0001)

2.4 Order of precedence. In the event of a conflict between the text of this document and the references cited herein (except for related specification sheets), the text of this document takes precedence. Nothing in this document, however, supersedes applicable laws and regulations unless a specific exemption has been obtained.

3. REQUIREMENTS

3.1 Specification sheets. The individual item requirements shall be as specified herein and in accordance with the applicable specification sheets. In the event of any conflict between requirements of this specification and the specification sheet, the latter shall govern (see 6.1).

3.1.1 Switch categories. Switches furnished under this specification shall be category I or II as defined herein.

3.1.2.1 Category I. Switches completely defined by a military specification sheet.

3.1.2.2 Category II. Switches the same as category I, except for minor differences such as terminations, mounting means, or temperature settings, which do not change the basic design or construction of the qualified switch. Category II shall be procured from a source listed on the applicable qualified products list for the particular similar product in category I. Category II switches are nonstandard.

3.2 Qualification. Switches furnished under this specification shall be products that are authorized by the qualifying activity for listing on the applicable qualified products list before contract award (see 4.5 and 6.2).

3.3 Material. Material shall be as specified herein. However, when a definite material is not specified, a material shall be used which will enable the switches to meet the performance requirements of this specification. Acceptance or approval of any constituent material shall not be construed as guaranty of the acceptance of the finished product.

3.3.1 Fungus resistance. All material shall be inert or fungus resistant in accordance with ASTM-G21.

3.3.2 Metals. All metals parts, other than current-carrying parts, shall be of corrosion-resistant material, or shall be suitably protected to resist corrosion. Paint is not acceptable for corrosion protection.

3.3.2.1 Dissimilar metals. When dissimilar metals are used in intimate contact with each other, protection against electrolysis and corrosion shall be provided. The use of dissimilar metals which, in contact, tent toward active electrolytic corrosion (particularly brass, copper, or steel used in contact with aluminum or aluminum alloy) is not acceptable. However, metal plating or metal spraying of dissimilar base metals to provide similar or suitable butting surfaces is permitted. The use of dissimilar metals separated by a suitable insulating material is also permitted

3.3.2.2 Magnesium. Magnesium and magnesium alloys shall not be used.

3.3.2.3 Aluminum. Aluminum and aluminum alloys shall be suitably protected against corrosion. When anodized, it shall be in accordance with MIL-A-8625. Internal parts not in contact with the media or subject to wear may be chemically treated in accordance with MIL-DTL-5541.

3.3.2.4 Solder. Solder shall have a minimum melting point of 100°F above the maximum temperature rating of the temperature switch and shall conform to J-STD-006. Where solder is employed, flux shall be in accordance with J-STD-004. When stainless steel is used, corrosive flux may be used providing the device is cleaned and the flux is neutralized prior to final assembly.

3.3.2.5 Pure tin. The use of pure tin, as an underplate or final finish, is prohibited both internally and externally. Tin content of switch components and solder shall not exceed 97 percent, by mass. Tin shall be alloyed with a minimum of 3 percent lead, by mass (see 6.3)

3.3.3 Nonmetals. Switches shall not be adversely affected by weathering and aircraft, missile, and spacecraft fluids, at the temperature specified for the applicable switch.

3.3.3.1 Plastic. Unless otherwise specified (see 3.1), thermosetting plastics shall be in accordance with ASTM-D5948; however, cotton or wood-cell-filled materials shall not be used. Thermoplastics shall not be used for the switch case or cover. When used for non-case material, thermoplastic material shall be in accordance with Type I of ASTM-D4066. The plastic material used shall be self-extinguishing when tested in accordance with ASTM D635, as applicable, to the thinnest section of the material used. The self-extinguishing requirement applies to all materials for external parts and enclosures regardless of whether the material used is procured to a Military Specification or not.

3.3.3.2 Ceramic. Ceramic insulating material shall conform to SAE AMS-I-10, Grade L411 or better.

3.3.3.3 Potting compounds. Potting compounds used in contact with the atmosphere shall be in accordance with A-A-59877 and shall be compatible with the design requirements of the switch.

3.3.4 Weldability. Leads designed for weldability shall conform to requirements of MIL-STD-1276, type K.

3.3.5 Screw terminals. Screw terminals shall be provided with hardware as specified (see 3.1 and 6.1.2). Lock washers shall be captive to the screw. For direct Government orders, all terminal hardware shall be assembled in proper order.

3.4 Design and construction. Switches covered by this specification shall be of the design, construction, and physical dimensions specified (see 3.1 and 6.1.2). Switches shall be so constructed as to ensure proper operation when mounted in any position.

3.4.1 Tamperproof calibration. Unless otherwise specified (see 3.1 and 6.1.2), the switches shall be sealed in such a manner that any tempering with the calibration after final adjustment by the manufacturer shall require dismantling of the switch or the breaking of a seal. The seal shall not be easily broken by manual force or without the use of any device considered a tool, for example, screwdriver, pliers, soldering iron, and so forth.

3.4.2 Solder terminals. Solder terminals shall be treated to facilitate soldering. The terminal design shall be such that a mechanical connection can be made prior to soldering. Acceptable solder terminal designs are turret, hook, pierced, or post type.

3.4.3 Mounting. Mounting shall be as specified (see 3.1 and 6.1.2). Stud mounting shall have threads in accordance with FED-STD-H28.

3.4.4 Weight. Weight shall be as specified (see 3.1 and 6.1.2).

3.5 Electrical ratings. The electrical ratings shall be as specified (see 3.1 and 6.1.2).

3.6 Solderability (when applicable, see 3.1). When switches are tested as specified in 4.7.2, 95 percent of the total length of fillet, which is between the standard wrap wire and the terminal, shall be tangent to the surface of the terminal being tested. There shall be no pinholes, voids, and so forth. A ragged or interrupted line at the point of tangency between the fillet and the terminal under test shall be considered a defect. After the test, there shall be no evidence of fracture, loosening of parts, or any other mechanical failure of the switches.

3.7 Calibration. When switches are tested as specified in 4.7.3, the operating points for the opening and closing temperature shall be within the tolerances specified (see 3.1 and 6.1.2).

3.8 Proof temperature. When switches are tested as specified in 4.7.4, there shall be no evidence of damage and the operating points shall be within the tolerance specified.

3.9 High temperature exposure. When switches are tested as specified in 4.7.5, the operating points shall be within the tolerance specified in 4.7.5.

3.10 Low temperature exposure. When switches are tested as specified in 4.7.6, the operating points shall be within the tolerances specified in 4.7.6.

3.11 Time constant. When switches are tested as specified in 4.7.7, the time required for the switch to actuate shall be as specified (see 3.1).

3.12 Proof pressure (when specified, see 3.1). When switches are tested as specified in 4.7.8, there shall be no evidence of leakage or damage, and the operating points shall be within the tolerances specified (see 3.1).

3.13 Seal (hermetic). When switches are tested as specified in 4.7.9, the leakage rate shall not exceed 1×10^{-8} standard atmosphere cubic centimeters per second (atm cc/sec).

3.14 Dielectric withstanding voltage. Unless otherwise specified (see 3.1 and 6.1.2), when switches are tested as specified in 4.7.10, there shall be no flashover, arcing, or current flow in excess of 1 milliampere.

3.15 Insulation resistance. When initially measured as specified in 4.7.11, the insulation resistance between all insulated terminals and enclosures shall be not less than 1000 megaohms.

3.16 Contact resistance. Unless otherwise specified (see 3.1 and 6.1.2), when measured as specified in 4.7.12, the initial contact resistance shall not exceed 100 milliohms: following the endurance test, contact resistance shall not exceed 250 milliohms.

3.17 Connector torque (applicable to switches with electrical connectors). When switches are tested as specified in 4.7.13, there shall be no loosening, rotation, distortion, short circuit or other damage. The operating points shall be within the tolerances specified (see 3.1).

3.18 Terminal strength (when applicable). When switches are tested as specified in 4.7.14, there shall be no breakage, loosening, or rotating of terminals, and no damage to the switch body.

3.19 Short circuit (when specified, see 3.1). When switches are tested as specified in 4.7.15, there shall be no welding or sticking of contacts, or other damage. Switches shall be mechanically and electrically operative at the end of the test.

3.20 Vibration. Unless otherwise specified (see 3.1 and 6.1.2), when switches are tested as specified in 4.7.16, closing of open contacts and opening of closed contacts shall not exceed 250 microseconds. The operating points shall be within the tolerance specified (see 3.1).

3.21 Shock. Unless otherwise specified (see 3.1 and 6.1.2), when switches are tested as specified in 4.7.17, there shall be no change in operation, or evidence of broken, deformed, displaced, or loose parts.

3.21.1 Method I (shock, specified pulse) (see 3.1 and 6.1.2). When switches are tested as specified in 4.7.17.1, closing of open contacts and opening of closed contacts shall not exceed 250 microseconds, unless otherwise specified (see 3.1 and 6.1.2).

3.21.2 Method II (high-impact shock) (see 3.1 and 6.1.2). When switches are tested as specified in 4.7.17.2, closing of open contacts and opening of closed contacts shall not exceed 5 milliseconds, unless otherwise specified (see 3.1 and 6.1.2).

3.22 Overload cycling. When switches are tested as specified in 4.7.18, there shall be no mechanical or electrical failure.

3.23 Endurance. When switches are tested as specified in 4.7.19, each contact shall open and close its circuit in proper sequence during each cycle. During and after the cycling, there shall be no evidence of malfunction, damage, or leakage, and the operating points shall be within the tolerances specified (see 3.1).

3.24 Salt spray (corrosion). When switches are tested as specified in 4.7.20, switches shall show no evidence of destructive corrosion. After the test, any mounting hardware (if applicable) shall be readily removable. NOTE: Destructive corrosion shall be construed as being any type of corrosion which in any way interferes with the mechanical or electrical performance, or in the case of plated metals, corrosion which has passed through the plating and attacked the base metal

3.25 Marking. Switches shall be marked in accordance with MIL-STD-1285 with the military part number or the manufacturer's part number when specified (see 6.1.2), date code, and the manufacturer's trademark or code symbol.

3.26 Workmanship. Switches shall be proposed in such a manner as to be uniform in quality and shall be free from cracked or displaced parts, sharp edges, burrs, and other defects which will affect life, serviceability, or appearance.

4. VERIFICATION

4.1 Classification of inspection. The inspection requirements specified herein are classified as follows

a. Materials inspection (see 4.3).
b. Qualification inspection (see 4.5).
c. Conformance inspection (see 4.6).

4.2 Test equipment and inspection facilities. Test and measuring equipment and inspection facilities of sufficient accuracy, quality and quantity to permit performance of the required inspection shall be established and maintained by the contractor. The establishment and maintenance of a calibration system to control the accuracy of the measuring and test equipment shall be in accordance with ISO-10012-1 and NCSL Z540-3.

4.3 Materials inspection. Materials inspection shall consist of certification supported by verifying data that the materials listed in table I, used in fabricating the switches, are in accordance with the applicable referenced specification or requirements prior to such fabrication.

TABLE I. Materials inspection.

Component material	Requirement paragraph	Applicable specification
Fungus resistant	3.3.1	ASTM-G21
Aluminum	3.3.2.3	MIL-A-8625 and MIL-DTL-5541
Solder	3.3.2.4	J-STD-004, J-STD-005, and J-STD-006
Solder flux	3.3.2.4	J-STD-004, J-STD-005, and J-STD-006
Plastic	3.3.3.1	ASTM-D5948, ASTM-D4066-82, and ASTM D635
Ceramic	3.3.3.2	SAE AMS-I-10
Potting compounds	3.3.3.3	A-A-59877

4.4 Inspection conditions. Unless otherwise specified herein, all tests and measurements required by this specification shall be made at room ambient conditions, in accordance with the MIL-STD-202.

4.5 Qualification inspection. Qualification inspection shall be performed at a laboratory acceptable to the Government (see 6.2) on sample units produced with equipment and procedures normally used in production.

4.5.1 Sample size. Twelve switches shall be subjected to qualification inspection.

4.5.2 Inspection routine. The sample shall be subjected to the inspection specified in table II, in the order shown. Sample units shall be grouped as shown in table II.

4.5.3 Failures. One or more failures shall be cause for refusal to grant qualification approval.

4.5.4 Extent of qualification.

4.5.4.1 Single submission. Qualification shall be restricted to the switch submitted.

4.5.4.2 Group submission. If samples satisfactorily pass the qualification inspection, other switches from the same manufacturer that have the same operation or reverse operation, and the same design, construction, switching characteristics, and physical dimensions will be considered qualified by the Government without further qualification inspection.

4.5.4.2.1 Additional qualification. Qualification will be extended to switches of the same design and construction as qualified switches, provided the following criteria are met under the following conditions

a. The shock rating is the same or less.
b. The altitude rating is the same or less.
c. The vibration rating is the same or less.
d. The endurance rating is the same or less.
e. The acceleration rating is the same or less.
f. The high temperature is not above that of the qualified switch with the highest setting.
g. The lowest temperature setting is not lower than that of the qualified switch with the lowest setting.
h. Switches are the same contact action or reverse contact action as the qualified type.

TABLE II Qualification inspection

Examination or test	Requirement paragraph	Method paragraph
Group I (12 sample units)		
Visual and mechanical examination	3.1, 3.3, 3.4, 3.25 and 3.26	4.7.1
Solderability 1/ (when applicable)	3.6	4.7.2
Calibration	3.7	4.7.3
Proof temperature	3.8	4.7.4
Time constant	3.11	4.7.7
Proof pressure (when specified)	3.12	4.7.8
Seal	3.13	4.7.9
Dielectric withstanding voltage	3.14	4.7.10
Insulation resistance	3.15	4.7.11
Contact resistance	3.16	4.7.12
Group II (2 sample units from group I shall be included and identified in this group)		
Salt spray (corrosion)	3.24	4.7.20
Group III (4 sample units from group I)		
High temperature exposure	3.9	4.7.5
Low temperature exposure	3.10	4.7.6
Connector torque (when applicable)	3.17	4.7.13
Terminal strength (when applicable)	3.18	4.7.14
Short circuit (when applicable)	3.19	4.7.15
Group IV (6 sample units from group I)		
Vibration	3.20	4.7.16
Shock	3.21	4.7.17
Overload cycling	3.22	4.7.18
Endurance 2/	3.23	4.7.19

See footnotes at end of table.

TABLE II Qualification inspection – Continued.

Examination or test	Requirement paragraph	Method paragraph
Group V (all sample units from groups III and IV)		
Visual and mechanical examination	3.1, 3.3, 3.4 3.25 and 3.26	4.7.1
Calibration	3.7	4.7.3
Proof temperature	3.8	4.7.4
Time constant	3.11	4.7.7
Proof pressure (when specified)	3.12	4.7.8
Seal	3.13	4.7.9
Dielectric withstanding voltage	3.14	4.7.10
Insulation resistance	3.15	4.7.11
Contact resistance	3.16	4.7.12

1/ Three sample units only.
2/ Three sample units of the lowest temperature setting for which qualification is sought and three sample units of the highest setting for which qualification is sought (see 3.1).

4.5.5 Retention of qualification. To retain qualification, the contractor shall submit a summary of the results of the tests performed for inspection of product for delivery (group A) and a certification of compliance at yearly intervals via the Government quality assurance representative. The summary of group A shall indicate the number and type of failures together with corrective action taken to correct failures. The certification of compliance shall include verification that materials, processes, and quality control have not changed. Failure to submit the group A summary and the test results indicates nonconformance with the specification requirements, and corrective action acceptable to the qualifying activity has not been taken, action may be taken to remove the failing product from the qualified products list.

4.6 Conformance inspection.

4.6.1 Inspection of product for delivery. Inspection of product for delivery shall consist of group A inspection.

4.6.1.1 Inspection lot. An inspection lot shall consist of all switches of the same type produced under essentially the same conditions, and offered for inspection at one time.

4.6.1.2 Group A inspection. Group A inspection shall consist of the examinations and tests specified in table III, in the order shown.

4.6.1.2.1 Sampling plan. Statistical sampling shall be in accordance with table IV. A randomly selected group(s) of samples is required. For acceptance of the lot, there shall be zero occurrences of defects.

4.6.1.2.2 Rejected lots. If an inspection lot is rejected, the supplier may rework it to correct the defects, or screen out the defective units, and resubmit for reinspection. Resubmitted lots shall be inspected using tightened inspection. Such lots shall be separate from new lots, and shall be clearly identified as reinspected lots.

4.6.1.2.3 Disposition of sample units. Sample units which have passed all the group A inspection may be delivered on the contract or purchase order, if the lot is accepted and the sample units are still within specified electrical tolerance.

TABLE III Group A inspection

Examination or test	Requirement paragraph	Method paragraph
Visual and mechanical examination	3.1, 3.3, 3.4 3.25 and 3.26	4.7.1
Calibration	3.7	4.7.3
Proof temperature	3.8	4.7.4
Proof pressure (when specified)	3.12	4.7.8
Seal	3.13	4.7.9
Dielectric withstanding voltage	3.14	4.7.10

1/ 100 percent inspection required, in process inspection may be used to satisfy this requirement.

TABLE IV. Zero defect sampling plan.

Lot size	Minimum number of switches to be tested
1 - 12	All
13 - 150	13
151 - 280	20
281 - 500	29
501 - 1,200	34
1,201 - 3,200	42
3,201 - 10,000	50
10,001 - 35,000	60

4.7 Methods of examination and test.

4.7.1 Visual and mechanical examination. Switches shall be examined to verify that the materials, design, construction, physical dimensions, marking and workmanship are in accordance with the applicable requirements (see 3.1, 3.3, 3.4, 3.25, and 3.26).

4.7.2 Solderability (applicable to solderable terminals) (see 3.6). Switches shall be tested in accordance with method 208 of MIL-STD-202. The following details and exceptions shall apply:

a. Number of terminals to be tested – All.
b. Depth of immersion in molten solder – Terminals shall be immersed to the maximum extent possible.
c. Examination of terminals – Method for evaluation of lugs and tabs shall apply.
d. Dipping machine – Need not be used.

4.7.3 Calibration (see 3.7). The switch sensing element shall be in stalled into a circulating liquid bath at an initial temperature of at least 10 degrees below the switch actuating temperature. The temperature shall then be increased until the switch actuates and the actuation point recorded. The temperature of the liquid bath shall then be decreased until the switch deactuates, and the deactuation point recorded. This procedure shall be repeated for a total of two times, and the rate of change shall not exceed one degree per minute within 10 degrees of the switching points. Circulating air ovens shall not be used for calibration unless the actuation point exceeds 600°F.

4.7.3.1 Circulating liquid bath. The test bath shall contain a liquid capable of safely operating at the maximum test temperature consistently within ± 0.5°F, and with a maximum viscosity of 20CS at the actuation point of the switch. The bath shall maintain a minimum velocity of 15 feet per minute perpendicular to the sensing probe throughout the test. Bath temperature shall be monitored with a platinum resistance probe and bridge or equivalent devices capable of measuring temperature within ± 0.5°F accuracy.

4.7.3.2 Circulating air oven. Air ovens are recommended for test temperatures above 600°F. The oven must maintain an air stream velocity perpendicular to the sensing probe of 5400 feet per minute, and a consistent temperature (±2°F) within the air stream. The air stream temperature shall be monitored with a platinum resistance probe and bridge or equivalent device capable of measuring temperature within ± 1°F.

4.7.4 Proof temperature (see 3.8). Switch sensing element shall be exposed to a proof temperature for one minute or as specified, either liquid or air test devices may be used for this test. Following this test, the actuation and deactuation points shall be within the tolerance specified.

4.7.5 High temperature exposure (see 3.9). Switches shall be subjected to the highest non-operating ambient temperature specified (see 3.1) for a minimum of 12 hours. After this period, the temperatures shall be changed to the highest operating temperature specified and held for a minimum of two hours. Then, while at this temperature, the switches shall be tested in accordance with calibration (see 4.7.3).

4.7.6 Low temperature exposure (see 3.10). Switches shall be subjected to the lowest non-operating ambient temperature specified (see 3.1) for a minimum of 12 hours. After this period, the temperature shall be changed to the lowest operating temperature specified and held for a minimum of two hours. Then, while at this temperature, the switches shall be tested in accordance with calibration (see 4.7.3).

4.7.7 Time constant (see 3.11). The time constant test facility shall consist of a drum containing a circulating liquid. The bath temperature shall be such that the actuation point of the thermal switch is 63 percent of the difference between the ambient temperature at the test facility and the bath temperature, see figure 1. The switch sensing probe shall be immersed in the bath, and the time to actuation recorded. The switch shall be removed from the bath after actuation and cooled to room temperature before each immersion. The test shall be repeated for a total of three times. The time constant shall be the average of the three test values.

4.7.7.1 Time constant (alternate method). For switches where the bath temperature will exceed 600°F a flowing air stream of specified velocity and density shall be used as a substitute for the oil bath. The same basic procedures shall apply.

4.7.8 Proof pressure (see 3.12). Switches shall be connected to a device supplying the specified media or approved substitute at a pressure which can be varied from zero to at least the proof pressure specified (see 3.1). The pressure shall then be increased to the proof pressure and maintained for one minute. There shall be no evidence of leakage or deformation.

4.7.9 Seal (see 3.13). Switches shall be tested in accordance with method 112 of MIL-STD-202. The following details shall apply:

a. Test condition – C.
    1. Procedure III or IV; leakage-rate sensitivity – $1x10^{-8}$ atm cm^3/s, for checking gross leaks, test condition B.
    2. For procedure IV – Reduced pressure of the chamber and duration of pressurization – Determination made in accordance with the type of equipment used.
b. Measurements after test – None.

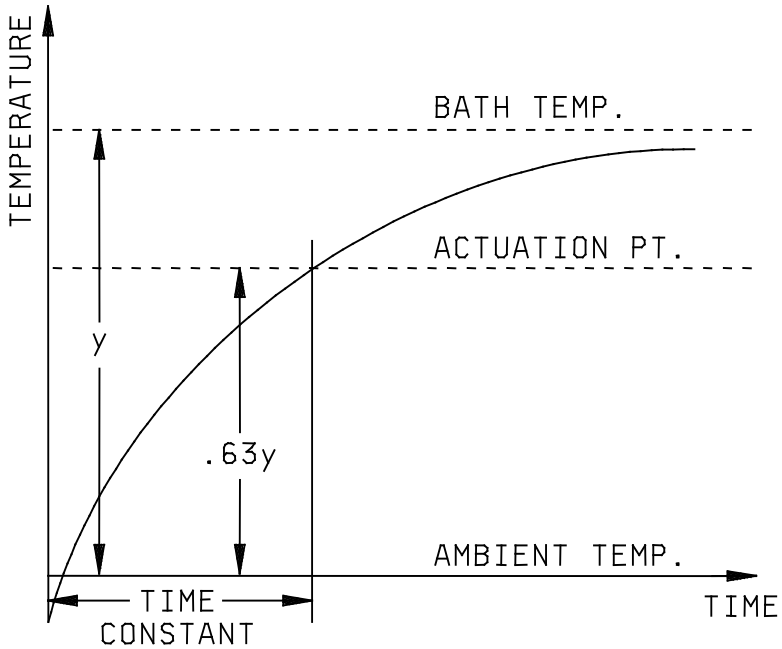

FIGURE 1. Temperature response vs time.

4.7.10 Dielectric withstanding voltage (see 3.14). Switches shall be tested in accordance with 4.7.10.1 and, when applicable (see 3.1 and 6.1.2), in accordance with 4.7.10.2. This test shall be performed with the switch in normal position, and shall then be repeated for other operating positions.

4.7.10.1 At atmospheric pressure. Switches shall be tested in accordance with method 301 of MIL-STD-202. The following details shall apply:

a. Magnitude of test voltage – 1,000 volts plus twice the working voltage for initial test and 1,000 volts for subsequent tests.
b. Nature of potential – AC.
c. Duration of application of test voltage – 1 minute for qualification tests, 5 seconds for group A tests at 20 percent higher voltage.
d. Points of application of test voltage – Between all terminals and ground.
e. Maximum leakage current – 1 milliampere, unless otherwise specified (see 3.1 and 6.1.2).
f. Examination after test – Switches shall be examined for evidence of arcing and flashover.

4.7.10.2 At reduced barometric pressure. Switches designed for operation above 10,000 feet shall be tested as specified in 4.7.10.1, and in accordance with method 105 of MIL-STD-202. The following details and exception shall apply:

a. Method of mounting – Normal mounting means.
b. Test condition – The reduced pressure utilized shall be that of the rated altitude of the switch (see 3.1).
c. Test voltage – 500 volts, unless otherwise specified (see 3.1 and 6.1.2).

4.7.11 Insulation resistance (see 3.15). Switches shall be tested in accordance with method 302 of MIL-STD-202. The following details shall apply:

a. Test condition – B.
b. Points of measurement – Between all terminals and frame or ground.

4.7.12 Contact resistance (see 3.16). Switch contacts shall be tested in accordance with method 307 of MIL-STD-202. The following details and exception shall apply:

a. Measurements – Between the terminals of the contacts of the same pole forming a switching circuit; for all poles in a switch at each of the temperature settings; between mated contacts for all poles.
b. Test current and maximum test voltage: The test current and test voltage may be of any values compatible with the test method employed, but shall not exceed the rated values of the switch (see 3.1).
c. Number of activations prior to measurement – Not applicable.
d. Number of test activations – Three.
e. Number of measurements per activation – One reading after each thermal actuation.

4.7.13 Connector torque (applicable to switches with electrical connectors) (see 3.17). Switches shall be mounted by their normal mounting means on a rigid metal fixture. A torque of five foot-pounds shall be applied to the electrical connectors, in a plane perpendicular to its central axis and in the direction which would tighten the mating part, and held for one minute. If the normal mounting means of the switch includes some type of strip or clamp which would permit rotation of the entire switch in its mounting device during this test, the switch shall be held stationary by suitable mechanical restraints while the torque is applied. This test is intended as a verification of connector mounting suitability, and is not meant to conform integrity of connector design or construction. Following this test, switches shall be tested in accordance with calibration (see 4.7.3).

4.7.14 Terminal strength (when applicable) (see 3.18). Terminals shall be tested in accordance with 4.7.14.1 or 4.7.14.2, as applicable. Unless otherwise specified (see 3.1), switches shall be mounted by their normal mounting means.

4.7.14.1 Threaded terminals. Threaded terminals shall be subjected, for one minute to the applicable static values for force and torque specified in table V. The force shall be gradually applied as a pull along the axis of the threads, perpendicular to the axis of the threads, and in the direction most likely to cause failure. The torque shall be applied in the direction which will tighten the screws.

TABLE V Static values of force and torque.

Thread size	Force (pounds)	Torque (inch-pounds)	
		Steel	1/ Non-ferrous
4-40	5	8	5
6-32	30	14	10
8-32	35	22	20
10-32	40	38	32
10-24	40	42	35
1/4-28	50	100	75

1/ The torque values are intended as a test for terminals and not for terminal hardware. Where brass terminal screws are used, it may be necessary to substitute steel screws for the purpose of this test as torque values exceed shear strength of brass screws in certain sizes.

4.7.14.2 Solder-lug and wire load terminals. Switches shall be tested in accordance with method 211 of MIL-STD-202. The following details and exceptions shall apply:

a. Test condition letter – A.
b. Applied force
   1. Solder lug – 9 pounds.
   2. Wire-lead – 15 pounds, unless otherwise specified (see 3.1).
c. Direction of force – Force shall be applied along three mutually perpendicular axes of the terminal, one direction of which shall be the one most likely to cause failure, unless otherwise specified (see 3.1).

4.7.15 Short circuit (when specified, see 3.1) (see 3.19). Switches shall be inserted in a circuit which has been calibrated using a dummy switch, and which will supply a current equal to 15 times the rated resistive load at the lowest dc voltage specified (see 3.1), when monitored through the switch contacts. Each switch shall be connected in series, by 1-foot lengths of wire, to a thermal-type circuit breaker or a fuse in accordance with figure 2 and table VI. A circuit breaker shall be used for switches having a rated resistive load of 5 amperes or greater, and a fuse for switches having free air as listed in SAE-AS50861 and table VI, determined by the rated resistive load of the switch (see 3.1). If the rated load of the switch does not coincide with a wire size, the next larger wire size shall be used. The terminals shall be in accordance with SAE-AS7928. The circuit breaker shall be in accordance with SAE-AS58091 and table VI, and fuses shall be in accordance with and table VI, and of the same current rating as the resistive current rating of the switch. Calibration shall be made without the circuit breaker (or fuse), test switch, or switch leads in the circuit. With both the switch under test and the circuit breaker in a closed position, and with switch S_2 in the position shown on figure 2, the circuit shall be closed manually by switch S_1. A minimum of 2 minutes shall elapse between the successive closings of the switch. The test shall be conducted five times.

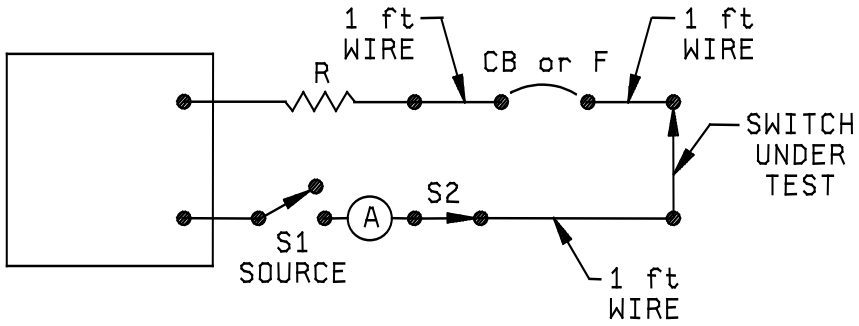

FIGURE 2. Circuit diagram for short circuit test.

TABLE VI Short circuit wire sizes and circuit breaker or fuse designations

Resistive rating at lowest voltage, amperes	Specification SAE-AS50861 wire size	Circuit breaker or fuse
Less than 5	AN-20	MIL-PRF-15160/2, characteristic A, rating, as applicable
5	AN-20	MS25017-5
7.5	AN-18	MS25017-7
10	AN-18	MS25017-10
15	AN-18	MS25017-15
18	AN-16	MS25017-20
20	AN-16	MS25017-20
25	AN-14	MS25017-25
30	AN-14	MS25017-30
40	AN-12	MS25017-50

4.7.16 Vibration (see 3.20). Switches shall be tested in accordance with 4.7.16.1 or 4.7.16.2, as specified (see 3.1). The following details and exceptions shall apply:

a. Tests and measurements prior to vibration – Not applicable.
b. Mounting – Switches shall be mounted by their normal mounting means on a rigid metal panel. The mounting fixture shall be free from resonances over the test frequency range.
c. Electrical load conditions – The electrical load shall consist of the monitor circuit only.
d. Measurements during vibration – Switch contact stability shall be continuously monitored during vibration. If more than one contact pair is being monitored simultaneously by one chatter indicator, open contact pairs shall be connected in parallel and closed contact pairs shall be connected in series during this test. In the event of indication of a contact opening greater than specified, the test shall be modified so that switches may be individually tested to determine if a switch is defective.
e. Measurements after vibration – Calibration (see 4.7.3).
f. Examination after test – Switches shall be examined for change in actuated position, and evidence of broken, deformed, displaced or loose parts.

4.7.16.1 Vibration, high frequency

a. Method 204 of MIL-STD-202.
b. Test condition letter – A, B, C, or D as specified (see 3.1).
c. Method of determining resonance, and measurements during test – All checks for resonance and contact disturbance shall be conducted with the switches being cycled between actuation and deactuation at a switching rate of three cycles per minute, with the temperature rise and decay rate not exceeding 10 degrees per minute within 10 degrees of the switching points.
d. Switches shall be subjected to two cycles of operation at each of the following frequencies – 5, 10, 20, 40, 80, 100, and every 100 Hz to and including 2,000 Hz, except that test condition A shall be to 500 Hz. If resonance is detected, the switches shall be vibrated for 20 minutes at each resonance observed.
e. Contact disturbances shall be monitored within 10 percent of the switching points on a multi-channel recording device with a minimum response of 2,000 Hz at tape speeds (inches per second) sufficient to indicate a 250 microsecond time interval.
f. The recordings need not be submitted with the qualification test report. However, the report shall state that the test was successfully accomplished, the recordings shall be maintained by the manufacturer for the three year period, and the recording shall be made available upon request by the preparing activity.

4.7.16.2 Vibration, random.

a. Method 214 of MIL-STD-202.
b. Test condition II, letter E, 1.5 hours.

4.7.17 Shock (see 3.21). Switches shall be tested in accordance with 4.7.17.1 and, in addition, to 4.7.17.2, when specified (see 3.1). The following details and exception shall apply to both methods.

a. Contact chatter shall be monitored in accordance with method 310 of MIL-STD-202.
b. Mounting – Switches shall be mounted by their normal mounting means.
c. Electrical load conditions – The electrical load shall consist of the monitor circuit only.
d. Temperature conditions – Half of the switches shall be tested in the deactuated position at 10°C below the actuation temperature, and half the switches shall be tested in the actuated position at 10°C above the deactuation temperature.
e. Measurements during shock – Switch contact stability shall be continuously monitored during shock. If more than one contact pair is being monitored simultaneously by one chatter indicator, open contact pairs shall be connected in parallel and closed contact pairs shall be connected in series during this test. In event of indication of a contact opening greater than specified, the test shall be modified by applying successive identical blows in the same plane to monitor contacts, switch by switch, to determine if a switch is defective.
f. Measurements after shock – Switches shall be tested in accordance with calibration (see 4.7.3).
g. Examination after test – Switches shall be examined for evidence of broken, deformed, displaced, or loose parts.

4.7.17.1 Method I, specified pulse.

a. Method 213 of MIL-STD-202.
b. Test condition – C.
c. Allowable contact opening or closure – 250 microseconds maximum.

4.7.17.2 Method II, high impact.

a. Method 207 of MIL-STD-202.
b. Allowable contact opening or closure – 5 milliseconds maximum.

4.7.18 Overload cycling (see 3.22). Each switch shall be tested for overload cycling using the same voltage, electrical frequency, and the same pair(s) of contacts that will subsequently be used for the electrical endurance test. The switches shall close and open the overload current of a resistive circuit equal to 150 percent of the resistive load rating at the particular voltage and electrical frequency. The cycling rate shall not exceed 6 cycles of operation per minute. Fifty cycles of operation shall be performed. The duty cycle shall be approximately 50 percent on, 50 percent off.

4.7.19 Endurance (see 3.23). Switches shall be subjected to the specified number of cycles of make-and-break operations at a cycling rate of 6 cycles per minute maximum at the specified loads (see 3.1 and 6.1.2).

4.7.20 Salt spray (corrosion) (see 3.24). Switches and their mounting hardware and brackets (if applicable) shall be tested in accordance with method 101 of MIL-STD-202. The following details shall apply:

a. Test condition – B.
b. Measurements after exposure – Following the drying period, the switches shall meet the requirements specified in 3.24. Mounting hardware shall be removed at end of the test.

5. PACKAGING

5.1 Packaging. For acquisition purposes, the packaging requirements shall be as specified in the contract or order (see 6.2). When packaging of materiel is to be performed by DoD or in-house contractor personnel, these personnel need to contact the responsible packaging activity to ascertain packaging requirements. Packaging requirements are maintained by the Inventory Control Point's packaging activities within the Military Service or Defense Agency, or within the military service's system commands. Packaging data retrieval is available from the managing Military Department's or Defense Agency's automated packaging files, CD-ROM products, or by contacting the responsible packaging activity.

6. NOTES

6.1 Ordering data.

6.1.1 For category I switches. Procurement documents should specify the following:

a. Title, number, and date of this specification.
b. Title, number, and date of the applicable specification sheet and the complete military part number.

6.1.2 For category II switches. Procurement documents should specify the following:

a. Title, number, and date of this specification.
b. Title, number, and date of the applicable specification sheet.
c. Military part number of qualified switch.
d. Manufacturer’s part number of modified switch.
e. Details of the variations from the specification sheet.
f. Inspection requirements (to verify variations from category I switches) (see 4.5).
    1. Tests to be performed (if any) (see 4.5).
    2. The laboratory at which inspection is to be performed (see 4.5).
    3. Sample size and submission of data, if other than that specified (see 4.5.1 and 4.5.2).

6.2 Qualification. With respect to products requiring qualification, awards will be made only for products which are, at the time of award of contract, qualified for inclusion in Qualified Products List QPL No. 3950 whether or not such products have actually been so listed by that date. The attention of the contractors is called to these requirements, and manufacturers are urged to arrange to have the products that they propose to offer to the Federal Government tested for qualification in order that they may be eligible to be awarded contracts or orders for the products covered by this specification. Information pertaining to qualification of products may be obtained from via email to vqp.chief@dla.mil or from the DLA Land and Maritime, Attn: VQP, 3990 East Broad Street, Columbus, OH 43213-1199. An online listing of products qualified to this specification may be found in the Qualified Products Database (QPD) at https://assist.daps.dla.mil.

6.3 Tin whisker growth. The use of alloys with tin content greater than 97 percent, by mass, may exhibit tin whisker growth problems after manufacture. Tin whiskers may occur anytime from a day to years after manufacture and can develop under typical operating conditions, on products that use such materials. Conformal coatings applied over top of a whisker-prone surface will not prevent the formation of tin whiskers. Alloys of 3 percent lead, by mass, have shown to inhibit the growth of tin whiskers. For additional information on this matter, refer to ASTM-B545 (Standard Specification for Electrodeposited Coatings of Tin).

6.4 Environmentally preferable material. Environmentally preferable materials should be used to the maximum extent possible to meet the requirements of this specification. As of the dating of this document, the U.S. Environmental Protection Agency (EPA) is focusing efforts on reducing 31 priority chemicals. The list of chemicals and additional information is available on their website at http://www.epa.gov/osw/hazard/wastemin/priority.htm. Included in the EPA list of 31 priority chemicals are cadmium, lead, and mercury. Use of these materials should be minimized or eliminated unless needed to meet the requirements specified herein (see Section 3).

6.4 Subject term (key word) listing.
evaporate
fluid
high temperature
medium response time
proof temperature
sensor
vaporize

6.6 Changes from previous issue. The margins of this specification are marked with vertical lines to indicate where modifications from this revision were made. This was done as a convenience only and the Government assumes no liability whatsoever for any inaccuracies in these notations. Bidders and contractors are cautioned to evaluate the requirements of this document based on the entire content irrespective of the marginal notations.

Custodians:
Army - CR
Navy - EC
Air Force - 85
DLA – CC

Review activities:
Air Force – 99

Preparing activity:
DLA - CC

(Project 5930-2011-004)

NOTE: The activities listed above were interested in this document as of the date of this document. Since organizations and responsibilities can change, you should verify the currency of the information above using the ASSIST Online database at https://assist.daps.dla.mil/ .