INCH-POUND

MIL-DTL-28781E
22 August 2011
SUPERSEDING
MIL-DTL-28781D
25 August 2006

DETAIL SPECIFICATION

CABLE, ELECTRICAL, SPECIAL PURPOSE SHORE USE

This specification is approved for use by all
Departments and Agencies of the Department of Defense.

1. SCOPE

1.1 Scope. This specification describes twisted-pair, multiconductor, shielded cables for use within shore communication stations and facilities.

1.2 Classification. Cables will be of the following number of pairs, as specified in the solicitation or contract (see 6.2):

1 pair
3 pairs
6 pairs
16 pairs
26 pairs
52 pairs
104 pairs

2. APPLICABLE DOCUMENTS

2.1 General. The documents listed in this section are specified in sections 3, 4, or 5 of this specification. This section does not include documents cited in other sections of this specification or recommended for additional information or as examples. While every effort has been made to ensure the completeness of this list, document users are cautioned that they must meet all specified requirements of documents cited in sections 3, 4, or 5 of this specification, whether or not they are listed.

Comments, suggestions, or questions on this document should be addressed to DLA Land and Maritime, ATTN: VAI, P.O. Box 3990, Columbus, Ohio 43218-3990, or email to WireCable@dla.mil. Since contact information can change, you may want to verify the currency of this address information using the ASSIST Online database at https://assist.daps.dla.mil.

AMSC N/A FSC 6145

2.2 Government documents.

2.2.1 Specifications, standards, and handbooks. The following specifications, standards and handbooks form a part of this document to the extent specified herein. Unless otherwise specified, the issues of these documents are those cited in the solicitation or contract.

FEDERAL STANDARD

FED-STD-228	Cable and Wire, Insulated; Methods of Testing.

DEPARTMENT OF DEFENSE SPECIFICATIONS

MIL-DTL-16878	Wire, Electrical, Insulated, General Specification for.
MIL-DTL-16878/1	Wire, Electrical, Polyvinyl Chloride (PVC) Insulated, 105 ºC, 600 Volts (Not for Navy Shipboard Use).

(Copies of these documents are available online at https://assist.daps.dla.mil/quicksearch/ or from the Standardization Document Order Desk, 700 Robbins Avenue, Building 4D, Philadelphia, PA 19111-5094.)

2.3 Non-Government publications. The following documents form a part of this document to the extent specified herein. Unless otherwise specified, the issues of these documents are those cited in the in the solicitation or contract.

ASTM INTERNATIONAL

ASTM-B33	Wire, Tinned Soft or Annealed Copper, For Electrical Purposes.
ASTM-D470	Wire and Cable, Crosslinked Insulations and Jackets for.
ASTM-D2240	Rubber Property-Durometer Hardness.

(Copies of these documents are available online at http://www.astm.org or from the ASTM International, P.O. Box C700, 100 Barr Harbor Drive, West Conshohocken, PA 19428-2959.)

NATIONAL ELECTRICAL MANUFACTURERS ASSOCIATION (NEMA)

NEMA WC 70	Nonshielded Power Cables Rated 2000 Volts or Less for the Distribution of Electrical Energy.

(Copies of these documents are available online at http://www.nema.org or from the National Electrical Manufacturer's Association, 1300 North 17th Street, Suite 1752, Rosslyn VA 22209.)

X-RITE, INCORPORATED

Munsell Color Charts for Plastic Cable and Wire.

(Copies of these documents are available online at www.xrite.com or from X-Rite Corporate Headquarters USA, 4300 44th St. SE, Grand Rapids, MI 49512).

2.4 Order of precedence. Unless otherwise noted herein or in the contract, in the event of a conflict between the text of this document and the references cited herein (except for related specification sheets), the text of this document takes precedence. Nothing in this document, however, supersedes applicable laws and regulations unless a specific exemption has been obtained.

3. REQUIREMENTS

3.1. First article. When specified (see 6.2 and 6.3), a sample shall be subjected to first article inspection in accordance with 4.2.

3.2 Materials.

3.2.1 Conductors. The conductors shall utilize number 24 American Wire Gauge (AWG) (nominal diameter .0201 inch (.511 mm)), tinned solid copper wire, in accordance with ASTM-B33.

3.2.1.1 Joining conductors. Joints made in conductors may be brazed using a silver alloy solder and a non-acid flux, or welded. Joints shall be butted and shall be free from lumps and sharp projections. The tensile strength of any section of a conductor joint that was brazed or welded shall be not less than 85 percent of the tensile strength of an adjacent section without a joint.

3.2.1.2 Conductor resistance. The direct current (dc) resistance of each conductor shall not exceed 30 ohms per 1,000-foot (304.8-meter) length, when measured at, or corrected for, 68° F.

3.2.2 Insulation material. The insulation material shall be .010±.002-inch (.254±.051 mm) thick polyvinyl chloride, in accordance with MIL-DTL-16878 and MIL-DTL-16878/1, M16878/1BEA. A jacket of polyamide material .002±.001 inch (.508±.025 mm) thick shall be placed over the insulation. The outside diameter of the conductor, including insulation and polyamide material, is to be not greater than .0502 inch (1.275 mm) to permit application of commercially available cable connector devices.

3.2.2.1 Insulation defects. The insulation shall be smooth and free from holes, splits, blisters, and other imperfections.

3.2.2.2 Cold bend. The finished conductor insulation shall show no evidence of cracking or fracturing when cold bend tested in accordance with 4.6.4.

3.2.2.3 Color coding of insulation. The color coding shall be as shown in table I to identify each pair in the completed cable.

TABLE I. Color coding.

Pair number	Color	Pair number	Color
1	Blue and white (or natural)	27	Orange-white (stripe) and white (or natural)
2	Orange and white (or natural)	28	Green-white (stripe) and white (or natural)
3	Green and white (or natural)	29	Brown-white (stripe) and white (or natural)
4	Brown and white (or natural)	30	Slate-white (stripe) and white (or natural)
5	Slate and white (or natural)	31	Blue-white (stripe) and red
6	Blue and red	32	Orange-white (stripe) and red
7	Orange and red	33	Green-white (stripe) and red
8	Green and red	34	Brown-white (stripe) and red
9	Brown and red	35	Slate-white (stripe) and red
10	Slate and red	36	Blue-white (stripe) and black
11	Blue and black	37	Orange-white (stripe) and black
12	Orange and black	38	Green-white (stripe) and black
13	Green and black	39	Brown-white (stripe) and black
14	Brown and black	40	Slate-white (stripe) and black
15	Slate and black	41	Blue-white (stripe) and yellow
16	Blue and yellow	42	Orange-white (stripe) and yellow
17	Orange and yellow	43	Green-white (stripe) and yellow
18	Green and yellow	44	Brown-white (stripe) and yellow
19	Brown and yellow	45	Slate-white (stripe) and yellow
20	Slate and yellow	46 1/	Blue-white (stripe) and violet
21	Blue and violet	47	Orange-white (stripe) and violet
22	Orange and violet	48	Green-white (stripe) and violet
23	Green and violet	49	Brown-white (stripe) and violet
24	Brown and violet	50	Slate-white (stripe) and violet
25	Slate and violet	51	Red and white (or natural)
26	Blue-white (stripe) and White (or natural)	Spare 1/ (For 52 or 104 pair)	Red and Black

1/ At the manufacturer's option, pair number 46 and the spare pair may be used to assure the required number of (non-defective) pairs.

3.2.2.3.1 Color standards. The colored insulation shall match the centroid colors of table II, within the limits of standards for colors as specified in Munsell Color Charts for Plastic Cable and Wire. The color pigments shall be chosen to yield uniform dielectric constant between colors and shall have no deteriorating effects on the insulation.

TABLE II. Munsell centroid colors.

		Tolerance limits					
		Hue		Value		Chroma	
Color	Centroid	H-	H+	V-	V+	C-	C+
Red	2.5R 4/12	1.25R 4/12	3.75R 4/12	2.5R 3/12	2.5R 4.5/12	2.5R 4/10	None
Orange	2.5YR 6/14	1.25R 6/14	3.75YR 6/14	2.5YR 5/14	2.5YR 6.5/14	2.5YR 6/12	None
Brown	2.5YR 3.5/6	10R 3.5/6	5YR 3.5/6	2.5YR 3/6	2.5YR 4/6	2.5YR 3.5/4	2.5YR 3.5/7
Yellow	5Y 8.5/12	2.5Y 8.5/12	7.5Y 8.5/12	5Y 8/12	None	5Y 8.5/10	None
Green	2.5G 5/12	1.25 G5/12	3.75G 5/12	2.5G 4/10	2.5G 5.5/12	2.5G 5/9	None
Blue	2.5PB 4/10	10B 4/10	5PB 4/10	2.5PB 3.5/10	2.5PB 4.5/10	2.5PB 4/9	None
Violet	2.5P 4/10	1.25P 4/10	3.75P 4/10	2.5P 3/10	2.5P 4.5/10	2.5 4/8	None
Neutral colors							
White	N 9/	Value tolerances: V- is N 8.75; no V+ limit. Chromaticity tolerances: 5R 9/1 5G 9/.5 5YR 9/1 5B 9/.5 5Y 9/1 5P 9/.5					
Slate	N 5/	Value tolerances: V- is N 4.5/; V+ is N 5.5/ Chromaticity tolerances: 5R 5/.5 5B 5/.5 5Y 5/.5 5P 5/.5 5G 5/.5					
Black	N 2/	Value tolerances: No V- limit; V+ is N 2.3 Chromaticity tolerances: 5R 2/.5 5B 2/.5 5Y 2/.5 5P 2/.5 5G 2/.5					

3.2.2.3.2 Insulation stripes. Striping shall be such as to provide readily discernible stripes on the conductor insulation. These stripes may be integral of the insulation or the striping may be provided as an internal plastic coating. Striping shall firmly adhere to the insulation and remain intact through the life of the conductor insulation. Insulation striping in accordance with method 1 of NEMA WC 70 is acceptable.

3.2.2.4 Twisting of pairs. The insulated conductors shall be twisted into pairs. The average length of pair twists in any pair in the finished cable, when measured on any 10-foot (3.05 m) length, shall not exceed 6 inches (152.4 mm).

3.2.2.4.1 Crosstalk loss. The root mean square (rms) output-to-output far-end crosstalk loss, as measured on the completed cable at a test frequency of 150-kilohertz (kHz), shall not be less than 70 dB per 1,000 feet (304.8 m).

3.2.2.5 Heat resistance. The insulation shall exhibit no cracking or delamination and no readily visible defects in any of the wire components after being subjected to the heat conditions of MIL-DTL-16878/1.

3.2.2.6 Shrinkage. When subjected to contact with molten solder, the insulation shall not flare away from the conductor, open up over the bent portion called for in the test, nor shrink back more than .125 inch. (3.18 mm)

3.2.3 Cable forming. The twisted pairs shall be assembled to form a substantially cylindrical core. Adjacent layers may be stranded in the same direction or in opposite directions. For a 104-pair cable, the cable shall be formed in two 52-pair concentric units or four 26-pair units.

3.2.3.1 Binder. A colored binder shall be applied around the units for separation. The colors shall be readily recognizable. Bindings shall be applied with a lay of not more than 4 inches. The binder may be either a non-hygroscopic thread or tape.

3.2.3.2 Binder colors. The colors for each unit binder shall be as follows:

Unit	Color of binding
1	Blue-White
2	Orange-White
3	Green-White
4	Brown-White
5	Slate-White

3.2.4 Core covering. The core covering shall be completely covered with Mylar® (Mylar is a registered trademark of E.I. Dupont Co.), polyethylene, or Mylar backed SBR (Styrene-Butadiene Rubber) or equivalent, which shall be non-hygroscopic and shall be applied with an overlap. The core covering shall provide a sufficient heat barrier to prevent visible evidence of conductor insulation deformation or adhesion between conductors caused by adverse heat transfer during the jacketing operation.

3.2.4.1 Dielectric strength. In each length of completed cable, the insulation between conductors, and between conductors and shield, shall withstand the dielectric dc potential for 3 seconds as follows:

	dc volts
Between conductors	3,600
Between conductors and shield	1,800

3.2.5 Shield. An overall tinned copper braid shield shall be applied over the core-covering. The shield shall cover 90 percent of the cable core.

3.2.5.1 Shield resistance. The dc resistance of the shield for a 1000-foot (304.8-meter) length of completed cable shall not exceed the values shown below:

No. of pairs	dc resistance
1	5.75 ohms
3	4.00 ohms
6	3.50 ohms
26	2.10 ohms

3.2.6 Jacket material. The jacket material shall be black colored polyvinyl chloride containing a minimum of 1 percent of carbon black, or similar material, to resist ultraviolet light. The jacket material shall conform to the physical (finished cable) requirements outlined in 3.2.6.1 through 3.2.6.4. The cable jacket shall have a type A durometer hardness of 80±5.

3.2.6.1 Tensile strength. The cable jacket shall have a minimum tensile strength of 2000 pounds per square inch (psi).

3.2.6.2 Elongation. The cable jacket shall have a minimum elongation of 250 percent.

3.2.6.3 Jacket thickness and outside cable diameter. The jacket thickness and outside cable diameter shall be as specified in table III. The minimum spot thickness of the jacket shall not be less than 70 percent of the specified thickness. The average thickness at any cross-section of the jacket material shall be not less than 90 percent of the specified thickness.

TABLE III. Jacket thickness and outside diameter (OD).

No. of pairs	Nominal jacket thickness		Approx. OD	
	inches	millimeters	inches	millimeters
1	.050	1.270	.227	5.765
3	.050	1.270	.315	8.001
6	.050	1.270	.388	9.855
16	.062	1.5748	.506	12.852
26	.062	1.5748	.615	15.621
52	.062	1.5748	.781	19.837
104	.070	1.778	1.137	28.900

3.2.6.4 Cold bend for jacket material. A sample of the finished cable shall show no evidence of cracking or fracturing.

3.2.7 Cable marking. A tape shall be permanently marked and inserted between the jacket and shield. The length shall be marked every 12 inches (304.8 mm). The tape shall be marked at least every 24 inches (609.6 mm) with the following:

a. Manufacturer's name (or symbol designation).

b. Date of manufacture.

c. Contract number.

d. Specification number.

3.3 Electrical requirements.

3.3.1 Mutual capacitance. The average mutual capacitance of all pairs in a completed reel of cable of three or more pairs shall not exceed .152 microfarad (μF) per 1 mile (1.609 kilometers). The average mutual capacitance of all pairs also shall not exceed .160 μF per 1 mile for cables of less than three pairs. The mutual capacitance test shall be performed in accordance with 4.6.2. NOTE: The objective is the lowest practical average mutual capacitance with all individual pair mutual capacitances as close as practical to the average value for the reel.

3.3.2 Capacitance unbalance.

3.3.2.1 Pair-to-pair capacitance unbalance. The pair-to-pair capacitance unbalance for a 1000-foot (304.8-meter) length of completed cable measured at 1,000±100 Hz shall not exceed the following:

Less than 16 pairs	100 picofarads (pF) max individual
16 or more pairs	40 pF rms

For lengths of cable other than 1,000 feet (304.8 meters), the value shall be converted to 1000-feet (304.8 meter) values by dividing the unbalance of the length measured by the square root of the ratio of the length measured to 1,000 feet. In cables with 52 pairs and less and in each group of multigroup cables, the unbalances to be considered shall be:

a. Between pairs adjacent in a layer.

b. Between pairs in centers of four pairs or less.

c. Between pairs in adjacent layers, when the number of pairs in the inner (smaller) layer is six or less. In this, the center is counted as a layer.

3.3.2.2 Pair-to-shield capacitance unbalance. The pair-to-shield direct capacitance unbalance for a 1,000-foot (304.8-meter) length of completed cable, when measured at 1,000±100 Hz, shall conform to the following: (a) The conductor-to-shield capacitances of the two conductors of the pair under test shall balance within 6 percent of the value of the lowest conductor-to-shield capacitance of the pair; and (b) the maximum deviation of any pair difference shall not exceed the average of the differences of all pairs of the cable by more than 500 pF. NOTE: “Pair difference” is the difference between the conductor-to-shield capacitances of the two conductors of the pair.

3.3.3 Continuity. In each length of cable, the conductors shall be free from grounds (contacts between a conductor and shield), short circuits, and open circuits. The shielding shall be free from open circuits.

3.4 Cable put-up. Cable shall be put-up on reels in lengths-per-reel as specified in the solicitation (see 6.2).

3.5 Recycled, recovered, or environmentally preferable materials. Recycled, recovered, or environmentally preferable materials should be used to the maximum extent possible provided that the material meets or exceeds the operational and maintenance requirements, and promotes economically advantageous life cycle costs.

3.6 Workmanship. The cable shall be free of kinks, abrasions, and cracked or peeled surfaces. The cable shall be a uniform and consistent product and shall be free from defects that adversely affect the serviceability of the product.

4. VERIFICATION

4.1 Classification of inspection. The inspection requirements specified herein are classified as follows:

a. First article inspection (see 4.2).

b. Conformance inspection (see 4.5).

4.2 First article inspection. First article inspection shall be performed on 500 feet (152.4 meters) of cable specified in the solicitation or contract (see 6.2). Certification of compliance for the basic materials may be obtained from the supplier of the material, providing that such certification contains actual test, examination, or other verifiable data (see 6.3).

4.2.1 Test methods. The first article samples shall be subjected to the tests listed in table IV. No failures will be permitted.

TABLE IV. First article inspection.

Examination and test	Requirement paragraph	Test method paragraph
Visual and dimensional	3.2.1, 3.2.1.1, 3.2.2, 3.2.2.1, 3.2.2.3, 3.2.2.3.1, 3.2.2.3.2, 3.2.2.4, 3.2.3, 3.2.3.1, 3.2.3.2, 3.2.4, 3.2.5, 3.2.6, 3.2.6.3, 3.2.7, 3.4	4.6.1
Continuity	3.3.3	4.6.11
Conductor resistance	3.2.1.2	4.6.7
Mutual capacitance	3.3.1	4.6.2
Capacitance unbalance	3.3.2	4.6.3
Insulation:		
Material	3.2.2	4.6.1
Defects	3.2.2.1	4.6.1
Cold bend	3.2.2.2	4.6.4
Tensile strength and elongation	3.2.2	4.6.5
Striping (if applicable)	3.2.2.3.2	4.6.1
Color coding	3.2.2.3	4.6.1
Color standards	3.2.2.3.1	4.6.1
Heat resistance	3.2.2.5	4.6.12
Shrinkage	3.2.2.6	4.6.12
Twisting of pairs	3.2.2.4	4.6.1
Binder thread or tapes	3.2.3.1, 3.2.3.2	4.6.1
Core covering	3.2.4	4.6.1
Crosstalk	3.2.2.4.1	4.6.9
Shield:		
Resistance	3.2.5.1	4.6.7
Jacket:		
Hardness	3.2.6	4.6.10
Cold bend	3.2.6.4	4.6.4
Tensile strength	3.2.6.1	4.6.5
Elongation	3.2.6.2	4.6.5
Dielectric strength	3.2.4.1	4.6.6

4.3. Government verification. All inspections performed by the supplier will be subject to Government verification at any time. Verification will consist of the following:

a. Surveillance of the operations to determine that practice, methods, and procedures of the written inspection system are being properly applied.

b. Government product inspection to measure contract parameters of a product to be offered for acceptance.

c. Government inspection of delivered items to assure compliance with this specification and as specified in the contract or order.

4.4 Requirements cross-reference matrix. Table V provides a cross-reference matrix of the section 3 requirements tested or verified below.

TABLE V. Requirements cross-reference matrix.

Requirement	Verification	Requirement	Verification
3.1.1	4.2	3.2.3.2	4.6.1
3.2	4.6.1	3.2.4	4.6.1
3.2.1	4.6.1	3.2.4.1	4.6.6
3.2.1.1	4.6.1, 4.6.8	3.2.5	4.6.1
3.2.1.2	4.6.7	3.2.5.1	4.6.7
3.2.2.1	4.6.1	3.2.6	4.2, 4.6.10
3.2.2.2	4.6.4	3.2.6.1	4.6.5
3.2.2.3	4.6.1	3.2.6.2	4.6.5
3.2.2.3.1	4.5.2.3, 4.6.1	3.2.6.3	4.6.1
3.2.2.3.2	4.6.1	3.2.6.4	4.6.4, 4.6.4.1, 4.6.4.2
3.2.2.4	4.6.1	3.2.7	4.6.1
3.2.2.4.1	4.6.9	3.3.1	4.6.2
3.2.2.5	4.6.12		4.6.3.1
3.2.2.6	4.6.12	3.3.2.2	4.6.3.2
3.2.3	4.6.1	3.3.3	4.6.11
3.2.3.1	4.6.1	3.4	4.6.1

4.5 Conformance inspection.

4.5.1 Inspection lot. Cable of the same size (number of pairs) and color coding, offered for delivery at one time, shall be considered a lot for purposes of sampling and inspection.

4.5.2 Group A inspection. The group A inspection shall consist of the tests shown in table VI.

TABLE VI. Group A inspection.

Examination and tests	Requirement paragraph	Test method paragraph
Visual and dimensional	3.2.1, 3.2.2, 3.2.1.1, 3.2.2.1, 3.2.2.3, 3.2.2.4, 3.2.3, 3.2.3.1, 3.2.4, 3.2.5, 3.2.3.2	4.6.1
Continuity	3.3.3	4.6.11
Jacket thickness and OD	3.2.6.3	4.6.1
Insulation defects	3.2.2.1	4.6.1
Insulation striping	3.2.2.3.2	4.6.1
Insulation colors: Pre-mixed (mixed in plant)	3.2.2.3.1	4.3
Mixed (Mixed by material manufacturer)	3.2.2.3.1	4.3
Dielectric	3.2.4.1	4.6.6

4.5.2.1 Sampling for visual and dimensional examination. Each reel shipping length shall be examined to verify conformance to 4.6.1 and the requirements in table VI. The number of pairs to be examined shall be as follows:

Pairs in the cable	Pairs to be examined
1	1
3	2
6	3
16	5
26	8
52	13
104	20

Any defect in a sample shall cause rejection of the shipping length. In the event that a defect or error is found at any inspected end, the other end of that length shall be examined for the same defect. The reel that contains the adjacent section of cable shall also be examined for the same defect.

4.5.2.2 Sampling for insulation and continuity tests. In each shipping length of cable, tests shall be performed on the number of pairs specified in 4.5.2.1. Each of the selected pairs shall be subjected to all of the tests necessary to verify conformance to 3.2.2, 3.2.2.1 and 3.3.3, respectively. If any pair fails in any test, the entire length of cable shall not be offered for delivery. The same pair on the adjacent reels shall be subjected to the same test in which the failure occurred.

4.5.2.3 Sampling for measurement of colors. In each shipping length of cable, pairs shall be selected at random for verification of the color in accordance with 3.2.2.3 by comparison with Munsell color cards. The number of pairs so examined shall be the same as specified in 4.5.2.1. If any pair is found not having color as specified, every pair in that cable length shall be compared with the Munsell color card. Also, the reels of cable preceding and following shall be examined to determine the extent of the incorrect coloring. If the colored insulation does not conform to the requirements of 3.2.2.3, the lot shall not be offered for delivery.

4.5.3 Group B inspection. The group B inspection shall consist of tests shown in table VII.

TABLE VII. Group B inspection.

Examination and tests	Requirement paragraph	Test method paragraph
Mutual capacitance	3.3.1	4.6.2
Capacitance unbalance	3.3.2	4.6.3
Conductor resistance	3.2.1.2	4.6.7
Shield resistance	3.2.5.1	4.6.7
Crosstalk	3.2.2.4.1	4.6.9

4.5.3.1 Sampling for group B tests. The sample size (number of reels) of each lot of prepared cable to be tested under group B tests listed in table VII shall be in accordance with the sample sizes stated in table VIII for the cable construction (number of pairs) involved. If one or more defects are found in the inspection sample, then the production lot shall be inspected for that particular defect and the defects removed. A second inspection sample shall be selected from the production lot and all sampling tests again performed. If one or more defective items are found in the second inspection sample, the production lot shall be rejected and shall not be supplied to this specification.

TABLE VIII. Sample sizes.

Number of pairs in assembled cable	Sample size
1	1
3	2
6	2
16	5
26	5
52	5
104	5

Any test failures in any sample reel for any test listed in table VII of this specification shall be cause for rejection of the entire lot of the cable size represented by the sample reel under test on the basis of the parameters being tested.

4.5.4 Rejected lots. If any inspection lot is rejected, the supplier may replace it with a new lot, rework it to correct the defects, or screen out the defective units, and reinspect the lot. Such lots shall be inspected in table IX. Reinspected lots shall be kept separate from new lots and shall be clearly identified as reinspected lots.

TABLE IX. Reinspected lots.

Number of pairs in assembled cable	Sample	Sample size
1	First Second	1 1
3	First Second	2 2
6	First Second	2 2
16	First Second	3 3
26	First Second	3 3
52	First Second	3 3

4.6 Methods of inspection.

4.6.1 Visual and dimensional examination. Finished wire shall be examined to determine that the materials, physical dimensions, construction, splices, marking, and workmanship conform to the applicable requirements. The color coding, shielding, core covering, binder marking, pair twist rate, cable forming, and jacket thickness shall be examined at the ends of the shipping length of cable on the reel. The cable shall be examined for jacket imperfections on all of the surface which is visible without unwinding the cable from the reel.

4.6.2 Mutual capacitance test. The mutual capacitance test shall be performed on the cable shipping length in place on the reel. Mutual capacitance is the effective capacitance between the two wires of a pair. Mutual capacitance may be measured on individual pairs, or the average mutual capacitance may be on a number of pairs in groups. The mutual capacitance shall be measured by using a suitable capacitance or impedance bridge with a test frequency of 1,000±100 Hz. Where group measurements of mutual capacitance are performed with cables exceeding 26 pairs in size, these measurements should be made on individual groups rather than on all pairs of the cable grouped together for a single average measurement. In any reel of 12 pairs or more, the rms deviation of mutual capacitance of all the pairs tested from the average mutual capacitance of that reel shall not exceed four percent.

4.6.3 Capacitance unbalance test. The capacitance unbalance test shall be performed on the cable shipping length in place on the reel.

4.6.3.1 Pair-to-pair capacitance unbalance. The capacitance involved and test methods are shown on figure 1. One and two represent the two conductors of a pair. Three and four represent the two conductors of a second pair. The capacitances, namely C_{13}, C_{14}, C_{23}, C_{24}, C_{12}, and C_{34} are the direct capacitances between conductors.

The capacitances C_{1g}, C_{2g}, C_{3g}, and C_{4g} are the direct capacitances between wires 1 through 4, respectively, and all other conductors in the cable connected to the shield and ground. The pair-to-pair capacitance unbalance is: $(C_{14} + C_{23}) - (C_{13} + C_{24})$

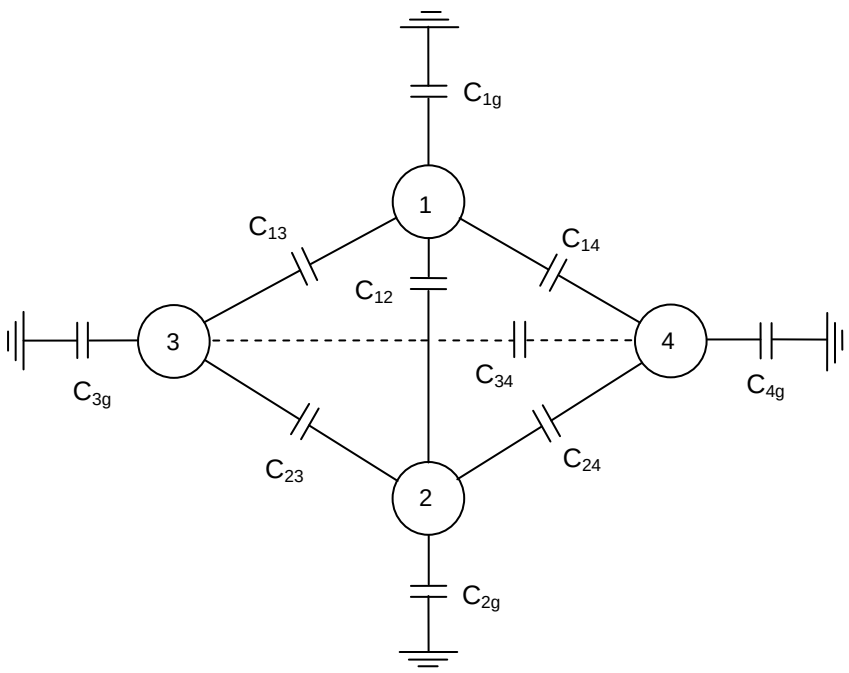

FIGURE 1. Test method for determining capacitance unbalance of pair-to-pair.

4.6.3.2 Pair-to-shield capacitance unbalance. On figure 2, S indicates all wires (except conductors 1 and 2) bunched together. Wires 1 and 2 have a direct capacitance between them as well as a direct capacitance to the shield. Wires 1 and 2 also have direct capacitance to S, and S has a direct capacitance to the shield.

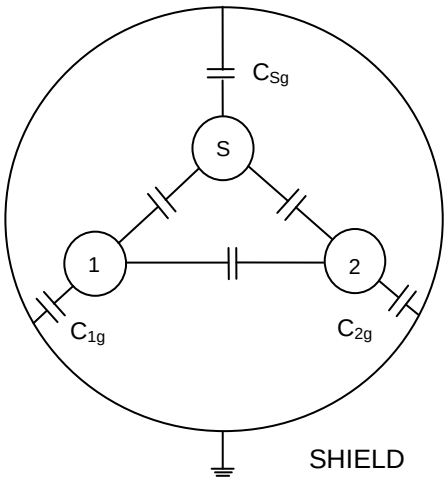

FIGURE 2. Test method for determining capacitance unbalance of pair-to-shield.

The pair-to-shield direct capacitance unbalance for pair 1-2 is $C_{1g} – C_{2g}$. The measurement of this difference shall be made in such a way that the measured value is not appreciably affected by the direct capacitances of wires 1 and 2 to other wires. A schematic of a form of measuring bridge often used to measure $C_{1g} – C_{2g}$ at 1,000 Hz, is shown on figure 3.

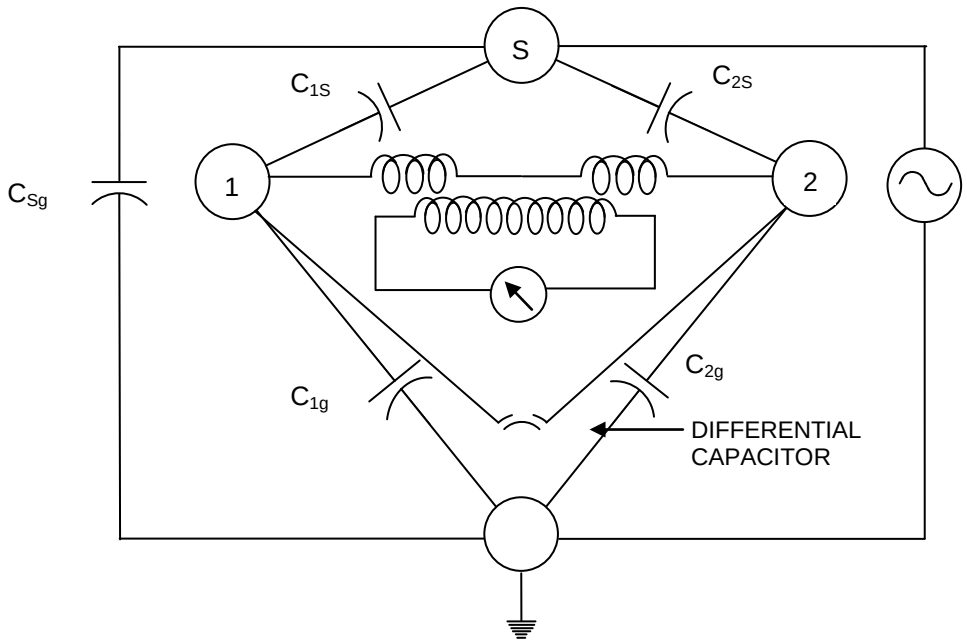

FIGURE 3. Test method for determining capacitance unbalance of pair-to-shield.

S indicates all wires (except conductors 1 and 2) bunched together. If a group or subgroup is always separated from the shield (by other groups or subgroups) the wires of a pair in the separated group have very small direct capacitances to the shield and their difference is negligible.

4.6.4 Cold bend test. The cold bend test for the insulation material and jacket material shall be performed as specified in 4.6.4.1 and 4.6.4.2.

4.6.4.1 Specimens. For cables with an overall diameter of less than .5 inch (12.70 millimeters), the test specified in 4.6.4.2 shall be conducted on three specimens of cable; the length of each specimen shall be at least 150 times the diameter. For cable of .5 inch (12.70 millimeters) and greater nominal diameter, the test specified in 4.6.4.2 shall be conducted on two specimens of cable. The length of each specimen shall be at least 120 times the diameter of the cable.

4.6.4.2 Procedure. One end of the test specimen shall be clamped circumferentially at two points, approximately 45 degrees apart, to a mandrel whose diameter is 10 times that of the test specimen. The specimen shall then be conditioned for 20 hours at -40±4 °F (-40±2 ºC) except for cable .250 inch (6.35 mm) overall nominal diameter and smaller, which shall be conditioned for 20 hours at -58±4 °F (-50±2 ºC). During this conditioning period, the specimens shall be kept reasonably straight. After this conditioning, but while the specimens are still in the cold chamber at the conditioning temperature, the specimens shall be wrapped for three close turns (two close turns for cables having a diameter .5 inch (12.70 mm) and greater) around the mandrel. This shall be done at a uniform rate of 15±3 revolutions per minute, preferably by means of an electrically driven motor. The cable shall be guided by a free moving sheave or transversing device, in intimate contact with the cable at the initial point of bend. The cable shall be removed from the cold chamber and shall satisfactorily meet the dielectric withstanding voltage requirement of 3.2.4.1. The cable shall be visually examined for evidence of cracks or flaws in the insulation material or jacket.

4.6.5 Tensile strength and elongation test. Samples of the conductor insulation or the jacket material, removed from the finished cable or conductor, shall be tested in accordance with standard ASTM-D470 for the conductor insulation and jacket. The tensile strength of the cable jacket shall be

tested in accordance with FED-STD-228, method 3021, or ASTM-D470. The cable jacket elongation shall be tested in accordance with FED-STD-228, method 3031, or ASTM-D470.

4.6.6 Dielectric test. The cable shall be subjected to the dielectric test as specified in method 6111 of FED-STD-228.

4.6.7 Resistance test. The resistance of the conductors and shield shall be measured as specified in method 6031 of FED-STD-228.

4.6.8 Joining conductors test. The tensile strength of any section of a conductor joint that was brazed or welded shall be tested to determine conformance to 3.2.1.1.

4.6.9 Crosstalk loss test. The rms crosstalk loss calculation shall be based on the combined total of all adjacent and alternate pair combinations within the same layer and center-to-first layer pair combinations. The rms crosstalk loss is the number of dB corresponding to the rms crosstalk voltage ratio. If the crosstalk loss is K_o dB at a frequency of f_o for a length L_o, it can be determined for any other length L or frequency f by:

$$K_{\frac{f}{L}}\text{loss} = K_o - 20\log_{10}\frac{f}{f_o} - 10\log_{10}\frac{L}{L_o}$$

4.6.10 Jacket hardness test. Samples of the conductor jacket shall be tested for hardness in accordance with ASTM-D2240.

4.6.11 Continuity test. Test continuity of all conductors with a low dc voltage and an appropriate indicating meter. Using a minimum test voltage of 100 V dc, test each conductor individually to verify that each conductor is free of any contact with the shield or any of the other conductors that may be bunched together.

4.6.12 Heat resistance and solder shrinkage. Heat resistance and solder shrinkage tests of MIL-DTL-16878 shall be performed on the finished insulated conductor.

5. PACKAGING

5.1 Packaging. For acquisition purposes, the packaging requirements shall be as specified in the contract or order (see 6.2). When packaging of materiel is to be performed by DoD or in-house contractor personnel, these personnel need to contact the responsible packaging activity to ascertain packaging requirements. Packaging requirements are maintained by the Inventory Control Point's packaging activities within the Military Service or Defense Agency, or within the military service's system commands. Packaging data retrieval is available from the managing Military Department's or Defense Agency's automated packaging files, CD-ROM products, or by contacting the responsible packaging activity.

6. NOTES

(This section contains information of a general or explanatory nature that may be helpful, but is not mandatory.)

6.1 Intended use. The cable described in this specification is intended for use in shore stations and facilities.

6.2 Acquisition requirements. Acquisition documents should specify the following:

a. Title, number, and date of the specification.

b. Number of pairs in cable (see 1.2).

c. If required, the specific issue of individual documents referenced (see 2.2.1 and 2.3).

d. If a first article inspection should not be performed (see 3.1.1).

e. Length of first article samples, if other than as specified in 4.2.

f. Number of feet of cable required on each reel (see 3.4 and 6.5.1).

g. Packaging, packing, and marking requirements other than those required by 5.1 and 6.5.

6.3 First article. Invitations for bids should provide that the Government reserves the right to waive the requirement for first article samples for those bidders offering a product which has been previously acquired or tested by the Government. Also, bidders offering such products who wish to rely on such production or test must furnish evidence with the bid that prior Government approval is presently appropriate for the pending procurement (see 4.4).

6.3.1 Size of cable. The invitations for bids should specify the size (number of pairs) of cable to be tested under first article test requirements. (If all constructions are acquired, the 26-pair construction should normally be specified.)

6.4 Packaging. MIL-DTL-12000 has been used in the past to specify requirements for the preservation, packing, unitization, and marking of cable, cord, and wire for storage and domestic and overseas shipments.

6.4.1 Reels. Cables should be furnished on non-returnable reels which should contain lengths as specified in 6.2. The cable lengths should have both ends brought out so that cable can be readily tested without unreeling. The reels should be constructed with flanges of sufficient thickness to protect the cable from damage during handling, shipment, and storage. The diameter of the reel core should be not less than 20 times the diameter of the cable.

6.4.2 Marking. In the past, both flanges of each reel have been marked in accordance with MIL-STD-129 with the following information:

a. Reel number

b. Number of pairs in cable

c. Length and location of each piece in feet for reels of multi-lengths

Where practicable, metal tags, stencil, or paper labels containing the information specified above should be securely attached to the reels. Where paper labels are used, they should be securely attached and protected by a transparent compound to prevent deterioration of the markings.

6.5 Subject term (key word) listing.

Capacitance unbalance
Crosstalk loss
Heat resistance
Munsell color
Multiconductor
Mutual capacitance
Polyamide
Polyethylene
Polyvinyl chloride
Shielded cables
Communication

6.6 Environmentally preferable material. Environmentally preferable materials should be used to the maximum extent possible to meet the requirements of this specification. As of the dating of this document, the U.S. Environmental Protection Agency (EPA) is focusing efforts on reducing 31 priority chemicals. The list of chemicals and additional information is available on their website at http://www.epa.gov/osw/hazard/wastemin/priority.htm. Included in the list of 31 priority chemicals are cadmium, lead, and mercury. Use of these materials should be minimized or eliminated unless needed to meet the requirements specified herein (see section 3).

6.7 Changes from previous issue. Marginal notations are not used in this revision to identify changes with respect to the previous issue due to the extensiveness of the changes.

CONCLUDING MATERIAL

Custodians:
Army - AV
Navy - EC
DLA - CC

Preparing activity:
DLA - CC

(Project 6145-2011-017)

NOTE: The activities listed above were interested in this document as of the date of this document. Since organization and responsibilities can change, please verify the currency of the information above using the ASSIST Online database at https://assist.daps.dla.mil.