INCH-POUND

MIL-DTL-28748/7F
w/AMENDMENT 3
8 August 2012
SUPERSEDING
w/AMENDMENT 2
18 July 2011

DETAIL SPECIFICATION SHEET

CONNECTORS, ELECTRICAL, RECTANGULAR, RACK AND PANEL, SOLDER TYPE PIN CONTACTS, SIZE 22

This specification is approved for use by all Departments and Agencies of the Department of Defense.

The requirements for acquiring the product described herein shall consist of this specification sheet and MIL-DTL-28748.

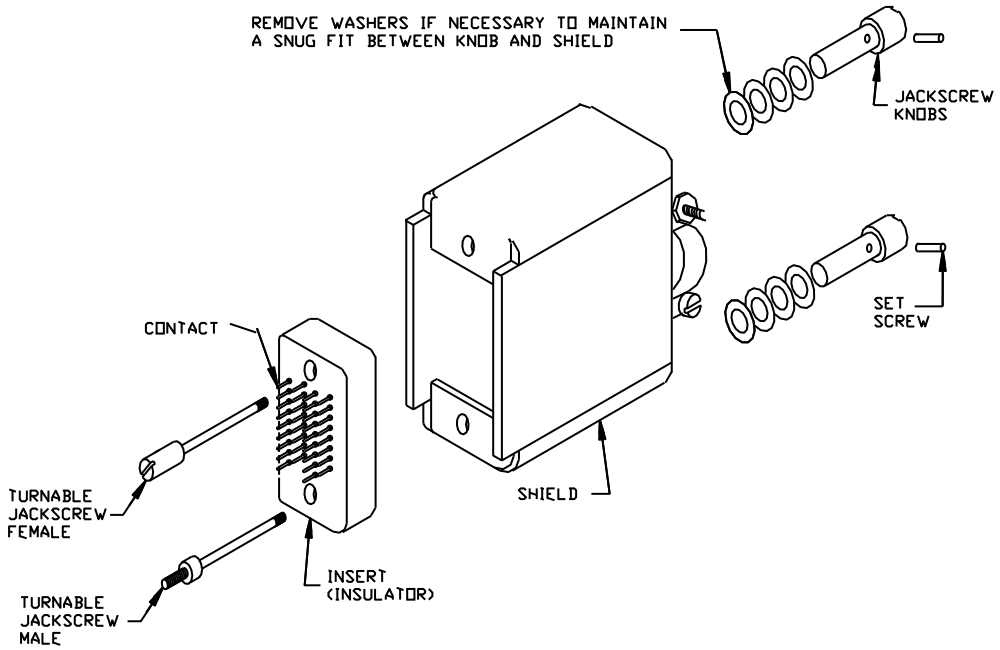

Connector

Configuration A

FIGURE 1. Connector with shields, jackscrews, and guidepins.

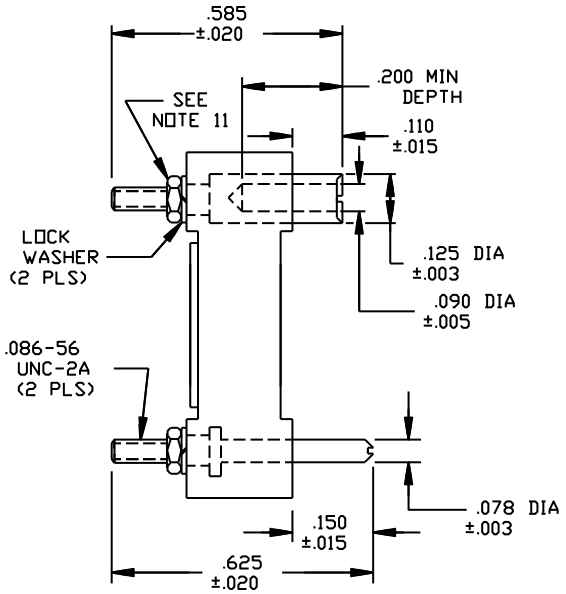

CONNECTOR WITH GUIDEPINS

CONFIGURATION B

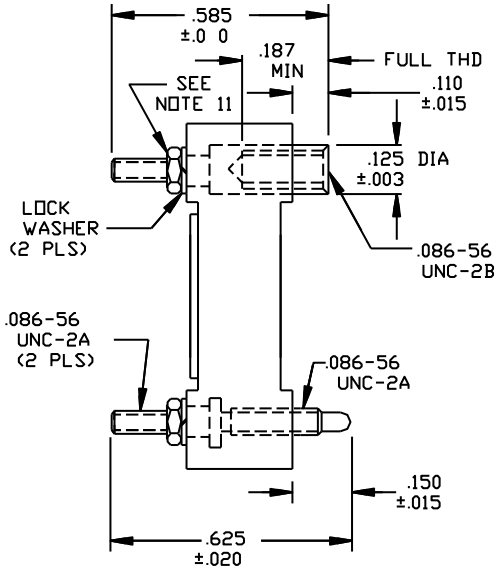

CONNECTOR WITH FIXED JACKSCREWS

CONFIGURATION C

FIGURE 1. Connector with shields, jackscrews, and guidepins – Continued.

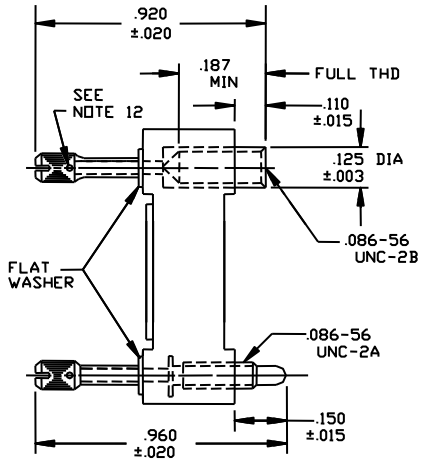

CONNECTOR WITH SHORT TURNABLE JACKSCREWS

CONFIGURATION D

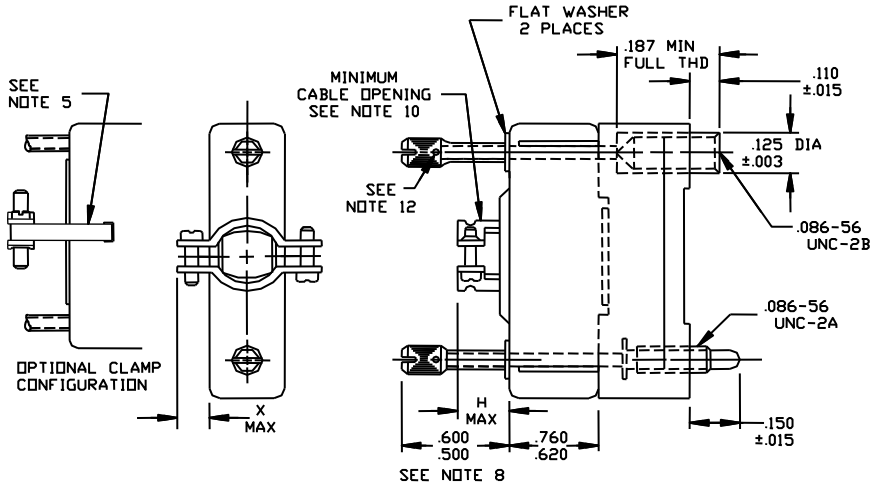

CONNECTOR WITH LONG TURNABLE JACKSCREWS AND SHIELD

CONFIGURATION E

Contact position	X max	H max
4	.210	.300
7	.210	.300
14	.210	.350
20	.210	.350
26	.150	.400
34	.100	.400
44	.100	.500
50	.100	.500

FIGURE 1. Connector with shields, jackscrews, and guidepins – Continued.

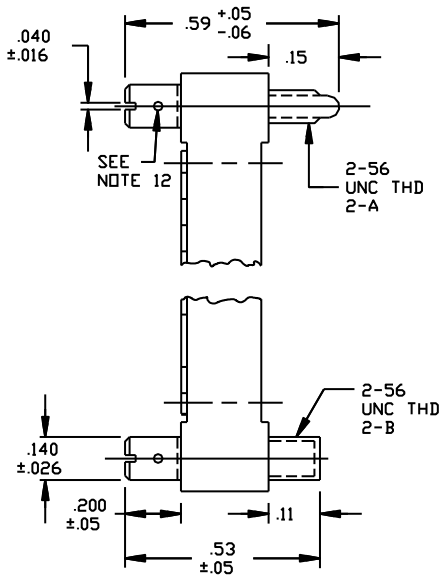

CONNECTOR WITH MINIATURE SLOTTED TURNTABLE JACKSCREWS
CONFIGURATION F

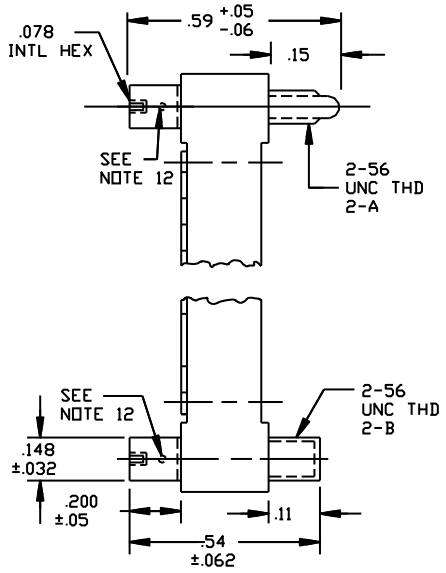

CONNECTOR WITH MINIATURE HEXHEAD TURNTABLE JACKSCREWS
CONFIGURATION G

FIGURE 1. Connector with shields, jackscrews, and guidepins – Continued.

Inches	mm	Inches	mm	Inches	mm
.003	0.08	.110	2.79	.600	15.24
.015	0.38	.125	3.18	.620	15.75
.016	0.41	.140	3.56	.625	15.88
.020	0.51	.148	3.76	.760	19.30
.026	0.66	.150	3.81	.960	24.38
.032	0.81	.187	4.75		
.040	1.02	.200	5.08		
.05	1.30	.500	12.70		
.06	1.52	.53	13.5		
.062	1.57	.54	13.72		
.078	1.98	.585	14.86		
.090	2.29	.59	15.0		

NOTES:

1. Dimensions are in inches.
2. Metric equivalents are given for information only.
3. Unless otherwise specified, tolerances are ± .02 inch (0.5 mm) for two place decimals and ± .015 inch (0.38 mm) for three place decimals.
4. Dimensions and configuration has optional mounting method.
5. Cable clamp configuration has optional mounting method.
6. Materials for jackscrews and guidepins: Corrosion resistance steel in accordance with ASTM A276 or ASTM A582/A582M, class 302, 303, 3038E, 304, 316, or 420 except knobs, washers, and spacers shall be either aluminum alloy or corrosion resistance steel. Finish for washers and spacers shall be passivated or anodized.
7. No side clamp available with insert arrangements A, B, D, E, and F.
8. .730 inch (18.54 mm) maximum for 14-contact connector with side opening shield.
   .630 inch (16.00 mm) maximum for 50-contact connector.
9. 1.200 inch (30.48 mm) maximum for 44-contact arrangement.
   1.520 inch (38.61 mm) maximum for 50-contact arrangement.
10.

Number of contacts	Minimum cable opening
4	.027 (0.69 mm) in
7	.027 (0.69 mm) in
14	.070 (1.78 mm) in
20	.081 (2.06 mm) in
26	.089 (2.26 mm) in
34	.110 (2.79 mm) in
44	.160 (4.06 mm) in
50	.170 (4.32 mm) in

11. Flat washers are required between lockwashers and insert material.
12. For jackscrew assemblies (excluding one piece constructions) setscrew, groove or roll pin shall be used. Setscrew requires a torque of 2 inch-pound minimum. No parts of the connector assembly shall be permanently displaced from their original, normal, fitted position at the completion of the specified tests.

FIGURE 1. Connector with shields, jackscrews, and guidepins – Continued.

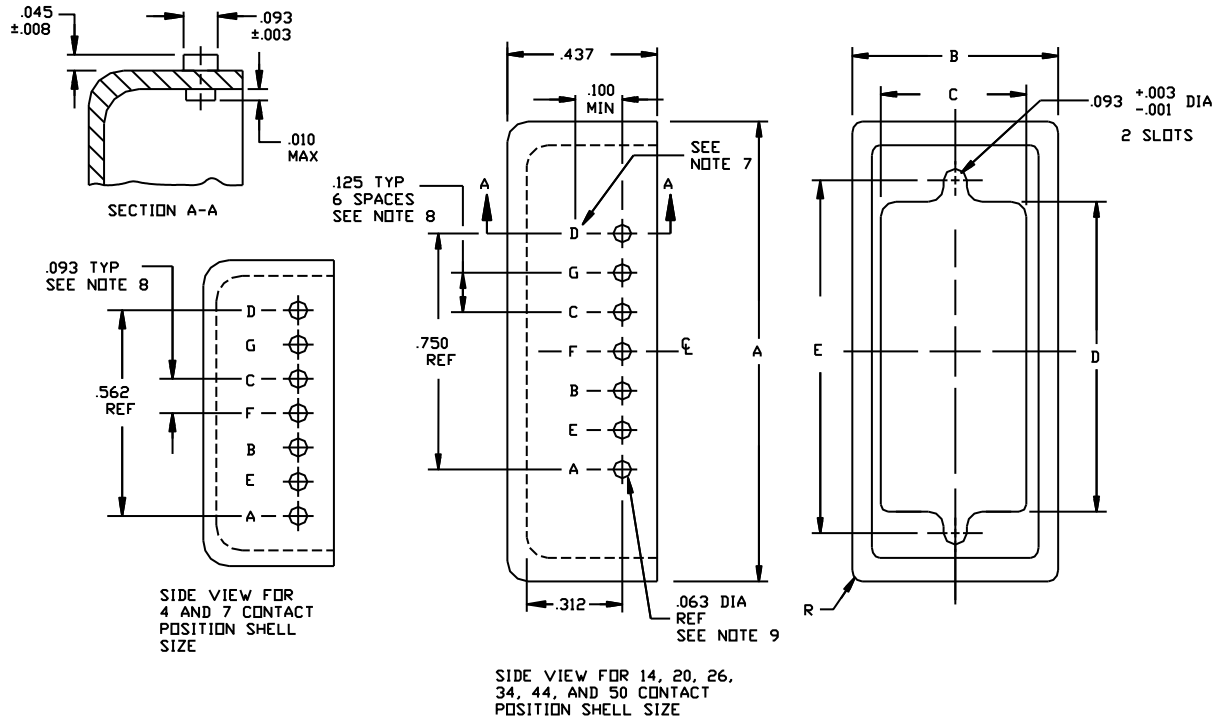

Insert designator	Connector size (number of contacts)	A max	B max	C min	D min	E ± .005 (0.13)	R
N	4	.870 (22.10)	.300 (7.62)	.230 (5.84)	.430 (10.92)	.562 (14.27)	.031 (0.79)
P	7	.870 (22.10)	.300 (7.62)	.230 (5.84)	.430 (10.92)	.562 (14.27)	.031 (0.79)
Q	14	.970 (24.64)	.370 (9.40)	.300 (7.62)	.530 (13.46)	.625 (15.88)	.062 (1.57)
R	20	1.160 (29.46)	.370 (9.40)	.300 (7.62)	.730 (18.54)	.814 (20.68)	.062 (1.57)
S	26	1.345 (34.16)	.370 (9.40)	.300 (7.62)	.910 (23.11)	1.000 (25.40)	.062 (1.57)
T	34	1.340 (34.04)	.480 (12.19)	.410 (10.41)	.900 (22.86)	1.032 (26.21)	.062 (1.57)
U	44	1.590 (40.39)	.480 (12.19)	.410 (10.41)	1.140 (28.96)	1.281 (32.54)	.062 (1.57)
V	50	1.710 (43.43)	.480 (12.19)	.410 (10.41)	1.270 (32.26)	1.408 (35.76)	.062 (1.57)

Plug shell
Configuration A

FIGURE 2. Shell configurations.

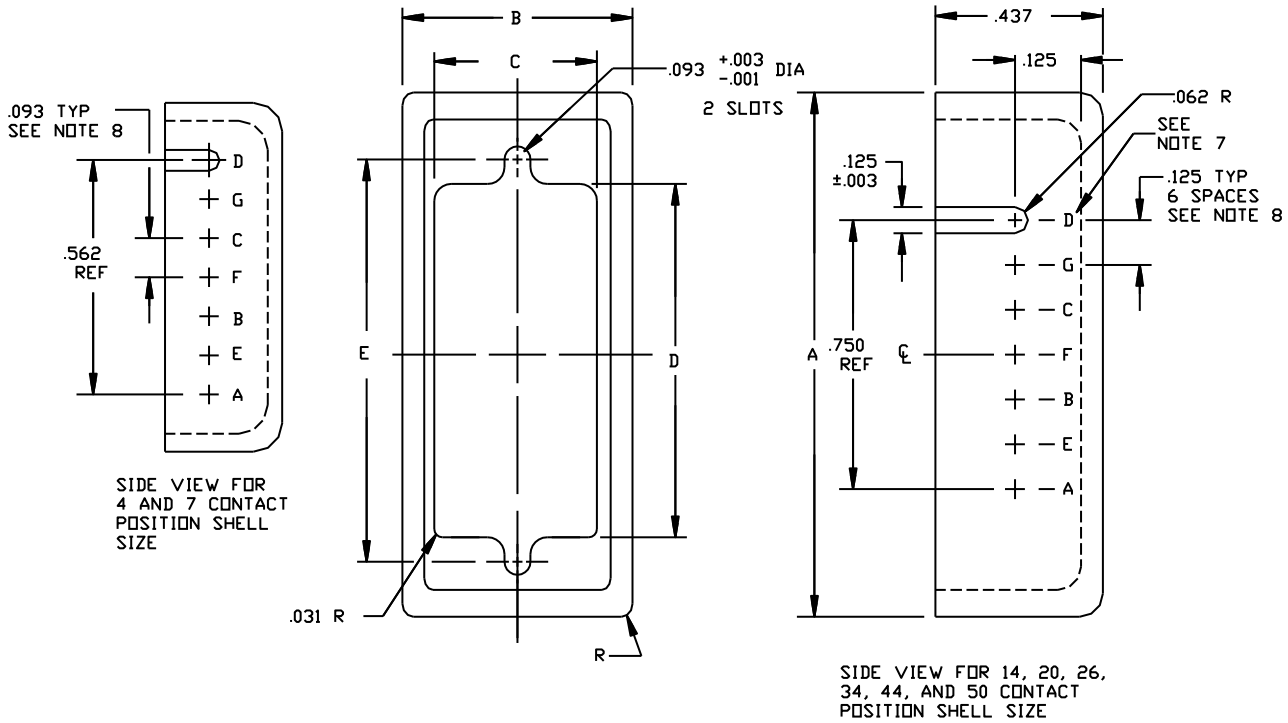

Insert designator	Connector size (number of contacts)	A max	B max	C min	D min	E ± .005 (0.13)	R
N	4	.875 (22.23)	.305 (7.75)	.230 (5.84)	.430 (10.92)	.562 (14.27)	.031 (0.79)
P	7	.875 (22.23)	.305 (7.75)	.230 (5.84)	.430 (10.92)	.562 (14.27)	.031 (0.79)
Q	14	.975 (24.77)	.375 (9.53)	.300 (7.62)	.530 (13.46)	.625 (15.88)	.062 (1.57)
R	20	1.165 (29.59)	.375 (9.53)	.300 (7.62)	.730 (18.54)	.814 (20.68)	.062 (1.57)
S	26	1.350 (34.29)	.375 (9.53)	.300 (7.62)	.910 (23.11)	1.000 (25.40)	.062 (1.57)
T	34	1.344 (34.14)	.480 (12.19)	.410 (10.41)	.900 (22.86)	1.032 (26.21)	.062 (1.57)
U	44	1.595 (40.51)	.480 (12.19)	.410 (10.41)	1.140 (28.96)	1.281 (32.54)	.062 (1.57)
V	50	1.715 (43.56)	.480 (12.19)	.410 (10.41)	1.270 (32.26)	1.408 (35.76)	.062 (1.57)

Receptacle shell

Configuration B

FIGURE 2. Shell configurations – Continued.

Inches	mm
.001	0.03
.003	0.08
.008	0.20
.010	0.25
.031	0.79
.045	1.14
.062	1.57
.063	1.60
.093	2.36
.100	2.54
.125	3.18
.312	7.92
.437	11.10
.562	14.27
.750	19.05

NOTES:
1. Dimensions are in inches.
2. Metric equivalents are given for information.
3. Unless otherwise specified, tolerance is ± .016 inch (0.41 mm).
4. Metric equivalents are in parentheses.
5. Material: Aluminum alloy in accordance with ASTM B209, alloy 6061, or alloy 7075, temper O; .025 inch (0.64 mm) thick.
6. Finish: Anodize in accordance with MIL-A-8625 type I or II.
7. Polarization position letter is .06 inch (1.5 mm) height minimum as shown using permanent marking slot and letter for applicable location only.
8. The location may vary ± .005 inch (0.13 mm) from the centerline.
9. One polarization pin is used when applicable.
10. Insert designators are informational and used only when ordering a shield or shell as a piece part. Example: M28748/7-ROL01L is a receptacle shell with C polarization for a 20-contact position insert.
11. The polarization feature (pin or groove) shall be adjacent to the side closest to the A contact position.

FIGURE 2. Shell configurations – Continued.

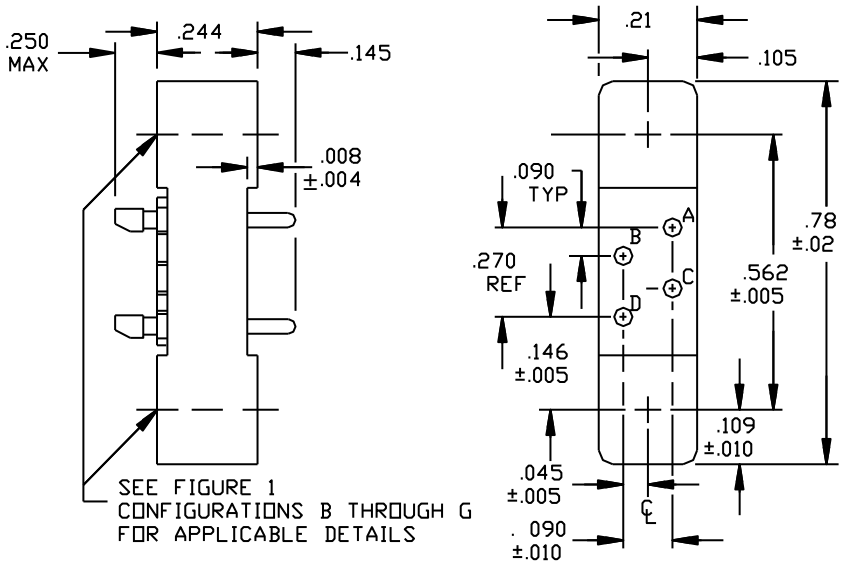

INSERT WITH 4 CONTACTS

CONFIGURATION A

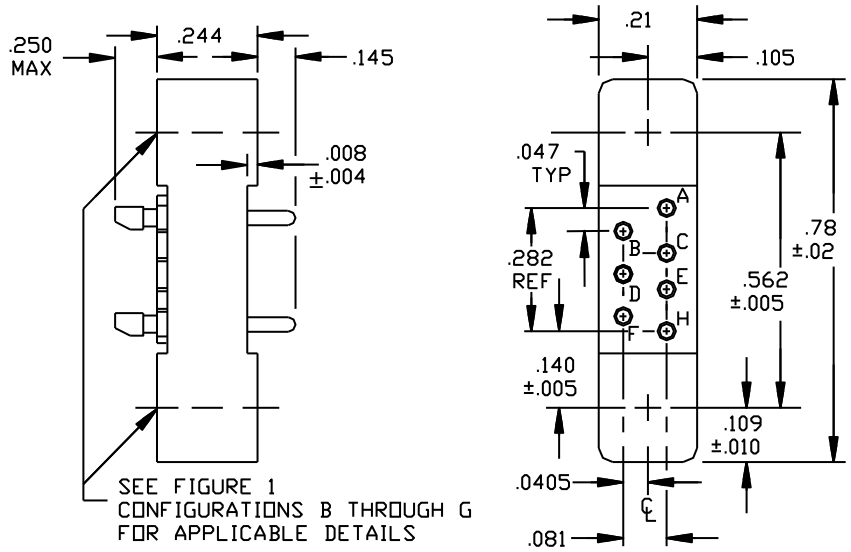

Insert with 7 contacts

Configuration B

FIGURE 3. Insert arrangements.

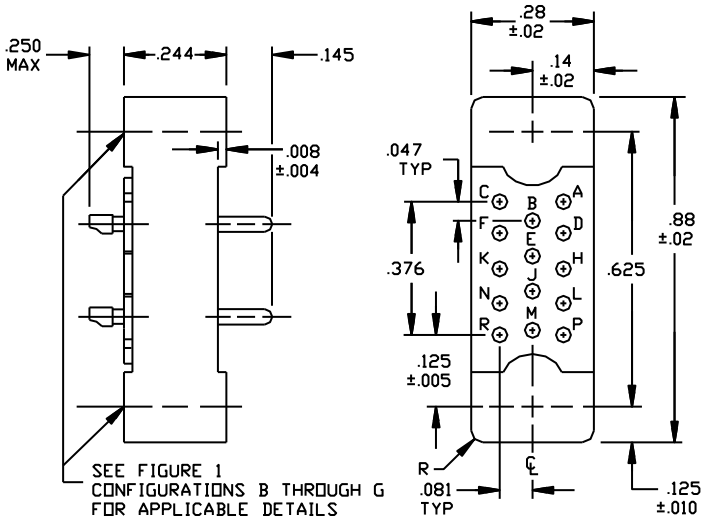

INSERT WITH 14 CONTACTS
CONFIGURATION C

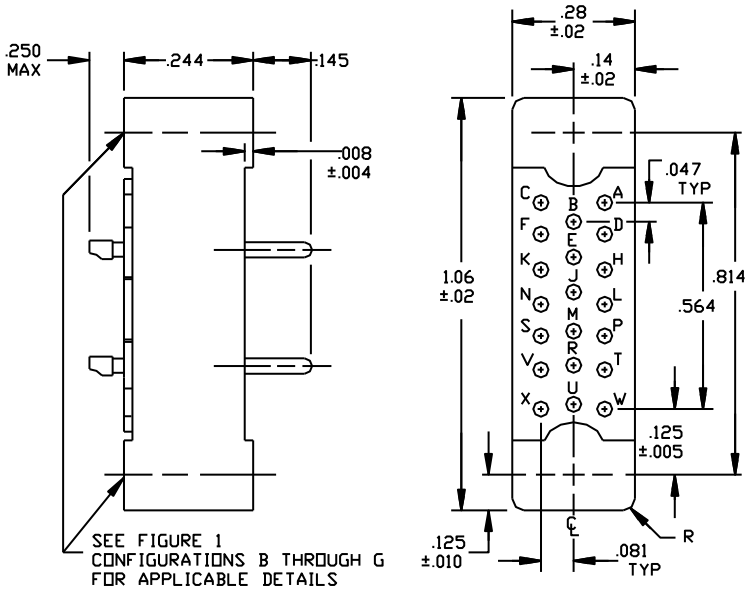

INSERT WITH 20 CONTACTS
CONFIGURATION D

FIGURE 3. Insert arrangements – Continued.

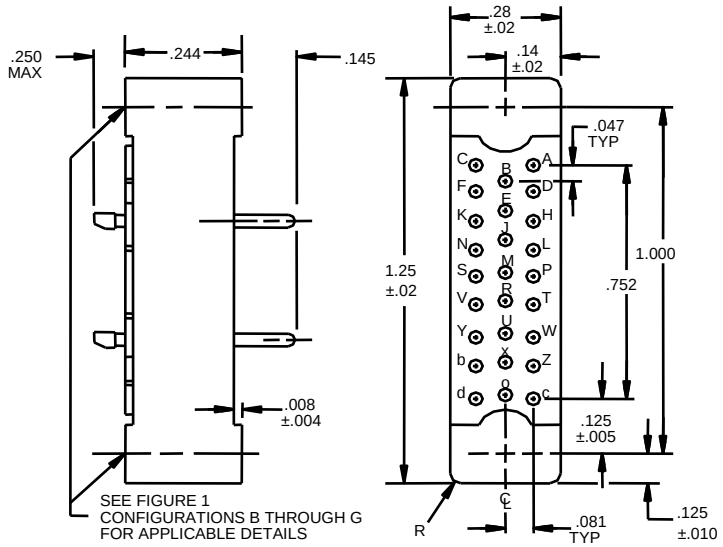

INSERT WITH 26 CONTACTS
CONFIGURATION E

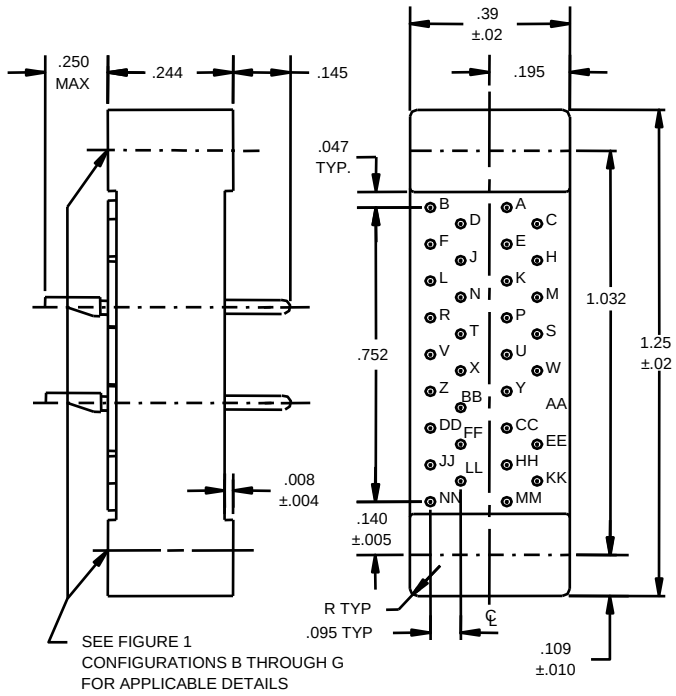

INSERT WITH 34 CONTACTS
CONFIGURATION F

FIGURE 3. Insert arrangements – Continued.

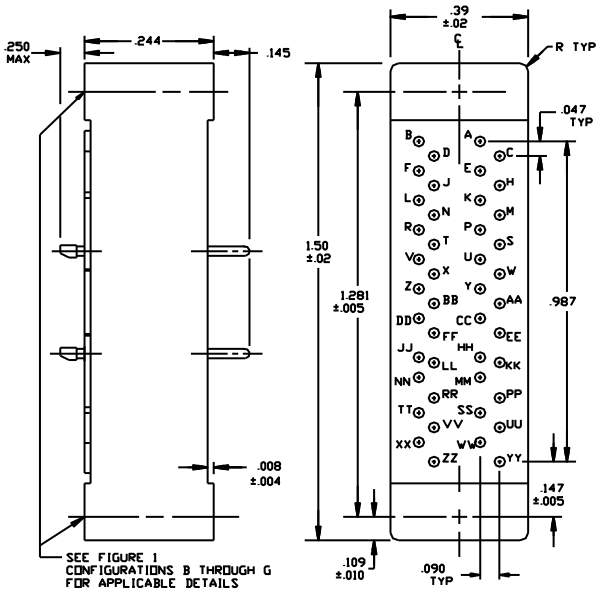

INSERT WITH 44 CONTACTS
CONFIGURATION G

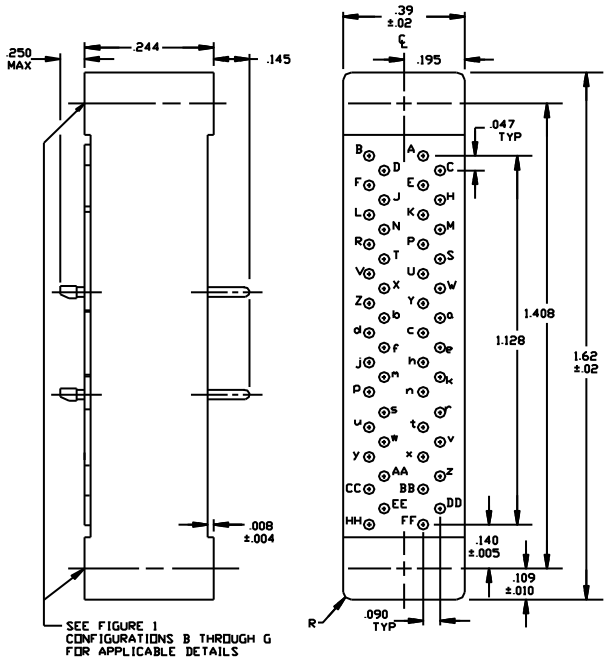

INSERT WITH 50 CONTACTS
CONFIGURATION H

FIGURE 3. Insert arrangements – Continued.

Inches	mm	Inches	mm	Inches	mm
.004	0.10	.145	3.68	.625	15.88
.005	0.13	.146	3.71	.752	19.10
.008	0.20	.147	3.73	.78	19.81
.010	0.25	.195	4.95	.814	20.68
.020	0.51	.21	5.3	.88	22.4
.0405	1.029	.244	6.20	.987	25.07
.045	1.14	.250	6.35	1.000	25.40
.047	1.19	.270	6.86	1.032	26.21
.081	2.06	.28	7.1	1.06	26.9
.090	2.29	.282	7.16	1.128	28.65
.105	2.67	.350	8.89	1.25	31.8
.109	2.77	.376	9.55	1.281	32.54
.125	3.18	.39	9.9	1.408	35.76
.140	3.56	.562	14.27	1.50	38.1
.14	3.6	.564	14.33	1.62	41.1

NOTES:
1. Dimensions are in inches.
2. Metric equivalents are given for information only.
3. Unless otherwise specified, tolerances are ± .02 inch (0.5 mm) for two place decimals and ± .015 inch (0.38 mm) for three place decimals.
4. Tolerance between any two adjacent contact centers shall be ± .004 inch (0.10 mm). Tolerance between any two contact centers, other than adjacent contacts, shall be ± .006 inch (0.15 mm).
5. Contact letter identification may be located on either side of the contact hole.
6. Inserts shall be used with guide pin assemblies or jackscrew assemblies.
7. Insert material: Shall be in accordance with MIL-DTL-28748.

FIGURE 3. Insert arrangements – Continued.

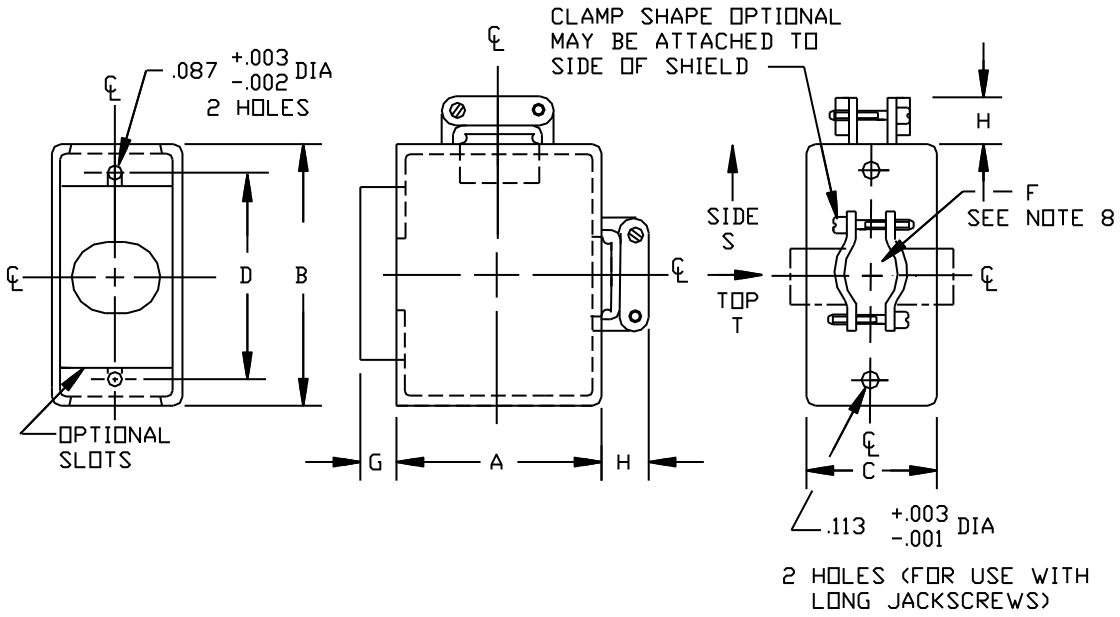

Inches	mm
.001	0.03
.002	0.05
.003	0.08
.087	2.21
.113	2.87

FIGURE 4. Shield.

Insert designator	Cable opening	Connector size	A max min	B	C	D ± .015 (0.38)	F min cable opening	G ± .05 (1.3)	H max
N	1	4	.760 (19.30) .620 (15.75)	.780 (19.81)	.268 (6.81)	.562 (14.27)	.027 (0.69)	.20 (5.1)	.300 (7.62)
P	1	7	.760 (19.30) .620 (15.75)	.780 (19.81)	.268 (6.81)	.562 (14.27)	.027 (0.69)	.20 (5.1)	.300 (7.62)
Q	1 or 2	14	.760 (19.30) .620 (15.75)	.875 (22.23)	.348 (8.84) .334 (8.48) ± .030 (0.76)	.625 (15.88)	.07 (1.8) .037 (0.94)	.20 (5.1)	.350 (8.89)
R	1	20	.760 (19.30) .620 (15.75)	1.064 (27.03)	.348 (8.84)	.814 (20.68)	.081 (2.06)	.215 (5.46)	.350 (8.89)
S	1 or 2	26	.760 (19.30) .620 (15.75)	1.250 (31.75)	.348 (8.84)	1.000 (25.40)	.089 (2.26)	.20 (5.1)	.400 (10.16)
T	1	34	.760 (19.30) .620 (15.75)	1.250 (31.75)	.452 (11.48)	1.032 (26.21)	.11 (2.8)	.20 (5.1)	.400 (10.16)
U	1 or 2	44	1.20 (30.5) max	1.50 (38.1)	.452 (11.48)	1.281 (32.54)	.16 (4.1)	.215 (5.46)	.500 (12.70)
V	1 or 2	50	1.52 (38.61) max	1.625 (41.28)	.452 (11.48)	1.408 (35.76)	.17 (4.3)	.215 (5.46)	.500 (12.70)

NOTES:
1. Dimensions are in inches.
2. Metric equivalents are given for information.
3. Unless otherwise specified, tolerance is ± 0.16 inch (0.41 mm).
4. Metric equivalents are in parentheses.
5. Material: Aluminum alloy in accordance with ASTM B209, alloy 5052, temper H32, .032 inch (0.81 mm) thick.
6. Finish: Anodized in accordance with MIL-A-8625 type I or type II.
7. Referenced documents shall be of the issue in effect on date of invitation for bid.
8. Edges of cable entry hole to be rounded to prevent insulation chafing.
9. Shield supplied on connector which also has protective shall must be without aprons.
10. Insert designators are informational and used only when ordering shield/shell as piece parts. Example: M28748/7-Q1001L is a shield for a 14-position insert, with top cable opening, “no polarization, no jackscrews and no contacts”.

FIGURE 4. Shield – Continued.

REQUIREMENTS:

Dimensions and configuration: See figures 1, 2, 3, and 4.

Mating connector: See MIL-DTL-28748/8.

Part or Identifying Number (PIN): As shown in the following example: 1/

M28748/7-	A	1	0	L	1A
Basic number of specification sheet	Insert designator (see figure 3)	Shield and shield clamp location (see figure 4)	Shell polarization (see figure 2)	Jackscrews or guidepins (see figure 1)	Contacts

Pin code:

Insert designators	Number of contact positions	Shield and shield clamp locations	Polarization designators		Polarization positions 2/
A			A		A
B	4	1-top opening	B		B
C	7	2-side opening 3/	C	Plug	C
D	14	0-none included	D	shells	D
E	20		E		E
F	26		F		F
G	34		G		G
H	44		H	Unpolarized	H
0 4/	50		J		A
	No insert		K		B
	included		L	Receptacle	C
Insert 5/			M	shells	D
designators			N		E
for piece	Connector		P		F
part orders	sizes		Q		G
N	4		R	unpolarized	H
P	7		0	None included	
Q	14	Jackscrews			
R	20	or			
S	26	guidepins 4/			
T	34	L – long jackscrews, configuration E, figure 1			
U	44	F – fixed jackscrews, configuration C, figure 1			
V	50	S – short jackscrews, configuration D, figure 1			
		E – miniature jackscrews slotted head, configuration F, figure 1			
		H – miniature jackscrews hex head, configuration G, figure 1			
		G – guidepins, configuration B, figure 1			
		0 – none included			

Jack and guide location: The jackscrew female (turning or fixed) or guide socket shall be located by the A pin contact.

Contacts: In accordance with MIL-DTL-28748.
1A – 100 percent size 22
1L – none included 6/

1/ The number zero (0) is used to indicate which parts are not included.
2/ Polarization positions are for location of plug and receptacle shell pins and slots (see figure 2)
3/ No side clamps available with insert arrangements A, B, D, E, and F.
4/ Manufacturers, mold bodies, and hardware will not necessarily interchange with each other.
5/ These designators are informational and used for insert reference (connector size) to order an appropriate shield or shell as a piece part. Shields and shells may be ordered together or separately.
6/ The “1L” ordering code shall be used in conjunction with insert designator zero “0” or with the insert designators for piece part orders for which no insert is included.

Superseding information. See table I.

TABLE I. Superseding information.

Superseded documents	Dated	Superseding documents
MS14012C	28 January 1980	MIL-C-28748/7
MS14014C	28 January 1980	
MS14016C	28 January 1980	
MS14018C	28 January 1980	
MS14020C	28 January 1980	
MS14022C	28 January 1980	
MS14024C	28 January 1980	
MS14026C	28 January 1980	
MS14071A	1 May 1986	
MS14072	3 April 1978	

Amendment notations. The margins of this specification are marked with vertical lines to indicate where modifications from this amendment were made. This was done as a convenience only and the Government assumes no liability whatsoever for any inaccuracies in these notations. Bidders and contractors are cautioned to evaluate the requirements of this document based on the entire content irrespective of the marginal notations.

Referenced documents. In addition to MIL-DTL-28748, this document references the following:

MIL-A-8625
MIL-DTL-28748/8
ASTM A276
ASTM A582/A582M
ASTM B209

CONCLUDING MATERIAL

Custodians:
Army – CR
Navy – EC
Air Force – 85
DLA – CC

Preparing activity:
DLA - CC

(Project 5935-2012-071)

Review activities:
Army – AM, AR
Navy – MC
Air Force – 84, 99

NOTE: The activities listed above were interested in this document as of the date of this document. Since organizations and responsibilities can change, you should verify the currency of the information above using the ASSIST Online database at https://assist.dla.mil.