INCH-POUNDS

MIL-DTL-28731/4F
17 May 2016
SUPERSEDING
MIL-C-28731/4E
4 June 1985

DETAIL SPECIFICATION SHEET

CONNECTORS, ELECTRICAL, INSERT (INSULATOR), FEMALE RECTANGULAR, POLARIZED, CENTER SCREW LOCK, FOR 100 REMOVABLE CONTACTS

This specification is approved for use by all Departments and Agencies of the Department of Defense.

The requirements for acquiring the product described herein shall consist of this specification sheet and MIL-DTL-28731.

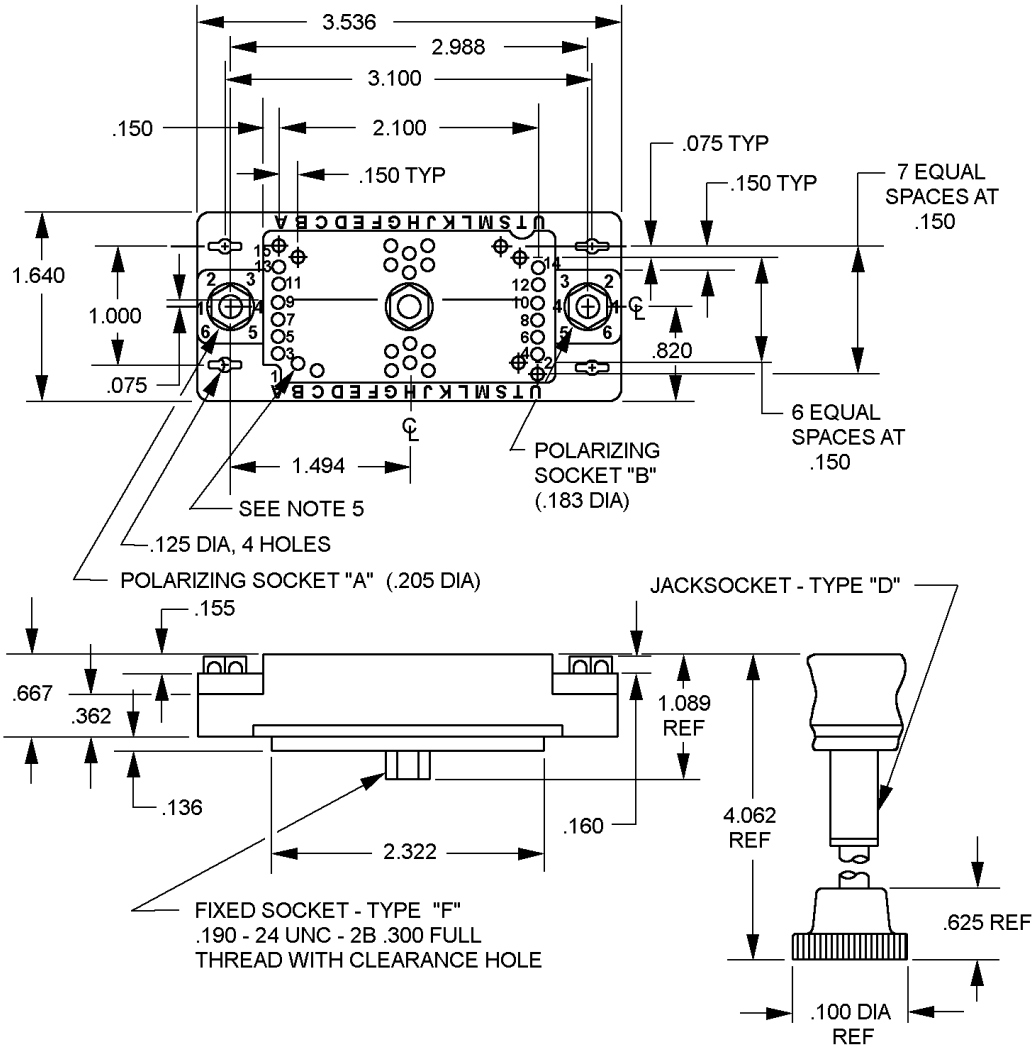

FIGURE 1. Connector, female rectangular.

AMSC N/A

FSC 5935

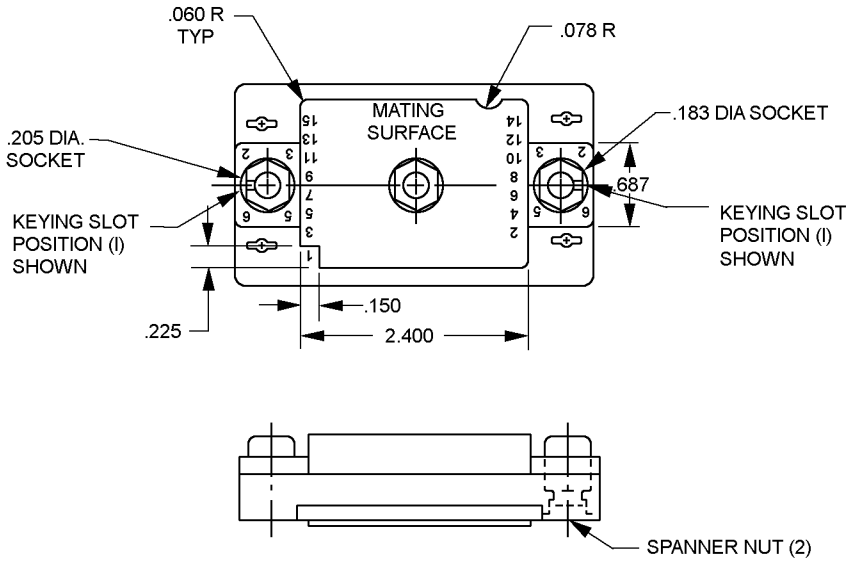

Polarizing position change

Keying position on both polarizing pins can be rotated to desired position by loosening spanner nut (counter-clockwise), resetting pin in one of six positions then retightening spanner nut (clockwise).

NOTE: Overtightening of spanner nut can fracture connector. Spanner keying wrench shown below.

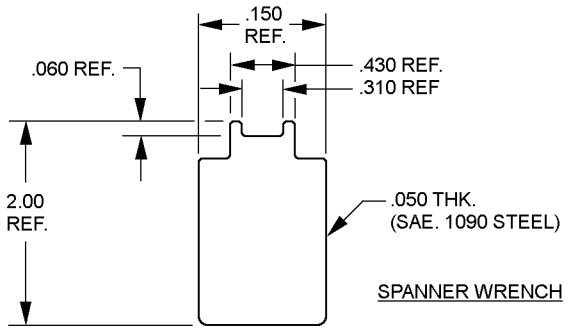

SPANNER WRENCH
Configuration optional

Configuration A – Connector polarization guide (layout)

FIGURE 1. Connector, male rectangular – Continued.

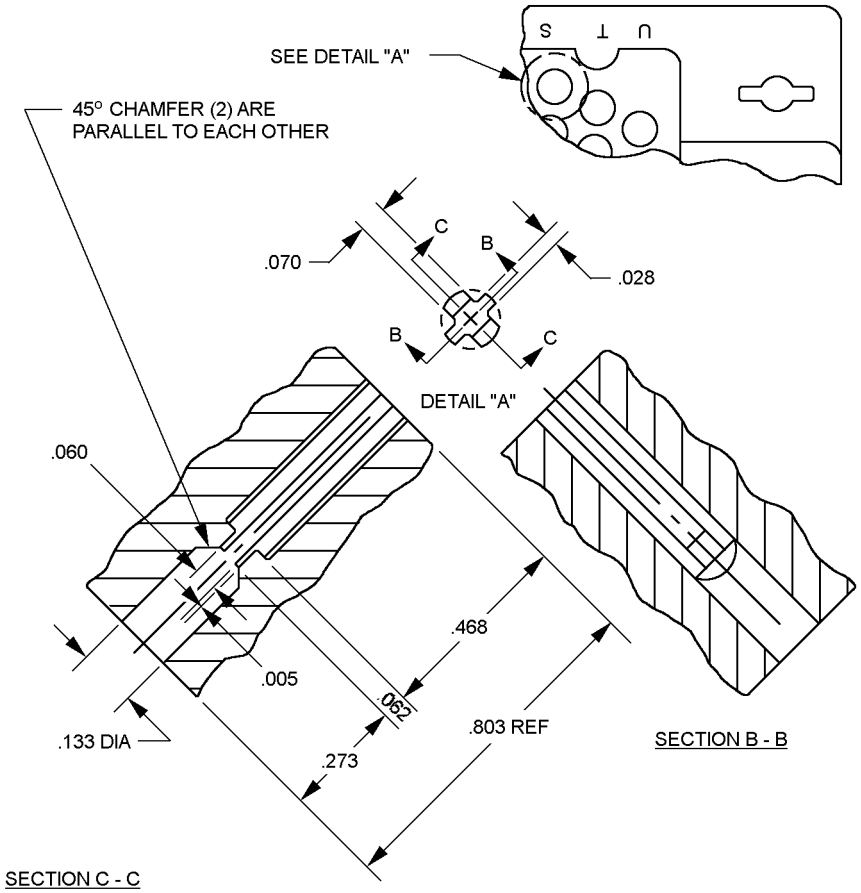

Configuration B – Contact hole detail

Inches	mm	Inches	mm	Inches	mm	Inches	mm
.005	0.13	.160	4.05	495	12.57	1.50	38.1
.028	0.71	.165	4.19	.500	12.70	1.640	41.66
.050	1.27	.183	4.65	.625	15.88	1.646	41.81
.060	1.52	.187	4.75	.652	16.56	2.00	50.8
.062	1.57	.190	4.83	.667	16.94	2.100	53.34
.070	1.78	.205	5.21	.687	17.45	2.322	58.98
.075	1.91	.225	5.71	.803	20.40	2.400	60.96
.078	1.98	.273	6.93	.820	20.83	2.9	73.66
.080	2.03	.300	7.62	.859	21.82	2.988	75.90
.125	2.18	.310	7.87	.959	24.36	2.997	76.12
.133	3.38	.362	9.19	1.000	25.40	3.100	78.74
.136	3.45	.430	10.92	1.089	27.66	3.536	89.81
.140	3.56	.468	11.89	1.390	35.31	4.062	103.17
.150	3.81	.494	12.55	1.494	37.95	4.921	124.99

FIGURE 1. Connector, male rectangular – Continued.

NOTES:

1. Dimensions are in inches.
2. Metric equivalents are given for information only.
3. Tolerances between any two contact centers shall be ± .004 (0.10 mm).
4. Flatness, squareness, and parallelism shall be within dimensional tolerances.
5. Contact hole details shall be in accordance with configuration B.
6. Mating connector information:
   M28731/4-0073, M28731/4-0075, and M28731/4-0077 mate with M28731/3-0109, M28731/3-0110, M28731/3-0112, and M29731/3-0113. M28731/4-0074 and M28731/4-0076 mate with M28731/3-0111, M28731/3-0114 and M28731/3-0115.
7. Polarization information: Polarization pins are provided for indexing to preclude intermixing of adjacent connectors. By using a standard type spanner wrench, polarization pins can be rotated to desired position. For parts supplied directly to the government, polarization will be in the 1-1 position. For other polarization positions see connector polarization guide configuration A (see marking, note 13d). For direct government acquisition a tool is supplied in the unit package for polarization socket adjustment.
8. Contact and terminal designations: Contacts and terminals shall be designated on the insulator using letters in the location shown on figure 1.
9. Tolerance shall be ± .010 (0.25 mm) unless otherwise specified.
10. Patent notice: Patent No. 3,248,686 owned by Elco Corporation. The government has a royalty-free license under the above patent for the benefit of manufacturers of items called for in this specification, either for the government or for use in equipment to be delivered to the government.
11. For direct government acquisition crimp contacts M28731/20-0001 are furnished in a plastic bag in each unit package (see marking, note 13a).
12. For direct government acquisition wrappost contacts are M28731/26-001 (see table I) and are factory installed in connector body (see marking, note 13a).
13. Marking:
    a. Connectors supplied directly to the government shall be marked with the military Part or Identifying Number (PIN) (see table I). Example: M28731/4-0074.
    b. Connectors supplied with contacts to government end users shall be marked with the military PIN (see table I). Example: M28731/4-0074.
    c. Connectors supplied without contacts to government end users shall be marked as follows: Example: M28731/4D (socket type from table I). The user shall complete the remaining portion of the military PIN as shown in table I based upon contact type he assembles. Example: M28731/4D-0074.
    d. Polarization position marking is not required unless otherwise specified. When required polarization marking shall be in accordance with the connector polarization guide (see configuration A). The marking shall appear following the PIN.
14. Applicable contact insertion and removal tools:
    Insertion – SAE AS81969/13, PIN: M81969/13-01
    Removal – SAE AS81969/11, PIN: M81969/11-01
15. When double wire crimp contact MIL-DTL-28731/23 is required for use with connector, it shall be ordered separately.

FIGURE 1. Connector, male rectangular – Continued.

REQUIREMENTS:

Dimensions and configuration: See figure 1.

Mating and unmating forces (torque): 130 inch-ounces, maximum.

Mechanical shock (specified pulse): Applicable.

PIN: See table I.

TABLE I. PIN information.

PIN	Actuating hardware	Polarizing socket position		Contact type
		A .205 DIA	B .183 DIA	
M28731/4-0073	Fix socket type F	1	1	Crimp, MIL-DTL-28731/20 1/
M28731/4-0074	Jack socket type D	1	1	Crimp, MIL-DTL-28731/20 1/
M28731/4-0077	Fix socket type F	1	1	Wrappost MIL-DTL-28731/26 2/

1/ See figure 1, note 11.
2/ See figure 1, note 12.

Changes from previous issue. Marginal notations are not used in this revision to identify changes with respect to the previous issue due to the extent of the changes.

Referenced documents. In addition to MIL-DTL-28731, this document references the following:

MIL-DTL-28731/20
MIL-DTL-28731/23
MIL-DTL-28731/26
SAE AS81969/11
SAE AS81969/13

CONCLUDING MATERIAL

Custodians:
Army – CR
Navy – EC
Air Force – 85
DLA - CC

Review activities:
Army – AR, AT, CR4, MI
Navy – AS, MC, OS
Air Force – 19, 99

Preparing activity:
DLA - CC

(Project 5935-2016-043)

NOTE: The activities listed above were interested in this document as of the date of this document. Since organizations and responsibilities can change, you should verify the currency of the information above using the ASSIST Online database at https://assist.dla.mil/.