INCH-POUND

MIL-DTL-28731F
January 22, 2007
SUPERSEDING
MIL-DTL-28731E
11 October 2000

DETAIL SPECIFICATION

CONNECTORS, ELECTRICAL, RECTANGULAR, REMOVABLE CONTACT, FORMED BLADE, FORK TYPE (FOR RACK AND PANEL AND OTHER APPLICATIONS)

GENERAL SPECIFICATION FOR

This specification is approved for use by all Departments and Agencies of the Department of Defense.

1. SCOPE

1.1 Scope. This specification covers rectangular, electrical connectors with removable formed blade; fork type contacts intended for use in electronic and electrical equipment (see 6.1).

2. APPLICABLE DOCUMENTS

2.1 General. The documents listed in this section are specified in sections 3, 4, or 5 of this specification. This section does not include documents cited in other sections of this specification or recommended for additional information or as examples. While every effort has been made to ensure the completeness of this list, document users are cautioned that they must meet all specified requirements documents cited in sections 3, 4, or 5 of this specification, whether or not they are listed.

2.2 Government documents.

2.2.1 Specifications standards, and handbooks. The following specifications, standards, and handbooks form a part of this document to the extent specified herein. Unless otherwise specified, the issues of these documents are those cited in the solicitation or contract (see 6.2).

Comments, suggestions, or questions on this document should be addressed to: Commander, Defense Supply Center Columbus, Attn: VAI, P.O. Box 3990, Columbus, Ohio, 43218-3990 or emailed to RectangularConnector@dscc.dla.mil. Since contact information can change, you may want to verify the currency of this address information using the ASSIST Online database at http://assist.daps.dla.mil.

AMSC N/A FSC 5935

DEPARTMENT OF DEFENSE

MIL-F-14072	-	Finishes for Ground Based Electronic Equipment
MIL-C-22520/17	-	Crimping Tools, Terminal, Hand, Wire Termination for Crimp Type Removable Contacts, Electric Connectors
MIL-M-24519	-	Molding plastics, Electrical, Thermoplastic
MIL-C-28731/20	-	Connector, Electrical, Contact, Fork Type, Crimp Removable (8.5 Amperes)
MIL-C-28731/35	-	Connector, Electrical, Contact, Fork Type, Crimp Removable (5.0 Amperes)
MIL-I-81969/4	-	Installing and Removal Tools, Connector Electrical Contact, (Fork Type Wrappost/Crimp, Removable Contacts), Electrical Connectors, Type II, Class I, Composition C
MIL-I-81969/5	-	Installing and Removal Tools, Connector Electrical Contact, (Fork Type Crimp, Removable), Type I, Class 1, Composition A
MIL-I-81969/11	-	Installing and Removal Tools, Connector Electrical Contacts, (Type CR), Type II, Class 1, Composition C
MIL-I-81969/13	-	Installing and Removal Tools, Connector Electrical Contact, (Type CR), Type I, Class 1, Composition A

(See ASSIST database for list of specification sheets).

DEPARTMENT OF DEFENSE STANDARDS

MIL-STD-202	-	Tests Methods for Electronic and Electrical Component Parts
MIL-STD-889	-	Dissimilar Metals
MIL-STD-1285	-	Marking of Electrical and Electronic Parts

(Copies of these documents are available online at http://assist.daps.dla.mil/quicksearch/ or http://assist.daps.dla.mil or from the Standardization Document Order Desk, 700 Robbins Avenue, Building 4D, Philadelphia, PA 19111-5094.)

2.2 Other Government documents, drawing, and publications. The following other Government documents, drawings, and publications form a part of this document to the extent specified herein. Unless otherwise specified, the issues are those cited in the solicitation. The following documents form a part of this specification to the extent specified herein.

ASTM INTERNATIONAL

ASTM A342/A342M	-	Materials, Feebly Magnetic, Permeability of
ASTM A484/A484M	-	General Requirements for Stainless and Heat-Resisting Wrought Steel Products (Except Wire)
ASTM A582/A582M	-	Free-Machining Stainless and Heat-Resisting Steel Bars, Hot Rolled or Cold Finished
ASTM B85	-	Standard Specification for Aluminum Alloy Die Castings
ASTM B139/B139M	-	Standard Specification for Phosphor Bronze Rod, Bar, and Shapes.
ASTM B488	-	Standard Specification of Gold for Engineering Uses
ASTM D5948	-	Standard Specification for Molding Compounds, Thermosetting

(Copies of these documents are available online at http://www.astm.org or from the ASTM International, P.O. Box C700, 100 Barr Harbor Drive, West Conshohocken, PA 19428-2959.)

ELECTRONIC INDUSTRIES ALLIANCE (EIA)

EIA-364	-	Electrical Connector/Socket Test Procedures Including Environmental Classifications
EIA-364-06	-	Contact Resistance Test Procedure for Electrical Connectors
EIA-364-08	-	Crimp Tensile Strength Test Procedure for Electrical Connectors
EIA-364-13	-	Mating and Unmating Forces Test Procedure for Electrical Connectors
EIA-364-20	-	Withstanding Voltage Test Procedures for Electrical Connectors, Sockets and Coaxial Contacts
EIA-364-21	-	Insulation Resistance Test Procedure for Electrical Connectors, Sockets, and Coaxial Contacts
EIA-364-23	-	Low Level Contact Resistance Test Procedure for Electrical Connectors and Sockets
EIA-364-26	-	Salt Spray Test Procedure for Electrical Connectors, Contacts and Sockets
EIA-364-27	-	Mechanical Shock (Specified Pulse) Test Procedure for Electrical Connectors
EIA-364-28	-	Vibration Test Procedure for Electrical Connectors and Sockets
EIA-364-29	-	Contact Retention Test Procedure for Electrical Connectors
EIA-364-31	-	Humidity Test Procedure for Electrical Connectors and Sockets
EIA-364-32	-	Thermal Shock (Temperature Cycling) Test Procedure for Connectors and Sockets

(Copies of these documents are available online at http://www.eia.org or from the Electronic Industries Alliance, Technology Strategy & Standards Department, 2500 Wilson Boulevard, Arlington, VA 22201.)

SAE INTERNATIONAL

SAE-AMS-P-81728	-	Plating, Tin Lead (Electrodeposited).
SAE-AMS-QQ-N-290	-	Nickel Plating (Electrodeposited).
SAE-AMS-QQ-P-416	-	Plating, Cadmium (Electrodeposited).
SAE-AMS-STD-66	-	Steel: Chemical Composition and Hardenability.
SAE-AS22759/9	-	Wire, Electric, Fluoropolymer-Insulated, Extruded TFE, Silver-Coated Copper Conductor, 1000-Volt.

(Copies of these documents are available online at http://www.sae.org or from the SAE World Headquarters, 400 Commonwealth Drive, Warrendale, PA 15096-0001.)

2.3 Order of precedence. In the event of conflict between the text of this document and the references cited herein (except for related specification sheets), the text of this document takes precedence. Nothing in this document, however, supersedes applicable laws and regulations unless a specific exemption has been obtained.

3. REQUIREMENTS

3.1 Specification sheets. The individual item requirements shall be as specified herein and in accordance with the applicable specification sheet. In the event of any conflict between the requirements of this specification and the specification sheet, the latter shall govern.

3.2 First article. When specified (see 6.2), a sample shall be subjected to first article inspection in accordance with 4.5.

3.3 Materials. Examples of materials used in manufacturing these connectors are identified herein. However, when a specific material is not identified, a material shall be used which will enable the sockets and accessories to meet the requirements of this specification. Acceptance or approval of a constituent material shall not be construed as a guaranty of acceptance of the finished product.

3.3.1 Reference materials, plating, and processes. The materials, plating and processes identified in this specification assure that connectors will properly interface to similar industry standard and government specified connector systems, without problems such as electrochemical contamination or deterioration, electrolytic corrosion, or excessive surface wear. Manufacturers may be allowed minor variations from these exact requirements upon written request to, and subsequent written approval from DSCC-VAI. Significant variations from this specification, especially those which could affect short or long term reliability or performance, must undergo the normal coordination and approval process. Any short or long term failures or reliability problems due to such deviation shall be the responsibility of the supplier.

3.3.2 Recycled, recovered, or environmentally preferable material. Recycled, recovered, or environmentally preferable materials should be used to the maximum extent possible provided that the material meets or exceeds the operational and maintenance requirements, and promotes economically advantageous life cycle costs.

3.3.3 Nonmagnetic materials. All parts, with the exception of screws, washers, and mounting hardware, shall be made from materials, which are classified, as nonmagnetic and the permeability of the basic connector shall be less than 2.0μ. The permeability shall be checked by the instrument described in ASTM A342/A342M or equivalent (see 4.7.2).

3.3.4 Dissimilar metals. When dissimilar metals are used in intimate contact with each other, protection against electrolysis and corrosion shall be provided as specified in MIL-STD-889.

3.3.5 Contacts and plating.

3.3.5.1 Contacts. Contacts shall be made of phosphor bronze in accordance with ASTM B139/B139M.

3.3.5.1.1 Plating. Unless otherwise specified, the contacts shall be plated as follows.

3.3.5.1.2 Contact mating area. The contact mating area shall be gold plated in accordance with ASTM B488, type 2, code C, class 1.27 μm (50 microinches minimum) over a nickel underplate in accordance with SAE-AMS-QQ-N-290, class 2, 50 microinches (1.27 μm) minimum.

3.3.5.1.3 Remaining areas of the contact. Those areas of the contact not included in 3.3.5.1.1 and 3.3.5.1.2 shall be nickel plated in accordance with SAE-AMS-QQ-N-290, class 2 with a minimum thickness of 50 microinches (1.27 μm). Overplating is not required in this area.

3.3.5.1.4 Contacts furnished in strip form. If contacts are furnished in strip form, when the contact is separated from the carrier strip, the absence of the nickel or other plating at the broken edge of the contact is acceptable, provided it is in a nonfunctional area of the contact and any corrosion formed as a result of the salt spray test does not creep into the contact mating area.

3.3.5.2 Terminations.

3.3.5.2.1 Wrappost terminations. Wrappost terminations shall be gold plated in accordance with ASTM B488, type 2, code C, class 1.27 μm (50 microinches minimum) over a nickel underplate in accordance with SAE-AMS-QQ-N-290, class 2, 30 microinches (0.76 μm) minimum.

3.3.5.2.2 Solder terminations. Solder terminations shall be tin-lead plated in accordance with SAE-AMS-P-81728, .00010 inch (0.0025 mm) minimum thickness, over a nickel underplate in accordance with SAE-AMS-QQ-N-290, class 2, 50 microinches (1.27 μm) minimum.

3.3.5.2.3 Crimp terminations. Crimp terminations shall be gold plated, 50 microinches (1.27 μm) minimum over a nickel underplate in accordance with SAE-AMS-QQ-N-290, class 2, 50 microinches (1.27 μm) minimum.

3.3.6 Connector shields and clamps. Shields and clamps shall be die-cast aluminum or corrosion-resistant steel. Die-cast aluminum, if used, shall be in accordance with composition number 13, A13, A380, or 360 or ASTM B85, and workmanship in accordance with ASTM B85. Sheet metal shall be in accordance with SAE-AMS-STD-66. All shields and clamps (except nylon strap) shall be plated in accordance with finish number M225 of MIL-F-14072.

3.3.7 Engaging hardware. All stress bearing hardware shall be type 303 or 416 corrosion-resistant steel in accordance with ASTM A484/A484M and ASTM A582/A582M. All hardware shall be passivated in accordance with finish number E300 of MIL-F-14072. Actuating hardware shall be dry film lubricated.

3.3.8 Other hardware. Nonstress bearing hardware shall be type 303 or 416 corrosion resisting steel in accordance with ASTM A484/A484M and ASTM A582/A582M, or noncorrosion resisting metal parts which shall be plated with cadmium in accordance with SAE-AMS-QQ-P-416, class 3, type II. All finishes shall be conductive unless otherwise specified (see 3.1).

3.3.9 Insert material. Unless otherwise specified (see 3.1), insert material shall be a diallyl phthalate in accordance with ASTM D5948, type SDG-F, GDI-30F, or polyester thermoplastic in accordance with MIL-M-24519, (reground material shall not be used).

3.4 Design, construction, and physical dimensions.

3.4.1 Connectors (see 3.1). Connectors shall be of the design, construction, and physical dimensions specified. The temperature range shall be from -65°C to +125°C. The connector shall permit individual insertion and removal of the contacts with the insertion and removal tools in accordance with 3.4.2.3. Wire conductors shall be attached to the applicable contacts by crimping, soldering, or wrapping as specified herein.

3.4.1.1 Insert design. Inserts shall be on one-piece construction and shall be such that they will not crack, chip, or break in normal service or assembly. Split or hollow inserts glued or bonded together shall not be used. The insert dimensions and contact hole shall be as specified on the individual specification sheet. Contacts when assembled in the male or female plug shall be recessed a minimum of .020 inch (0.51 mm) below the outer protective flange. Contacts when assembled in the female or male receptacle shall be recessed a minimum of .020 inch (0.51 mm) below the face of the plastic insert.

3.4.2 Contacts. Contact configuration shall be as specified (see 3.1).

3.4.2.1 Contact design. Contact design shall provide for crimp, solder, or wrappost terminations and shall be designed so they will not be damaged by mating or unmating with the connectors. The contact, for use in both the plug and receptacle, shall be of the formed blade, fork type. Mating contacts shall be 90° to each other when assembled and provide for positive spring contact wiping action. Each contact shall contain a means of firmly locking itself when installed in the insert. The locking feature shall be such that insertion and removable of the contact may be accomplished using tools as specified in 3.4.2.3.

3.4.2.2 Crimping tool. The crimping tool shall be in accordance with MIL-C-22520/17.

3.4.2.3 Insertion and removal tools. Insertion and removal tools shall be used to assemble and disassemble contacts. These tools shall be in accordance with MIL-I-81969/11, MIL-I-81969/13, MIL-I-81969/4 and MIL-I-81969/5.

3.4.2.4 Wire inspection. Subsequent to crimping of the wire to the contact, visual inspection shall be made to ascertain that the wire fully engages the wire crimp tabs.

3.4.2.5 Wrappost geometry. Wrappost geometry shall be in accordance with figures 1 and 2 for the wire sizes shown.

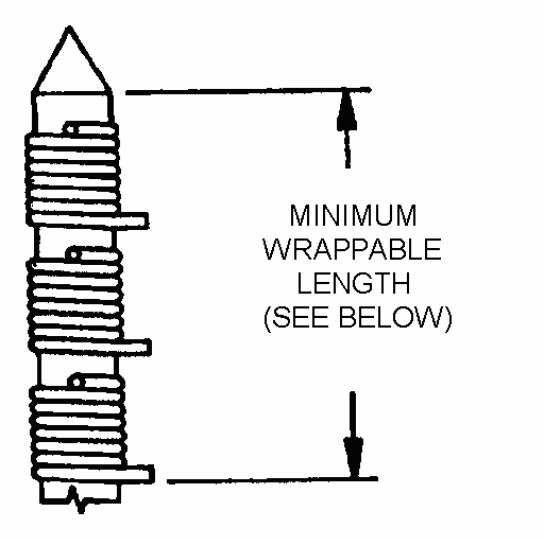

Number Of wrapped Connections	Minimum wrappable length						
	30 AWG	28 AWG	26 AWG	24 AWG	22 AWG	20 AWG	18 AWG
1	.185 (4.70)	.219 (5.56)	.226 (5.74)	.258 (6.55)	.303 (7.69)	.327 (8.31)	.391 (9.93)
2	.320 (8.13)	.388 (9.85)	.402 (10.21)	.466 (11.83)	.556 (14.12)	.604 (15.34)	.732 (18.59)
3	.455 (11.56)	.557 (14.15)	.578 (14.68)	.674 (14.43)	.809 (20.55)	.881 (22.37)	1.073 (27.25)

NOTES:
1. Dimensions are in inches.
2. Metric equivalents are in parenthesis and are given for information only.

FIGURE 1. Wrappable length.

3.4.2.6 Parallelism. See figure 2.

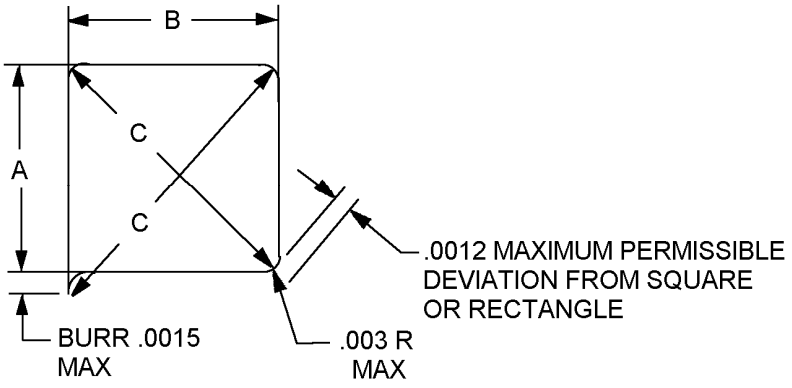

A (mm)	B (mm)	C (mm)	Parallelism (mm)	Straightness inch/inch
.025 (0.63) nominal .022 (0.56) Min	.025 (0.63) nominal .022 (0.56) Min	.0355 (0.902) Max .0325 (0.825) Min	.002 (0.05)	.005
.045 (1.14) nominal .042 (1.07) Min	.045 (1.14) nominal .042 (1.07) Min	.066 (1.68) Max .059 (1.50) Min	.005 (0.13)	.005
.030 (0.76) nominal .027 (0.69) Min	.060 (1.52) nominal .057 (1.45) Min	.070 (1.78) Max .063 (1.60) Min	.005 (0.13)	.005

FIGURE 2. Wrappost geometry.

3.4.3 Polarization. Polarization of the plug with its receptacle shall be accomplished by mechanical means such as the protective shell; bosses, guide pins, guide sockets, or jackscrews (see 3.1).

3.4.4 Mating. Unless otherwise specified, connector plugs and receptacles shall be capable of being mated and unmated by hand without the aid of special tools, within the temperature range (see 3.1).

3.4.5 Mounting accessories. Guide pins, guide sockets, shields, and other hardware shall be as specified (see 3.1).

3.4.6 Actuating hardware design. To aid in the engagement of connectors, actuating hardware shall be used as required. This hardware shall be categorized as follows and be denoted by their associated type.

3.4.6.1 Type C jackscrew. Rotatable actuating member with a male thread (engages with a type F fixed socket). The actuating knob includes a screwdriver slot.

3.4.6.2 Type D jacksocket. Rotatable actuating member with a female thread (engages with a type E fixed screw).

3.4.6.3 Type E fixed screw. Fixed actuating member with a male thread (engages with a type D or H jacksocket).

3.4.6.4 Type F fixed socket. Fixed actuating member with a female thread (engages with a type C or G jackscrew).

3.4.6.5 Type G jackscrew. Rotatable actuating member with a male thread (engages with a type F fixed socket). Actuating knob is for hand tightening only.

3.4.6.6 Type H jacksocket. Rotatable actuating member with a female thread (engages with type E fixed screw). Actuating knob includes a screwdriver slot.

3.5 Interchangeability. All contacts shall be capable of being assembled in the molded insulators (see 3.1) and be completely interchangeable with each other with respect to installation (physical) and performance (function) as specified herein. All complete connectors including their complement of contacts, having the same Part or Identifying Number (PIN) shall be completely interchangeable with each other with respect to installation (physical) and performance (function) as specified herein. Tools shall be capable of properly inserting and removing the contacts from the molded inserts. Evidence, such as dimensional data, may be required by the Government in order to assure that contacts, complete connector assemblies, and tools, will be interchangeable and meet the requirements of this specification.

3.5.1 Plugs and receptacles. Plugs and receptacles of a given size and design, manufactured by one source to the requirements of this specification, shall be capable of mating with associated plugs and receptacles manufactured to the requirements of this specification by other sources. The connector assemblies having the same PIN shall be directly and completely interchangeable with respect to installation and performance.

3.5.2 Loose crimp contacts. Removable contacts are to be included with the connector. For connectors supplied with loose crimp contacts, the quantity of crimp contacts to be supplied with each connector shall consist of a full complement of contacts plus one spare contact for connectors using 26 contacts of each size used shall be supplied.

3.6 Performance. Connectors shall be designed to meet the requirements specified herein.

3.6.1 Insulation resistance. When tested as specified in 4.7.2, the resistance shall be not less than 5,000 megohms, except after humidity exposure the resistance shall be not less than 1,000 megohms.

3.6.2 Temperature cycling. When tested as specified in 4.7.3, the connectors shall not show evidence of physical damage.

3.6.3 Dielectric withstanding voltage. When tested as specified in 4.7.4, the connectors shall withstand 1,500 volts without flashover.

3.6.4 Contact retention. When tested as specified in 4.7.5, individual contacts shall withstand an axial load of 10 pounds (4.54 kilograms) without damage to the contact, insert or contact retaining clip.

3.6.5 Vibration. When the complete connector assembly, wired with the appropriate size wire, is tested as specified in 4.7.6 (10G, 10 to 500 Hz), there shall be no cracking, breaking, or loosening of parts. There shall be no loss of electrical continuity with any of the contact circuits for more than 1 microsecond with 100 milliamperes flowing in each circuit.

3.6.6 Mechanical shock. When tested as specified in 4.7.7, there shall be no evidence of failure of metallic or dielectric materials, nor shall the mated portions of the connector become disengaged. For connectors exposed to the high impact shock test, there shall be no loss of electrical continuity for more than 20 milliseconds to any of the contact circuits, or 1 microsecond for connectors tested for compliance to the specified pulse shock test.

3.6.7 Mating and unmating forces (connector assembly). When tested as specified in 4.7.8, the force and torque required to either engage or separate any pair of mated connectors (plug and receptacle) shall not exceed the maximum force and torque specified (see 3.1).

3.6.8 Humidity. When tested as specified in 4.7.9, the connectors shall meet the following requirements:

a. Insulation resistance - Shall not be less than 1,000 megohms.
b. Dielectric withstanding voltage - 50 percent of specified voltage (see 3.8).

3.6.9 Durability. When tested as specified in 4.7.10, the connector assembly shall withstand the test without evidence of electrical or mechanical damage that impairs the normal operation of the connector.

3.6.10 Salt spray (corrosion). When tested as specified in 4.7.11, there shall not be sufficient corrosion on the connectors to interfere with mating or unmating, or cause exposure of base metal on contact sets when inspected at less than 10 power magnification. Following the test, the contacts only shall meet the following requirement:

a. Low level circuits - Shall not exceed the potential drop values specified in 3.6.15.

3.6.10.1 Contacts supplied in reels. When contacts are separated from the carrier strip, base metal may be exposed. Following the salt spray test, any corrosion that may occur in the region of the separation, shall not interfere with the ability of the contacts to meet the subsequent test requirements, either for contacts tested separately, or as part of the connector, including the ability to mate or unmate the connectors.

3.6.11 Contact resistance. When tested as specified in 4.7.12, the contact resistance of each mated pair of contacts shall not exceed the potential drop requirements in table I.

TABLE I. Contact resistance.

Wire size AWG	Test current (amperes)	Maximum potential drop (mV)	Contact resistance (maximum) (mΩ)
18	8.5	51.0	6.0
20	7.5	45.0	6.0
22	5.0	40.0	8.0
24	3.0	26.0	8.7
26	2.0	24.0	12.0
28	1.5	22.0	14.7
30	1.0	20.0	20.0

3.6.12 Crimp tensile strength (crimp contact) (when specified, see 3.1). When tested as specified in 4.7.13, the contact to wire crimp shall not break or pull out at less than the minimum tensile strength specified in table II.

TABLE II. Crimp tensile strength.

Wire size AWG (7 or 19 strand)	Minimum tensile strength (pounds)
18	40.0
20	25.0
22	15.0
24	10.0
26	5.0
28	3.0
30	1.5

3.6.13 Crimp tensile strength (adapter to crimp contact). When tested as specified in 4.7.13.1, the adapter to contact crimp shall not break or pull out at less than the minimum tensile strength specified (see 3.1).

3.6.14 Contact separating forces (contacts). When contacts are tested as specified in 4.7.14, unless otherwise specified (see 3.1), the forces required to disengage the contacts shall be 12 ounces per contact.

3.6.15 Low level circuit resistance (contacts). When tested as specified in 4.7.15, the values of contact resistance shall not exceed the potential drop in table III.

3.6.16 Resistance to soldering heat. Connectors shall withstand the tests specified in 4.7.16.

TABLE III. Low level circuit.

Wire size AWG	Contact resistance (maximum) 1/ (mΩ)	Maximum potential drop (μV)
18	7	7.0
20	9	9.0
22	15	15.0
24	20	20.0
26	25	25.0
28	40	40.0
30	50	50.0

1/ Test current shall be 1mA.

3.7 Marking.

3.7.1 Connectors. Each connector shall be legibly and permanently marked, die cast, or stamped in accordance with MIL-STD-1285. The marking shall be placed on a side of the connector parallel to the long dimension. Wherever possible, the marking information shall be located such that it is not obscured by the subsequent addition of a connector shield.

3.7.2 Contact positions. Letters shall be arranged to avoid confusion between contacts. All letters or numerals shall appear on the front and rear face of each insert. Lettering of the plug insert shall correspond with that of the mating receptacle insert.

3.8 Workmanship. The workmanship shall be in accordance with the requirements contained herein. Connectors shall meet the design and dimensional requirements of this specification. There shall be no evidence of poor molding or fabricating, damaged or improperly assembled contacts, peeling or chipping of the plating or finish, nicks and burrs of metal parts surfaces. The contacts shall be free from burrs or sharp corners, which would damage the plating of mating connectors.

4. VERIFICATION

4.1 Classification of inspection. The inspections requirements specified herein are classified as follows:

a. First article inspection (see 4.5).

b. Conformance inspection (see 4.6).

4.2 Test equipment and inspection facilities. Test and measuring equipment and inspection facilities of sufficient accuracy, quality and quantity to permit performance of the required inspection shall be established and maintained by the contractor.

4.3 Materials inspection. Materials inspection shall consist of certification supported by verifying data that the materials and finishes listed in 3.3.6, 3.3.7, 3.3.8, and 3.3.9, are used in fabricating the connectors, and shall be in accordance with the applicable referenced specifications or requirements prior to such fabrication.

4.4 Inspection conditions. Unless otherwise specified herein, all inspections shall be performed in accordance with the test conditions specified in the "GENERAL REQUIREMENTS" of EIA-364 and MIL-STD-202.

4.5 First article inspection. First article inspection shall consist of materials inspection, all the tests in table IV (connectors), or table V (contacts) as applicable to the contract or purchase order, and examinations of this specification. First article inspection shall be performed at a laboratory acceptable to the Government (see 6.3).

4.5.1 Sample size and inspection routine.

4.5.1.1 Connectors - first article inspection of individual contacts. Six each completely assembled plug or receptacle (2 of each type minimum) complete with guide pins, jackscrews, and with the insulator arrangement in accordance with specification sheet (see 3.1), shall be submitted for first article inspection. Mating plugs and receptacles shall be furnished. Contacts shall be installed in the insulator (see 4.5.2). The samples shall then be subjected to the inspection specified in table IV.

4.5.1.2 Connectors - first article inspection for a group of connectors. When submitting a group of connectors for first article inspection, connectors or other specification sheets that are of the same design, construction, and materials, and having fewer contacts than those submitted need not be separately submitted and tested, provided that the submitted group of connectors pass all requirements. Completely assembled connectors (plugs and receptacles) with the maximum number of contacts and accessories to obtain an assembly with the maximum possible weight shall be subjected to the inspections specified in table IV. For connectors of the same family but with a smaller number of contacts, two plugs and receptacles for each connector with a smaller number of contacts shall be subjected to the inspections specified in table III. These samples shall be alternately equipped with available accessories (shields, clamps, jackscrews, etc.) so that each available feature is tested.

4.5.1.3 Contacts. One hundred and sixty (80 sets) plated and 20 unplated contacts shall be subjected to the inspection of table V groups I through IV, respectively, in the order shown.

4.5.2 Sample preparation.

4.5.2.1 Connectors. Connectors having crimp or solder type contacts shall be wired using number 22 AWG wire in accordance with SAE-AS22759/9 conforming to PIN M22759/9-22-*, for standard size contacts (see MIL-C-28731/20) and 26 AWG wire in accordance with SAE-AS22759/9 conforming to M22759/9-26-* for mini size contacts (see MIL-C-28731/35).

4.5.2.2 Contacts - crimp type. Contacts shall be crimped with a tool in accordance with MIL-C-22520/17 (see 3.4.2.2) to wire in accordance with SAE-AS22759/9. The wire size shall be in accordance with 4.5.2.1.

4.5.2.3 Contacts - solder type. Contacts shall be wired to wire in accordance with SAE-AS22759/9. The wire size shall be in accordance with 4.5.2.1.

4.5.2.4 Contacts - wrappost. Preparation not applicable, see 3.4.2.5.

TABLE IV. First article inspection - Connectors.

Inspection	Requirement paragraph	Test method paragraph	Conditions
Visual and mechanical inspection	3.1, 3.3, 3.4, through 3.4.5, 3.5, 3.7, and 3.8	4.7.1	All connectors
Permeability	3.3.3	---	All connectors
Insulation resistance	3.6.1	4.7.2	Unmated
Temperature cycling	3.6.2	4.7.3	Mated
Dielectric withstanding voltage	3.6.3	4.7.4	Unmated
Contact retention	3.6.4	4.7.5	Unmated
Vibration	3.6.5	4.7.6	Unmated
Mechanical shock	3.6.6	4.7.7	Mated
Mating and unmating forces	3.6.7	4.7.8	Mated or unmated
Humidity	3.6.8	4.7.9	Unmated
Durability	3.6.9	4.7.10	Mated or unmated
Salt spray	3.6.10	4.7.11	Mated
Contact resistance	3.6.11	4.7.12	Mated
Resistance to soldering heat 1/	3.6.16	4.7.16	Unmated

1/ For solder type terminations only.

TABLE V. First article inspection - contact test sequence.

Inspection	Requirement paragraph	Test method paragraph	Contact sample numbers									
			21-40 no. 26 or no. 30 AWG	1-20 no. 18 or no. 22 AWG	41-60 no. 18 or no. 22 AWG	61-80 no. 20 or no. 24 AWG	81-100 no. 22 or no. 26 AWG	101-120 no. 24 or no. 28 AWG	121-140 no. 26 or no. 30 AWG	141-150 no. 18 or no. 22 AWG	151-160 no. 26 or no. 30 AWG	1 - 20 unplated
Group I (180 contacts)												
Visual and mechanical inspection	3.1, 3.4 through 3.4.5, 3.7, and 3.8	4.7.1	X	X	X	X	X	X	X	X	X	X
Group II (20 sets)												
Salt spray (corrosion)	3.6.10	4.7.11		X								
Contact resistance	3.6.11	4.7.12		X								
Low level circuit resistance	3.6.15	4.7.15		X								
Visual and mechanical inspection	3.7	4.7.1								X	X	
Group III (50 sets)												
Contact separating forces (plated contacts)	3.6.14	4.7.14			X	X	X	X	X			
Crimp tensile strength 1/	3.6.12	4.7.13			X	X	X	X	X			
Crimp tensile strength 1/	3.6.13	4.7.13.1			X	X	X	X	X			
Group IV (20 contacts)												
Contact separating forces (unplated)	3.6.14	4.7.14										X

1/ Not applicable to solder type contacts.

NOTE: Wire size 18 through 26 AWG are used with contacts having a wire range of 18 to 26 AWG and wire sizes 22 through 30 AWG are used with contacts having a wire range of 22 to 30 AWG.

4.6 Conformance inspection.

4.6.1 Inspection of product for delivery. Inspection of product for delivery shall consist of table V (connectors), and table II (contacts).

4.6.1.1 Inspection lot. An inspection lot shall consist of all the connectors and associated fittings of the same PIN, produced under essentially the same conditions, and offered for inspection at one time.

4.7 Methods of inspection.

4.7.1 Visual and mechanical inspection. Connectors and associated fittings shall be inspected to verify that the design, construction, physical dimensions, interchangeability, marking, and workmanship are in accordance with the applicable requirements (see 3.1, 3.4 through 3.4.5 inclusive, 3.7, and 3.8).

4.7.2 Insulation resistance (see 3.6.1). The insulation resistance shall be measured between closest adjacent contacts and hardware in accordance with test procedure EIA-364-21. Any number of contacts may be tested simultaneously. The measurements shall be made with the contacts inserted into the molded insert. The test potential tolerance shall be 2 percent and the electrification time shall not exceed 1 minute.

4.7.3 Temperature cycling (see 3.6.2). Complete mated connectors shall be subjected to temperature cycling in accordance with test procedure EIA-364-32. The temperature shall be -55°C to 125°C.

4.7.4 Dielectric withstanding voltage (see 3.6.3). The unmated connectors shall be tested in accordance with test procedure EIA-364-20. The connectors shall show no evidence of flashover when the specified voltage (see 3.1) is applied. The voltage shall be applied between contacts and hardware as connected for insulation resistance (see 4.7.2).

4.7.5 Contact retention (see 3.6.4). Connectors shall be tested in accordance with test procedure EIA-364-29. Axial loads shall be applied to individual contacts in unmated connectors in the normal removal direction. The load shall be applied uniformly at a rate of 1 pound per second. After 5 insertions and withdrawals from the same contact hole, the contacts shall withstand the specified axial load.

4.7.6 Vibration (see 3.6.5). Complete mated connectors shall be vibrated in accordance with test procedure EIA-364-28, Condition II. All contacts shall be wired in series with the appropriate size wire and connected to a suitable testing circuit. The mated connectors shall be held together only by the normal locking device. Strain relief shall be provided by the use of junction shells when applicable. Wires shall be supported on a stationary frame not closer than 12 inches from the connectors.

4.7.7 Mechanical shock (see 3.6.6). Either high impact shock or specified pulse shock testing shall be performed as applicable.

4.7.7.1 High-impact shock. Complete mated connectors shall be tested in accordance with method 207 of MIL-STD-202. All contacts shall be wired in series with the appropriate size wire and 100 mA +10/ -0, current flowing through the test contacts. The mated connectors shall be held together only by the normal locking device. Strain relief shall be provided by the use of junction shells where applicable. Wires shall be supported on a stationary frame not closer than 12 inches from the connectors.

4.7.7.2 Specified pulse shock. Complete mated connectors shall be tested in accordance with test procedure EIA-364-27, Condition G. All contacts shall be wired in series with appropriate size wire and 100 mA +10/ -0 of current maximum flowing through the test contacts. Wires shall be supported on a stationary frame not closer than 12 inches from the connectors. The mated connectors shall be held together only by the normal locking device. Strain relief shall be provided by the use of junction shells, where applicable. There shall be 18 shocks, 3 in each direction in each of the three perpendicular planes.

4.7.8 Mating and unmating forces (connector assembly) (see 3.6.7). Connectors shall be tested in accordance with test procedure EIA-364-13. Each connector with shields removed, if applicable, and a full complement of contact shall be mated and unmated. The insertion and withdrawal force and torque, applied gradually, shall be measured after 3 cycles.

4.7.9 Humidity (see 3.6.8). Unmated plugs and receptacles shall be tested in accordance with test procedure EIA-364-31, Method IV; however, steps 7A and 7B are not required. No measurements are required after initial conditioning, nor voltage applied to connectors during exposure. After completion of step 6 of the final cycle, the connectors shall be removed from the chamber. Excess moisture shall be shaken off surfaces. No mechanical wiping or forced drying shall be used. After the test, the following measurements shall be taken:

a. Insulation resistance: Shall not be taken sooner than one-half and not later than 3 hours after removal from the chamber. If a measurement taken early in the specified time period results in a failure, the measurement may be taken once during the time period specified.

b. Dielectric withstanding voltage: See 4.7.4.

4.7.10 Durability (see 3.6.9). The complete connector assemblies shall be subjected to 200 cycles of insertion and withdrawal at a rate not to exceed 100 cycles per hour. Tests shall be conducted using normal engaging hardware. The insertion and withdrawals shall be accomplished similar to that which the connectors shall be subjected to in service. After 200 cycles, the plug and receptacle assemblies shall be inspected.

4.7.11 Salt spray (corrosion) (see 3.6.10). The mated plugs and receptacles, along with 20 pairs of contacts, mounted in accordance with figure 3, shall be tested in accordance with test procedure EIA-364-26 condition B. Immediately after exposure, the connectors shall be unmated and the exterior surfaces of the connectors and of the individual pairs of contacts shall be washed and dried for 12 hours maximum in a circulating air oven at a temperature of 38°C ±3°C (100°F ±5°F). After drying, the connectors shall be mated.

4.7.12 Contact resistance (see 3.6.11). Connectors shall be tested in accordance with test procedure EIA-364-06. The potential drop across each mated pair of contacts shall be measured at rated current as designated in table I. Potential drop readings shall be taken across the two points as shown on figure 4. For adapter to crimp contacts, figure 5 shall be used.

4.7.13 Crimp tensile strength (crimp contact) (see 3.6.12). The test shall be performed in accordance with test procedure EIA-364-08. Samples for test shall be placed in a standard tensile testing machine and the load applied at an approximate rate of 1 inch (25.4 mm) per minute to pull the wire out of the sample or break the wire sample (see table V).

4.7.13.1 Crimp tensile strength (adapter to crimp contact) (see 3.6.13). Provisions shall be made for mounting contacts in a suitable position of applying gradually increased loads during separation of the adapter and contact. Samples for test shall be placed in a standard tensile testing machine and the load applied at an approximate rate of 1 inch (25.4 mm) per minute to pull the adapter out of the contact.

4.7.14 Contact separating forces (contacts) (see 3.6.14). Provisions shall be made for mounting contacts in a suitable position of applying gradually increased loads during separation of the contact. The depth of the engagement shall be equal to the maximum length of the contact for the mating connector.

4.7.14.1 Contact separating forces (unplated contacts) (see 3.1). Separating forces of contacts when measured with the gauge shown on figure 6 shall be as specified.

4.7.14.2 Contact separating forces (plated contacts) (see 3.1). Separating forces of contacts when mated to each other shall be as specified.

4.7.15 Low level circuit resistance (contacts) (see 3.6.15). The low level circuit test shall be performed in accordance with test procedure EIA-364-23. For adapter to crimp contacts, figure 7 shall be used.

4.7.16 Resistance to soldering heat (see 3.6.16). All connectors with solder terminations shall be tested in accordance with MIL-STD-202, method 208 the following details shall apply:

a. The applicable wire size properly prepared shall be inserted into the contact termination. A minimum of seven contacts shall be tested.

b. An appropriately prepared resistance soldering iron with an appropriate tip shall be applied to the lower portion of the terminal configuration where the wire enters the termination.

c. The solder shall be applied in the normal manner.

d. The resistance soldering iron shall be applied to the system. The wattage shall be adjusted as to allow a proper solder fillet to be formed, or for a 4 second minimum time limit, whichever is more.

e. After application, the soldering iron shall be removed and a visual and mechanical inspection performed.

f. Visual inspection shall be a 1X, magnification. The connector shall show no evidence of distortion or damage to any area of the connector housing. The contact shall meet the contact retention requirements (see 4.7.5). The contact shall not interface with normal floating conditions as applicable and shall meet applicable location dimensions.

5. PACKAGING

5.1 Packaging. For acquisition purposes, the packaging requirements shall be as specified in the contract or order (see 6.2). When packaging of materiel is to be performed by DoD or in-house contractor personnel, these personnel need to contact the responsible packaging activity to ascertain packaging requirements. Packaging requirements are maintained by the Inventory Control Point's packaging activities within the Military Service or Defense Agency, or within the Military Service's system commands. Packaging data retrieval is available from the managing Military Department's or Defense Agency's automated packaging files, CD-ROM products, or by contacting the responsible packaging activity.

6. NOTES

(This section contains information of a general or explanatory nature that may be helpful, but is not mandatory.)

6.1 Intended use. Connectors and contacts covered by this specification are intended for use in airborne, ground support, and shipboard electrical and electronic equipment.

6.2 Acquisition requirements. Acquisition documents should specify the following:

a. Title, number, and date of this specification.

b. Packaging requirements (see 5.1).

c. Title, number, and date of the applicable specification sheet and the complete PIN (see 3.1).

d. Quantity of units per package, if other than one.

6.2.1 Removable contacts. Removable contacts are available for separate acquisition through specification sheets of this document (see 3.1).

6.3 First article. When first article inspection is required, the contracting officer should provide the specific guidance to offerors whether the items(s) should be a preproduction sample, a first article sample, a standard production item from the contractor's current inventory (see 4.5), and the number of items to be tested as specified in 4.5.1.1 or 4.5.1.3 as applicable. The contracting officer should also include specific instructions in acquisition documents regarding arrangements for examinations, approval, of first article test results, and disposition of first articles. Invitations for bids should provide that the government reserves the right to waive the requirement for samples for first article inspection to those bidders offering a product which has been previously acquired or tested by the Government, and that bidders offering such products, who wish to rely on such production or test, must furnish evidence with the bid that prior Government approval is presently appropriate for the pending contract. Bidders should not submit alternate bids unless specifically requested to do so in the solicitation.

6.4 Definitions. For purposes of this specification, the following definitions apply:

6.4.1 Connector assembly. A complete connector assembly consists of a mated plug and receptacle.

6.4.2 Receptacle. A connector receptacle is that portion of the connector assembly which is normally "fixed" that is rigidly attached to a supporting surface.

6.4.3 Plug. A connector plug is that portion of the connector assembly, which is normally "removable".

6.5 Patent notice. Patent No. 3,248,686 owned by Elco Corporation. The Government has a royalty-free license under the above patent for the benefit of manufacturers of the items called for in this specification, either for the Government or for use in equipment to be delivered to the Government.

6.5.1 Copyright notice. Any portions of this specification and related documents, which may be covered by copyrights owned by Elco Corporation, are reprinted with the express permission of said copyright owner.

6.6 Subject term (keyword listing).

Cadmium
Crimp
Current
Dielectric
Finish
Heat
Humidity
Inspection
Lead
Material
Nickel
Socket

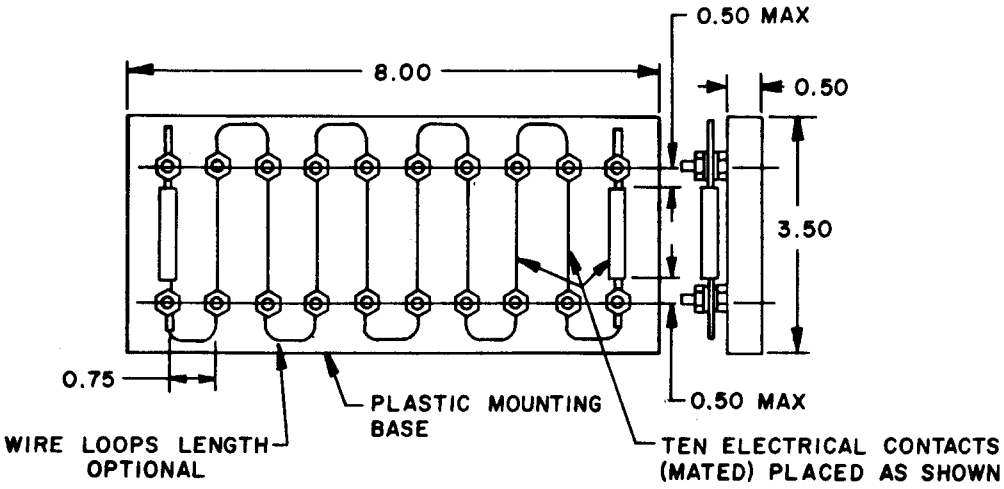

Inches	mm
.50	12.70
.75	19.05
3.50	88.90
8.00	203.20

FIGURE 3. Salt spray contacts.

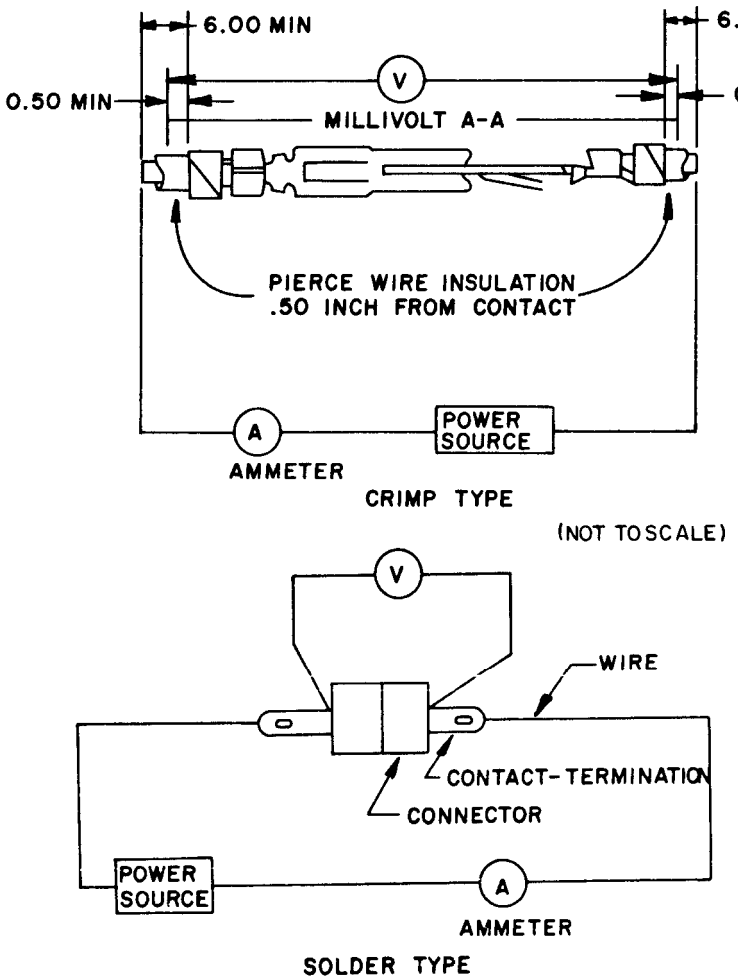

Inches	mm
.05	1.27
.50	12.7
6.00	152.4

FIGURE 4. Contact resistance.

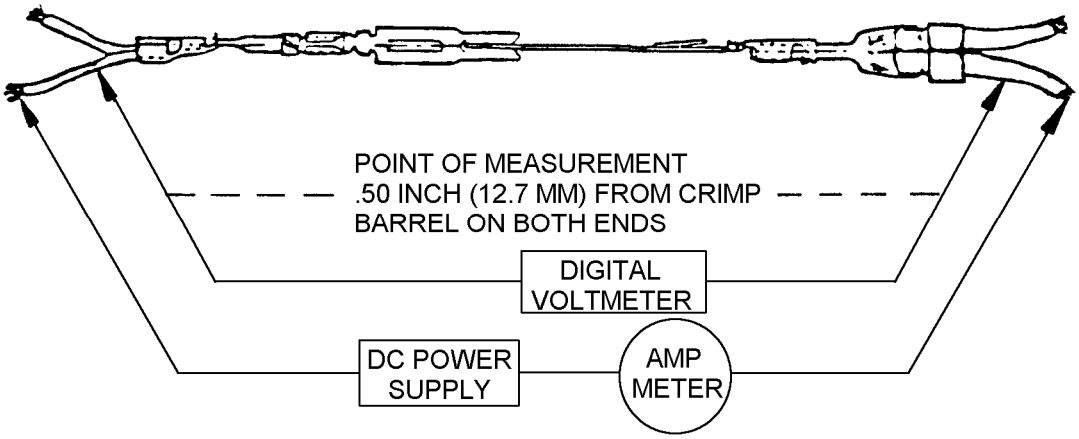

FIGURE 5. Contact crimp resistance.

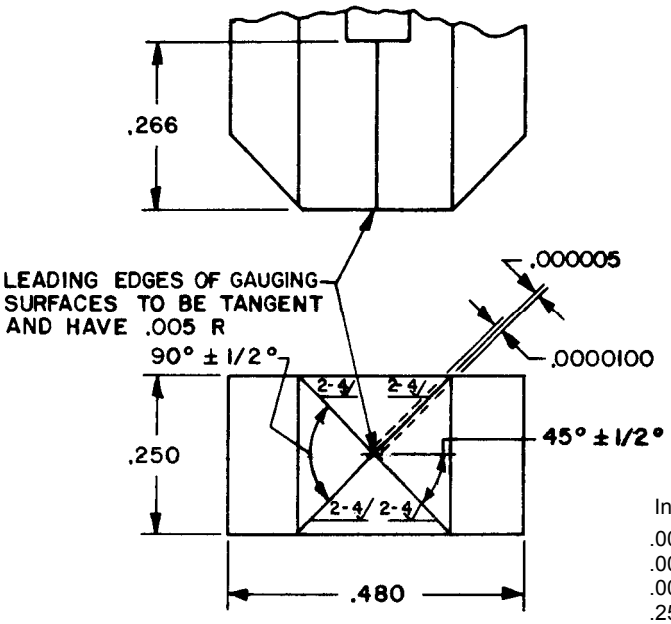

Inches	mm
.0000050	0.000127
.0000100	0.000254
.005	0.13
.250	6.35
.266	6.76
.480	12.19

FIGURE 6. Gauge tip, test fixture, contact separation for.

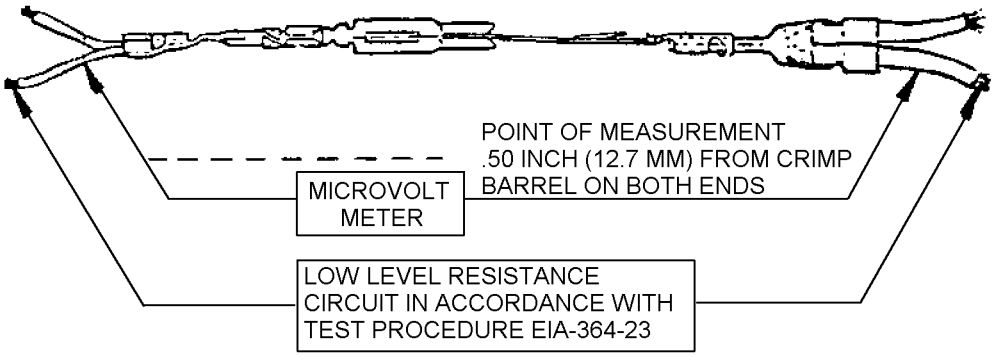

FIGURE 7. Low level circuit resistance.

6.7 Environmentally preferable material. Environmentally preferable materials should be used to the maximum extent possible that the material meets or exceeds the operational and maintenance requirements, and promotes economically advantageous life cycle costs. Table VI lists the Environmental Protection Agency (EPA) top seventeen hazardous materials targeted for major usage reduction. If any of these hazardous materials are required, it is recommended that it be used only when other materials cannot meet performance requirements.

TABLE VI. EPA top seventeen hazardous materials.

Benzene	Dichloromethane	Tetrachloroethylene
Cadmium and compounds	Lead and compounds	Toluene
Carbon Tetrachloride	Mercury and compounds	1,1,1 - Trichloroethane
Chloroform	Methyl Ethyl compounds	Trichloroethylene
Chromium and compounds	Methyl Isobutyl Ketone	Xylenes
Cyanide and compounds	Nickel and compounds	

6.8 Changes from previous issues. The margins of this specification are marked with vertical lines to indicate where changes from the previous issue were made. This was done as a convenience only and the Government assumes no liability whatsoever for any inaccuracies in these notations. Bidders and contractors are cautioned to evaluate the requirements of this document based on the entire content irrespective of the marginal notations and relationship to the last previous issue.

CONCLUDING MATERIAL

Custodians:
Army - CR
Navy - EC
Air Force - 11
DLA - CC

Review activities:
Army - AR, AT, MI
Navy - AS, OS, SH
Air Force - 99

Preparing activity:
DLA - CC

(Project 5935-2005-055)

NOTE: The activities listed above were interested in this document as of the date of this document. Since organizations and responsibilities can change, you should verify the currency of the information above using the ASSIST Online database at http://assist.daps.dla.mil.