INCH-POUND
MIL-DTL-287J
10 April 2012
SUPERSEDING
MIL-DTL-287H
28 September 2007

DETAIL SPECIFICATION

WAVEGUIDE ASSEMBLIES, FLEXIBLE, TWISTABLE AND NON-TWISTABLE, GENERAL SPECIFICATION FOR

This specification is approved for use by all Departments and Agencies of the Department of Defense.

1. SCOPE

1.1 Scope. This specification covers the general requirements for twistable and non-twistable, flexible waveguide assemblies (hereinafter referred to as "assemblies") (see 6.1).

1.2 Classification. Assemblies consist of the following classes, as specified (see 3.1 and 6.5.1):

Class		Performance characteristics
1	-	Twistable (mates with rigid rectangular waveguide components).
2	-	Non-twistable (mates with rigid rectangular waveguide components).
3	-	Extra-flexible, twistable (mates with rigid rectangular waveguide components).

1.2.1 Part or Identifying Number (PIN). The military PIN consists of the letter "M" followed by the basic number of the specification sheet, an assigned dash number (see 3.1), and a coded four-digit number indicating the length.

M287/1	-01-	0071
Military designator and specification sheet number	Dash number	Length (in inches) (see NOTE)

NOTE: The four digits indicate the nominal relaxed length of the assembly based on the requirements of 3.4.4. Example: "-0071" is the number used to identify a length of 7.50 inches (190.5 mm).

2. APPLICABLE DOCUMENTS

2.1 General. The documents listed in this section are specified in sections 3 and 4 of this specification. This section does not include documents cited in other sections of this specification or recommended for additional information or as examples. While every effort has been made to ensure the completeness of this list, document users are cautioned that they must meet all specified requirements of documents cited in sections 3 and 4 of this specification, whether or not they are listed.

2.2 Government documents.

2.2.1 Specifications and standards. The following specifications, standards, and handbooks form a part of this document to the extent specified herein. Unless otherwise specified, the issues of these documents are those cited in the solicitation or contract.

Comments, suggestions or questions on this document should be addressed to DLA Land and Maritime, ATTN: VAT, Post Office Box 3990, Columbus, OH 43218-3990, or emailed to Tubesamps@dla.mil. Since contact information can change, you may want to verify the currency of this address information using the ASSIST Online database at https://assist.daps.dla.mil.

COMMERCIAL ITEM DESCRIPTIONS

A-A-59588	-	Rubber, Silicone.

DEPARTMENT OF DEFENSE SPECIFICATIONS

MIL-DTL-85	-	Waveguides, Rigid, Rectangular, General Specification for.
MIL-DTL-3922	-	Flanges Waveguide, General Purpose, General Specification for.
MIL-DTL-5541	-	Chemical Conversion Coatings on Aluminum and Aluminum Alloys.

DEPARTMENT OF DEFENSE STANDARDS

MIL-STD-202	-	Electronic and Electrical Component Parts.

(Copies of these documents are available online at https://assist.daps.dla.mil/quicksearch or from the Standardization Document Order Desk, 700 Robbins Avenue, Building 4D, Philadelphia, PA 19111-5094.)

2.3 Non-Government publications. The following documents form a part of this document to the extent specified herein. Unless otherwise specified, the issues of these documents are those cited in the solicitation or contract.

ASTM INTERNATIONAL AMERICAN SOCIETY FOR TESTING AND MATERIALS (ASTM)

ASTM-B700	-	Electrodeposited Coatings of Silver for Engineering Use.

(ASTM publications are available from ASTM International, 100 Barr Harbor Drive, West Conshohocken, PA 19428-2959 or online from http://astm.org.)

NATIONAL CONFERENCE OF STANDARDS LABORATORIES (NCSL)

NCSL-Z540.3	-	Calibration of Measuring and Test Equipment, Requirements for.

(Copies are available online at http://www.ncsl.org or at National Conference of Standards Laboratories, 2995 Wilderness Place, Suite 107, Boulder, CO 80301-5404.)

SAE INTERNATIONAL (SAE) AEROSPACE MATERIALS SPECIFICATIONS (AMS)

SAE-AMS-S-8802	-	Sealing Compound, Temperature Resistant, Integral Fuel Tanks and Fuel Cell Cavities, High Adhesion.
SAE-AMS-R-25988	-	Rubber, Fluorosilicone Elastomer, Oil-and-Fuel-Resistant, Sheets, Strips, Molded Parts, and Extruded Shapes.

(Copies are available from SAE International, 400 Commonwealth Drive, Warrendale, PA 15096-0001, or online from http://www.sae.org.)

2.4 Order of precedence. Unless otherwise noted herein or in the contract, in the event of a conflict between the text of this document and the references cited herein (except for related specification sheets), the text of this document takes precedence. Nothing in this document, however, supersedes applicable laws and regulations unless a specific exemption has been obtained.

3. REQUIREMENTS

3.1 Specification sheets. The individual item requirements shall be as specified herein and in accordance with the applicable specification sheets. In the event of any conflict between the requirements of this specification and of the specification sheets, the latter shall govern.

3.2 First article. Assemblies furnished under this specification shall be products that have been tested and passed first article inspection (see 4.5 and 6.4).

3.3 Materials. Materials shall be as specified herein (see 3.1); however, when a definite material is not specified, a material shall be used, with acquiring activity approval, which will enable the assemblies to meet the performance requirements of this specification. Acceptance or approval of any constituent material shall not be construed as a guaranty of acceptance of the finished product (see 4.7.1).

3.3.1 Flange. The material for the assembly flange shall be selected from the material of MIL-DTL-3922.

3.3.2 Jacket (when applicable). Unless otherwise specified (see 3.1), the jacket material shall be in accordance with 3.3.2.1, 3.3.2.2, 3.3.2.3 or 3.3.2.4.

3.3.2.1 Neoprene. Neoprene jackets shall be molded at least .0625 inch (1.588 mm) thick.

3.3.2.2 Plastic. Plastic jackets shall be fabricated from sealing compound in accordance with SAE-AMS-S-8802, suitable for brush application with a minimum of 0.5 to 2 hours application time.

3.3.2.3 Silicone rubber. Silicone rubber jackets shall be in accordance with A-A-59588, class 2a.

3.3.2.4 Fluorosilicone rubber. Fluorosilicone rubber jackets shall be in accordance with SAE-AMS-R-25988.

3.3.3 Dissimilar metals. Unless suitably protected against electrolytic corrosion, dissimilar metals shall not be used in intimate contact with each other (see 6.5.10).

3.3.4 Pure tin. The use of pure tin, as an underplate or final finish, is prohibited both internally and externally. Tin content of rigid waveguide assembly components and solder shall not exceed 97 percent, by mass. Tin shall be alloyed with a minimum of 3 percent lead, by mass (see 6.10).

3.4 Interface and dimensions. Assemblies shall be of design, interface and physical dimensions specified (see 3.1, 4.7.1).

3.4.1 Flange. All assemblies shall be terminated by flanges. Unless otherwise specified (see 3.1), the flange shall mate electrically and mechanically with flanges covered by MIL-DTL-3922. The flange face shall make an angle of 90° ± 15' with the E-plane and the H-plane of the internal surfaces of the assembly. The finish for the flanges shall be as specified herein (see 3.4.3, 3.4.3.1 and 3.4.3.2 for approved finishes). Alternative finishes may be used, with acquiring activity approval, provided they permit flanges to meet the performance requirements of this specification. Acceptance or approval of any alternative finish shall not be construed as guaranty of acceptance of the finished product (see 4.7.1). The optional use of “butt” type flanges is permitted.

3.4.2 Flexible waveguides. The physical dimensions of flexible waveguides shall be such that the operating frequency range is equal to that of the mating rigid waveguides of MIL-DTL-85. Surface finishes of flexible waveguides shall be as specified herein (see 3.4.3 and 3.4.3.3 for approved finishes). Alternative finishes may be used, with acquiring activity approval, provided they permit flexible waveguides to meet the performance requirements of this specification. Acceptance or approval of any alternative finish shall not be construed as a guaranty of acceptance of the finished product (see 4.7.1).

3.4.3 Assembly finish. Specified finish shall be applied after assembly of flanges to flexible waveguides. Approved surface finishes for flanges and for flexible waveguides shall be specified in 3.4.3.1 through 3.4.3.3. Equivalent finishes meeting the requirements of this specification may be used with acquiring activity approval.

3.4.3.1 Finish for copper alloy flanges. Unless otherwise specified (see 3.1), all copper alloy flanges shall be silver plated at least .0003-inch (0.008 mm) thick in accordance with ASTM-B700, with supplementary tarnish-resistant treatment (chromate treatment).

3.4.3.2 Finish for aluminum alloy flanges. Unless otherwise specified (see 3.1), all aluminum or aluminum alloy flanges which are used with copper alloy, OFHC copper, or beryllium copper flexible waveguides shall be copper or electroless or electrolytic nickel plated in the recess of the flange or where the waveguide interfaces with the flange. After the waveguide and flange are soldered or brazed together, the solder point and flange shall be chemically treated in accordance with MIL-DTL-5541 or equivalent.

3.4.3.3 Flexible waveguide finish. With the exception of OFHC, all copper alloy, or beryllium copper flexible waveguides, internal surfaces shall be silver plated in accordance with ASTM-B700, with supplementary tarnish-resistant treatment (chromate treatment), at least .0003-inch (0.008 mm) thick. OFHC copper shall be chemically treated with copper iridite; all aluminum or aluminum alloy flexible waveguide surfaces shall be chemically treated in accordance with MIL-DTL-5541.

3.4.4 Assembly length. The nominal relaxed length of an assembly shall be measured from the face of one flange to the face of the other and shall be measured in inches and halves of an inch. Assembly length tolerances shall be in accordance with table I.

TABLE I. Length tolerance.

Assembly length (Inches)	Tolerance (Inch)
Up to 36, inclusive	± .090 (2.29 mm)
Over 36 and up to 72, inclusive	± .125 (3.18 mm)
Over 72	± .250 (6.35 mm)

For indicating the length in the military part number (see 6.6), the following shall apply:

a. When the required length is less than 10 inches (254 mm), the number shall be preceded by 2 zeros.

b. When the required length is from 10 to 100 inches (2540 mm), the number shall be preceded by 1 zero.

3.5 Performance requirements.

3.5.1 Insertion loss. When assemblies are tested as specified in 4.7.2, the insertion loss shall not exceed the value specified (see 3.1).

3.5.2 Stability of insertion loss. When assemblies are tested as specified in 4.7.3, the maximum insertion loss shall not exceed the value specified (see 3.1) by more than 25 percent.

3.5.3 Voltage standing wave ratio (VSWR). When assemblies are tested as specified in 4.7.4, the VSWR shall not exceed the value specified (see 3.1).

3.5.4 Pressurization. When assemblies are tested as specified in 4.7.5, there shall be no leakage or, when applicable, loss of adherence of the jacket. Following this test, the stability of insertion loss and VSWR shall be as specified in 3.5.2 and 3.5.3, respectively.

3.5.5 Cold bending. When assemblies are tested as specified in 4.7.6, there shall be no checks, cracks, fractures or other flaws in the jacket or metal structure, as applicable. Following this test, pressurization shall be as specified in 3.5.4.

3.5.6 Vibration, high frequency. When assemblies are tested as specified in 4.7.7, there shall be no mechanical damage to the jacket or the metal structure, as applicable. Following this test, the insertion loss and VSWR shall be as specified in 3.5.1 and in 3.5.3, respectively.

3.5.7 Retention. When assemblies are tested as specified in 4.7.8, to the force specified (see 3.1), there shall be no physical damage to the assembly. The length of the assembly shall not change by more than .060 inch (1.54 mm) per foot of assembly length (see 3.4.4). Following this test, the VSWR and pressurization shall be as specified in 3.5.3 and 3.5.4, respectively.

3.5.8 Shock. When assemblies are tested as specified in 4.7.9, there shall be no physical damage to the assembly. Following this test, the insertion loss and VSWR shall be as specified in 3.5.1 and in 3.5.3, respectively.

3.5.9 Salt Atmosphere (Corrosion). When assemblies are tested as specified in 4.7.10, there shall be no evidence of destructive corrosion and the insertion loss, stability of insertion loss, and VSWR shall be as specified in 3.5.1, 3.5.2, and 3.5.3, respectively. Destructive corrosion shall be construed as any type of corrosion which in any way interferes with mechanical or electrical performance.

3.5.10 Moisture resistance. When assemblies are tested as specified in 4.7.11, there shall be no evidence of cracking or, if applicable, separation of the jacket. Following this test, insertion loss, stability of insertion loss and VSWR shall be as specified in 3.5.1, 3.5.2 and 3.5.3, respectively.

3.5.11 Thermal shock. When assemblies are tested as specified in 4.7.12, there shall be no evidence of cracking or, if applicable, separation of the jacket. Following this test, pressurization, insertion loss and VSWR shall be as specified in 3.5.4, 3.5.1, and 3.5.3, respectively.

3.5.12 Power handling capability (when specified). When assemblies are tested as specified in 4.7.13, there shall be no cracks, fractures or other flaws in the jacket or metal structure, as applicable (see 3.1). After this test, the insertion loss and VSWR shall be as specified in 3.5.1 and in 3.5.3, respectively.

3.5.13 Bending test. When assemblies are tested as specified in 4.7.14, there shall be no mechanical damage. After this test the measured stability of insertion loss and VSWR shall be as specified in 3.5.2 and in 3.5.3, respectively.

3.5.14 Flexure. When assemblies are tested as specified in 4.7.15, there shall be no mechanical damage. After this test the measured stability of insertion loss and VSWR shall be as specified in 3.5.2 and in 3.5.3, respectively.

3.5.15 Axial twist (applicable only to twistable type). When assemblies are tested as specified in 4.7.16, there shall be no mechanical damage. After this test the measured stability of insertion loss and VSWR shall be as specified in 3.5.2 and in 3.5.3, respectively.

3.5.16 Repeated twist (applicable only to twistable type). When assemblies are tested as specified in 4.7.17, there shall be no mechanical damage. After this test the measured stability of insertion loss and VSWR shall be as specified in 3.5.2 and in 3.5.3, respectively.

3.6 Marking (see 4.7.1). Assemblies are to be marked in accordance with MIL-STD-1285, method I, on the external surface, with the military PIN (see 3.1), and the manufacturer's source code. Marking characters are to be approximately .125 inch (3.18 mm) in height for assemblies covering frequencies up to 26.5 GHz and approximately .0625 inch (1.588 mm) in height for assemblies covering frequencies above 26.5 GHz. The manufacturer's name or trademark may also be marked on the assembly provided such letters are not expressly forbidden in the contract or purchase order. The preferred and permissible marking is as follows:

Preferred:	Military PIN:	M287/1-XX-XXX	Permissible:	M287/1-XXX-XXXX
	Manufacturer's source code:		ZZZZZ	ZZZZZ

3.7 Recycled, recovered, or environmentally preferable materials. Recycled, recovered, or environmentally preferable materials should be used to the maximum extent possible provided that the material meets or exceeds the operational and maintenance requirements, and promotes economically advantageous life cycle costs. All components supplied shall be new and unused.

3.8 Workmanship. Assemblies shall be manufactured in such a manner as to be uniform in quality, and the assembly shall be free from tool marks, burrs, scratches, pits, corrosion, cracks, rough edges, chips and other defects that will affect life, serviceability or appearance (see 4.7.1).

4. VERIFICATION

4.1 Test equipment and inspection facilities. Test and measuring equipment and inspection facilities of sufficient accuracy and quantity to permit performance of the required inspection shall be established and maintained by the manufacturer. The establishment and maintenance of a calibration system to control the accuracy of the measuring and test equipment shall be in accordance with NCSL-Z540.3.

4.2 Classification of inspections. The inspection requirements specified herein are classified as follows:

a. Materials inspection (see 4.3).

b. First article inspection (see 4.5).

c. Conformance inspection (see 4.6).

4.3 Materials inspection. Materials inspection shall consist of certification supported by verifying data that the materials (see 3.3) used in fabricating the assembly are in accordance with the applicable referenced specifications or requirements prior to such fabrication.

4.4 Inspection conditions. Unless otherwise specified herein, all inspections shall be performed in accordance with the test conditions specified in the "GENERAL REQUIREMENTS" of MIL-STD-202.

4.5 First article inspection. First article inspection shall be performed by the manufacturer after award of contract and prior to production, at a location acceptable to the Government on sample units produced with equipment and procedures normally used in production. This inspection consists of meeting all requirements of table II and of 4.5.1 through 4.5.4. First article approval is valid only on the contract or purchase order under which it is granted.

TABLE II. First article inspection.

Inspection	Requirement paragraph	Method paragraph
Group I (all sample units)		
Visual and mechanical examination	3.1, 3.3 through 3.4.4, 3.7 and 6.6	4.7.1
Insertion loss		
Voltage standing wave ratio (VSWR)	3.5.1 3.5.3	4.7.2 4.7.4
Group II (2 sample units)		
Stability of insertion loss	3.5.2	4.7.3
Pressurization	3.5.4	4.7.5
Cold bending	3.5.5	4.7.6
Vibration, high frequency	3.5.6	4.7.7
Retention	3.5.7	4.7.8
Shock	3.5.8	4.7.9
Salt Atmosphere (Corrosion)	3.5.9	4.7.10
Moisture resistance	3.5.10	4.7.11
Thermal shock	3.5.11	4.7.12
Power handling capability 1/	3.5.12	4.7.13
Group III (2 sample units)		
Bending test	3.5.13	4.7.14
Flexure	3.5.14	4.7.15
Axial twist 2/	3.5.15	4.7.16
Repeated twist 2/	3.5.16	4.7.17
Pressurization	3.5.4	4.7.5

1/ When specified (see 3.1).
2/ For twistable type only.

4.5.1 Sample size. Four assemblies covered by each specification sheet, for which production approval is sought, shall be subjected to first article inspection.

4.5.2 Inspection routine. Sample units shall be subjected to inspection/test requirements specified in table II, in the order shown.

4.5.3 Failures. One or more failures by the manufacturer shall be cause for refusal of production assemblies from the specification sheet(s) failed.

4.5.4 Disposition of first article sample units. Sample units subjected to first article testing shall not be delivered on any contract or purchase order. The Government reserves the right to retain sample units or to require the manufacturer to furnish the sample units.

4.5.5 First article approval by similarity. Waveguide assemblies of similar classification (see 3.1) manufactured on the same production line involving the same process, may be granted first article approval by the acquiring activity provided the manufacturer already has a waveguide assembly of equal or greater complexity with current first article approval.

4.6 Conformance inspection.

4.6.1 Inspection of product for delivery. Inspection of product for delivery shall consist of group A and group B inspection.

4.6.1.1 Inspection lot. An inspection lot shall consist of all assemblies of the same military PIN produced under essentially the same condition, and offered for inspection at one time.

4.6.1.2 Group A inspection. Group A inspection shall consist of the inspections specified in table III, in the order shown.

TABLE III. Group A inspection.

Inspection	Requirement paragraph	Test method paragraph
Visual and mechanical	3.1, 3.3 through 3.4.4, 3.7 and 6.6	4.7.1
Insertion loss	3.5.1	4.7.2
Voltage standing wave ratio (VSWR)	3.5.3	4.7.4
Pressurization	3.5.4	4.7.5

4.6.1.2.1 Sampling plan. All units shall be subjected to group A inspection. No failures are allowed. If one or more sample units fail, the inspection lot shall be considered to have failed.

4.6.1.2.2 Rejected lots (group A inspection). If an inspection lot is rejected, the contractor may rework it to correct the defects or screen out the defective units, and resubmit for inspection. Such lots shall be separate from new lots and shall be clearly identified as re-inspected lots.

4.6.1.3 Group B inspection. Group B inspection shall consist of the tests specified in table IV, in the order shown, and shall be made on units which have been subjected to and have passed group A inspection.

TABLE IV. Group B inspection.

Test	Requirement paragraph	Method paragraph
Retention	3.5.7	4.7.8
Bending test	3.5.13	4.7.14
Flexure	3.5.14	4.7.15
Axial twist (applicable only to twistable type)	3.5.15	4.7.16
Repeated twist (applicable only to twistable type one-way twisting)	3.5.16	4.7.17

4.6.1.3.1 Sampling plan (group B inspection). The sampling plan shall be as specified in table V.

TABLE V. Group B sampling plan.

Quantity	Units tested
1 - 5	0 1/
6 - 50	1
51 - 99	2
100 and greater	2 %

1/ After three consecutive buys of five units or less over a period of 18 months, at least one unit shall be subjected to group B inspection on the fourth buy.

4.6.1.3.2 Rejected lots (group B inspection). If an inspection lot is rejected, the contractor may rework it to correct the defects, or screen out the defective units, and resubmit for inspection. Such lots shall be separate from new lots, and shall be clearly identified as re-inspected lots.

4.6.1.3.3 Disposition of sample units. Sample units which have been subjected to group B inspection shall not be delivered on the contract or purchase order.

4.7 Methods of inspection.

4.7.1 Visual and mechanical examination. Assemblies shall be examined to verify that the materials, design, interface, physical dimensions, finish, marking, and workmanship are in accordance with the applicable requirements (see 3.1, 3.3 through 3.4.4, 3.7 and 6.6).

4.7.2 Insertion loss. The insertion loss of the assembly shall be measured over the specified frequency range (see 3.1 and 3.5.1), using the test setup of figure 1 or equivalent. If the test must be made at fixed frequencies, the test shall be made at not less than 10 equally spaced points evenly distributed across the frequency range of the assemblies (see 3.1). The test equipment(s) shall be capable of providing a continuous measurement of insertion loss over the required frequency ranges. A means shall be provided for producing a permanent record of the assembly's insertion loss versus frequency. The permanent record of each assembly shall be packaged with the unit when shipped. The measured system and permanent record shall provide a minimum accuracy of 0.02 dB over the frequency ranges 1.12 through 2.6 GHz and above 26.5 GHz and 0.01 dB over the frequency ranges 2.6 through 26.5 GHz.

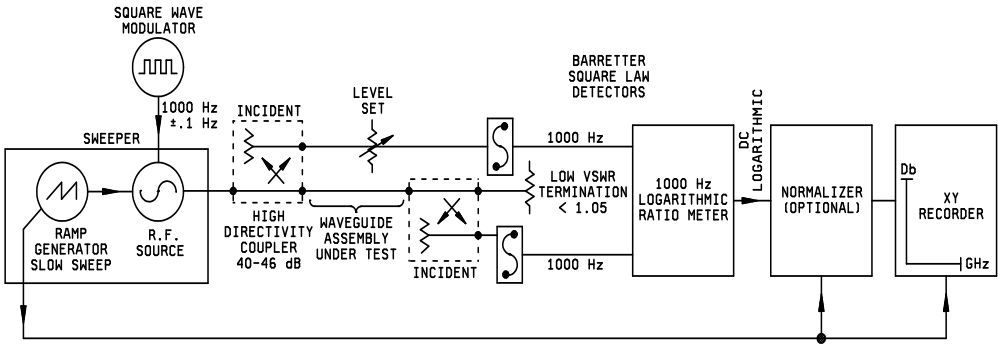

FIGURE 1. Insertion loss test setup.

4.7.3 Stability of insertion loss. Stability of insertion loss (see 3.5.2) shall be determined by measuring insertion loss, as specified in 4.7.2, during the time the assembly is being deformed to the bending angle specified (see 3.1 and 3.5.13). When repeated twist is specified (see 3.1), the assembly shall be slowly twisted, either clockwise or counterclockwise, whichever is the lower, to an average angle equal to the value specified (see 3.1). A record shall be made of the maximum insertion loss observed for any deformed position. The permanent record of each assembly shall be packaged with the unit when shipped.

4.7.4 VSWR. The VSWR of the assembly shall be measured over the specified frequency range and length (see 3.1 and 3.5.3), using the test setup of figure 2 (see reference "Precision Coaxial VSWR Measurements By Coupled Sliding-Load Technique," by B.O. Weinschel, pp. 292-300, Dec. 1964, IEEE Transactions on Instrumentation and Measurement.) If the test must be made at fixed frequencies, the test shall be made at not less than 10 equally spaced points evenly distributed across the frequency range of the assemblies (see 3.1). The test equipment(s) shall be capable of providing a continuous measurement of VSWR over the required frequency ranges. A means shall be provided for producing a permanent record of the assembly's VSWR versus frequency. If VSWR is not directly measured; that is, if return loss is measured and VSWR is calculated from that measurement, the permanent record shall indicate the worst case VSWR numerically for each frequency band and shall provide the calculation used to obtain the calculated VSWR. The permanent record of each assembly shall be packaged with the unit when shipped. The measurement system and permanent record shall provide a minimum accuracy of 0.01 over the frequency ranges below 26.5 GHz and a minimum accuracy of 0.02 over the frequency ranges 26.5 GHz and above. The length of the assembly to be used for the VSWR measurements shall be as specified in 4.7.4.1 or in 4.7.4.2, as applicable.

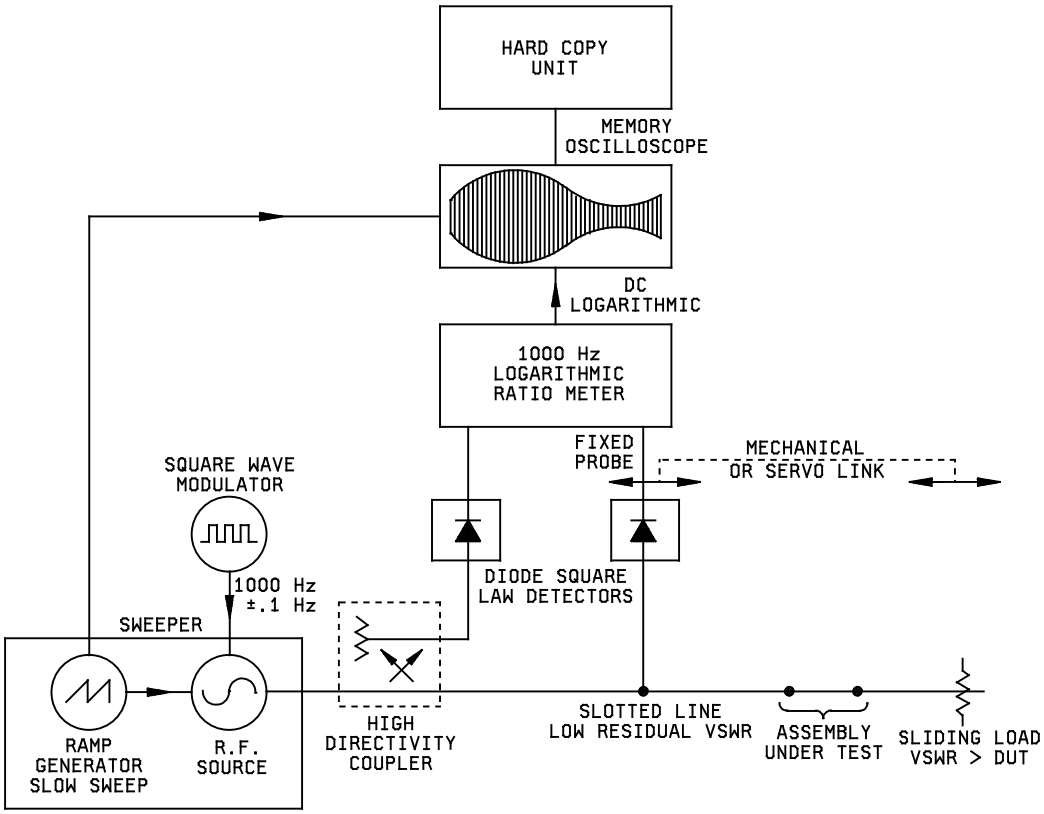

FIGURE 2. VSWR test using coupled sliding load.

4.7.4.1 For first article inspection. For assemblies that operate up to 12.4 GHz inclusive, the lengths shall be 12 inches (305 mm) and 24 inches (610 mm). For assemblies that operate above 12.4 GHz and through 26.5 GHz, the lengths shall be 6 inches (152 mm) and 12 inches (305 mm). For assemblies that operate above 26.5 GHz, the lengths shall be 1 inch (25 mm) and 2-1/4 inches (63 mm).

4.7.4.2 For Group A inspection. The VSWR measurements under group A inspection shall be performed on the actual length that is being acquired.

4.7.5 Pressurization. The assembly shall be subjected to the internal air pressure in pounds force per square inch gauge (lb_f/in^2) specified (see 3.1 and 3.5.4), while immersed in water. The longitudinal axis of the assembly shall be nominally parallel to the surface of the water, and the uppermost portion of the assembly shall not be less than 6 inches (152 mm) and not more than 12 inches (305 mm) below the surface. The temperature of the water shall be 20° ± 5° C. Any bubbles coming from within the assembly shall be considered as leakage. Bubbles which are the result of entrapped air on the exterior parts of the assembly shall not be considered as leaks. The stability of insertion loss and VSWR shall be measured while under pressure as specified in 4.7.3 and in 4.7.4, respectively. The unit does not have to be immersed in water during insertion loss and VSWR tests. Any areas of non-adherence of the jacket (if applicable) should be noted after the assembly has been under the pressure for 5 minutes. Ridges in the rubber that show under pressure are to be discounted, and, in general, non-adherent areas .125-inch (3.18 mm) square or smaller may be disregarded. In case of doubt, any non-adherent area which does not visibly increase in size when the assembly is subjected to the applicable pressure for 24 hours will be acceptable.

4.7.6 Cold-bending. Unless otherwise specified, the assembly shall be placed in an oven at a temperature of 100° ± 2° C, (see 3.1 and 3.5.5), for a period of 7 days. At the end of this period, the assembly shall be cooled to room temperature (approximately 20°C) for a period of 2 hours. Unless otherwise specified (see 3.1), the assembly shall then be placed in a cold chamber at a temperature of -55° ± 5° C for a period of 20 hours. The assembly shall then be bent three times as specified in 4.7.15 at a rate not to exceed 5 degrees per second, first in one direction and then in the other, at the temperature of the chamber. The assembly shall then be moved from the chamber and examined for checks, cracks, fractures, or other flaws in the jacket or metal structure, as applicable. The assembly shall then be subjected to the pressurization test specified in 4.7.5 as a means of determining the mechanical uniformity of the assembly after it has been brought back to room temperature.

4.7.7 Vibration, high frequency. Assemblies shall be tested in accordance with MIL-STD-202, method 204 (see 3.5.6). The following details shall apply:

a. Mounting: Unless otherwise specified (see 3.1), rigidly mounted by flanges only to an appropriate non-resonant mounting table.

b. Electrical load: Not applicable.

c. Test condition letter: A.

d. Resonance: Not applicable.

e. Measurements after vibration: Insertion loss and VSWR shall be measured as specified in 4.7.2 and 4.7.4, respectively.

4.7.8 Retention. Both flanges of the assembly shall be subjected to the retention test (see 3.5.7). The flange under test shall be secured to a stationary plate and the specified force (see 3.1) shall be applied in a straight line pull between the flange under test and the remaining flange. Spring scales or other appropriate means of measuring mechanical force shall be used to measure the applied force. Force measurement instruments shall be accurate within 0.5 lb_f. The force shall be gradually applied, held for 10 seconds, and released. The cycle shall be repeated four additional times. Following the test, pressurization and VSWR shall be measured as specified in 4.7.5 and in 4.7.4, respectively.

4.7.9 Shock . Assemblies shall be tested in accordance with MIL-STD-202, method 213 (see 3.5.8). The following details shall apply:

a. Mounting: Unless otherwise specified (see 3.1), rigidly mounted by flanges only to test platform.

b. Test condition letter: G.

c. Measurements after shock: Insertion loss and VSWR shall be measured as specified in 4.7.2 and in 4.7.4, respectively.

4.7.10 Salt Atmosphere (Corrosion). Assemblies shall be tested in accordance with MIL-STD-202, method 101 (see 3.5.9). The waveguide ends should be capped prior to this test. The following details shall apply:

a. Special mounting: Not applicable.

b. Test condition letter: B.

c. Measurements after exposure: Insertion loss, stability of insertion loss, and VSWR shall be measured as specified in 4.7.2, 4.7.3, and 4.7.4, respectively. The assembly shall be visually examined for evidence of destructive corrosion.

4.7.11 Moisture resistance. Assemblies shall be tested in accordance with MIL-STD-202, method 106 (see 3.5.10). The following details shall apply:

a. Initial measurement: Not applicable.

b. Polarization voltage: Not applicable.

c. Loading voltage: Not applicable.

d. Measurements after test: Insertion loss, stability of insertion loss, and VSWR shall be measured as specified in 4.7.2, 4.7.3, and 4.7.4, respectively.

4.7.12 Thermal shock. Assemblies shall be tested in accordance with MIL-STD-202, method 107 (see 3.5.11). The following details and exception shall apply:

a. Special mounting: Not applicable.

b. Test condition letter: A.

c. Measurements before test: Not applicable.

d. Measurements after test: Pressurization, insertion loss, and VSWR shall be measured as specified in 4.7.5, 4.7.2, and 4.7.4, respectively.

4.7.13 Power handling capability (when specified, see 3.1). Assemblies shall be subjected to the RF power level specified (see 3.1) at the frequency, simulated altitude and temperature specified (see 3.1 and 3.5.12). Power shall be maintained for a period of 1 hour after the temperature of the assembly has reached equilibrium. This condition is reached when the assembly temperature shall not vary more than 5°C within a 15-minute period. During the test, the assembly shall be terminated in a suitable load. After the test, insertion loss and VSWR shall be measured as specified in 4.7.2 and in 4.7.4, respectively.

4.7.14 Bending test. One end of the assembly shall be firmly fixed to a stationary platform, and a guide or mandrel having a set radius of curvature for the assembly to be tested shall be attached on the same end. The assembly shall be mounted in a straight position in such a manner that it will be neither tension nor compression. An even and smooth oscillating motion shall then be applied to the free end so that the portion near the fixed end will bend around the mandrel. The assembly shall be bent to one side of the relaxed position to the centerline radius and in the planes specified (see 3.1). An appropriate length shall be used which will allow the bend to be accomplished in one revolution or less. The centerline of the assembly shall be normal to the stationary platform when in the relaxed position. The assembly shall be subjected to five complete cycles of bend in each plane from the relaxed position in each plane. One cycle is completed when the assembly is bent from the relaxed position to the specified bend and back to the relaxed position. The stability of insertion loss and the VSWR shall then be measured as specified in 4.7.3 and in 4.7.4, respectively (see 3.5.13).

4.7.15 Flexure. The method of flexure testing shall be as follows using the test machine as shown on figure 3. For assemblies that operate up to 12.4 GHz inclusive, a 24 inch (610 mm) (nominal) long representative sample of the same size and type as the assembly under test may be used for the flexure test. For assemblies that operate above 12.4 GHz and through 26.5 GHz, a 12 inch (305 mm) (nominal) long representative sample of the same size and type as the assembly under test may be used for the flexure test. For assemblies that operate above 26.5 GHz, a 2 inch (51 mm) (nominal) long representative sample of the same size and type as the assembly under test may be used for the flexure test. The pivot point of the test machine shall be located under the geometrical center of the waveguide in the relaxed position as shown on figure 3. The stationary end of the waveguide shall be rigidly secured to an adapter which is motionless throughout the test. A wooden form shall be used to assure that the test sample will take the intended bend. Enough tension shall be applied to cause the test sample to take the radius of the wooden form and return to the straight condition on the reverse stroke. The moving end of the machine shall contain an adapter which will allow the flexed end of the waveguide to move in the radial direction. The apparatus shall be set for the desired flexure angle and a counter shall be installed to record the number of cycles. The planes of bending, the angle of bending, and the number of cycles shall be as specified (see 3.1). This bend shall be in two directions, 50 percent of the angle on one side of the relaxed position and 50 percent of the angle on the opposite side of the relaxed position. The cycling rate shall be 30 cycles per minute minimum. The stability of insertion loss and VSWR shall then be measured as specified in 4.7.3 and in 4.7.4, respectively (see 3.5.14).

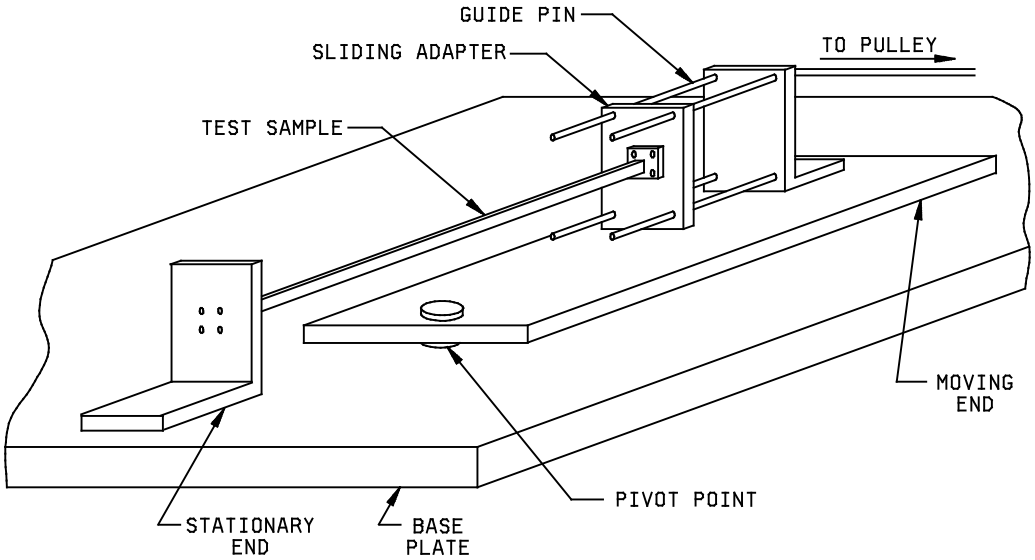

FIGURE 3. Flexure test figure.

4.7.16 Axial twist (applicable only to twistable type). One flange of the assembly shall be securely fastened to a stationary platform. To prevent the assembly from bending, a rigid shaft that extends through the long axis of the waveguide as an axis of rotation shall be mounted to the platform. The other flange shall be connected to this shaft and shall be free to rotate about it. Uniform alternating clockwise and counterclockwise twisting shall be applied to the assembly about the axis. The assembly shall be subjected to five complete cycles of clockwise and counterclockwise twist from the relaxed position to the angle appropriate for the length under test (see 3.1). Twisting shall be performed uniformly at a rate of approximately 1 cycle per 10 seconds. At the end of the test cycle, the assembly shall be under neither tension nor compression. The stability of insertion loss and VSWR shall then be measured as specified in 4.7.3 and 4.7.4, respectively (see 3.5.15).

4.7.17 Repeated twist (applicable only to twistable type one-way twisting). Repeated twist test shall be performed as specified in 4.7.16, except the number of cycles shall be as specified (see 3.1). For assemblies that operate up to 12.4 GHz inclusive, a 24 inch (610 mm) (nominal) long representative sample of the same size and type as the assembly under test may be used for the repeated twist test. For assemblies that operate above 12.4 GHz and through 26.5 GHz, a 12 inch (305 mm) (nominal) long representative sample of the sample size and type as the assembly under test may be used for the repeated twist test. For assemblies that operate above 26.5 GHz, a 2 inch (51 mm) (nominal) long representative sample of the same size and type as the assembly under test may be used for the repeated twist test. The stability of insertion loss and the VSWR shall then be measured as specified in 4.7.3 and in 4.7.4, respectively (see 3.5.16).

5. PACKAGING

5.1 Packaging. For acquisition purposes, the packaging requirements shall be as specified in the contract or order (see 6.2). When packaging of materiel is to be performed by DoD or in-house contractor personnel, these personnel need to contact the responsible packaging activity to ascertain packaging requirements. Packaging requirements are maintained by the Inventory Control Point's packaging activities within the Military Service or Defense Agency, or within the military service's system commands. Packaging data retrieval is available from the managing Military Department's or Defense Agency's automated packaging files, CD-ROM products, or by contacting the responsible packaging activity.

6. NOTES

(This section contains information of a general or explanatory nature which may be helpful, but is not mandatory.)

6.1 Intended use. Twistable and non-twistable, flexible waveguide assemblies are intended for operation in the microwave region of the spectrum, to facilitate complex installations, provide for misalignments, and permit relative motion between connected components. They have satisfactory electrical as well as mechanical characteristics to supplement rigid waveguide assemblies.

6.2 Acquisition requirements. Acquisition documents must specify the following:

a. Title, number, and date of this specification.

b. Title, number, and date of applicable specification sheet and the complete part number.

c. Inspection of commercial packaging.

d. Levels of preservation and packing required (see 5.1).

e. Special marking, if required.

6.3 Military uniqueness. The waveguide assemblies herein specified are military unique because they must function within and withstand for prolonged periods harsh worldwide military unique environments. Commercial electronic components are not designed to withstand such extreme environmental conditions and would experience catastrophic failure. The flexure and twist requirements are beyond the capability of commercial grade components. Nonstandard units would not be compatible with fielded systems whose replacement would be costly.

6.4 First article inspection. Invitations for bids should provide that the government reserves the right to waive the requirement for first article samples from bidders offering products which have been previously acquired or tested by the Government, and that bidders offering such products who wish to rely on such production or tests must furnish evidence with the bid that prior Government approval is presently appropriate for the pending acquisition.

6.5 Definitions. For the purpose of this specification, the following definitions apply:

6.5.1 Twistable and non-twistable, flexible waveguide assemblies. A twistable or non-twistable, flexible waveguide assembly consists of a section of twistable or non-twistable, flexible waveguide with all associated fittings attached thereto and which mates electrically and mechanically with a matched standard rectangular or ridged waveguide. A twistable assembly is capable of withstanding bending, tensile, compressive, or torsional stresses without causing mechanical damage or causing the electrical properties to exceed the values specified (see 3.1). A non-twistable assembly is capable of withstanding bending, tensile, or compressive stresses without causing mechanical damage or causing the electrical properties to exceed the values specified (see 3.1).

6.5.2 Relaxed position. An assembly is in the relaxed position when it is restrained only by a horizontal surface on which it rests subject to no stress except that imposed by gravity.

6.5.3 Minimum centerline (C_L) bending radius. The minimum centerline bending radius is the specified radius measured to the centerline of the assembly to which an assembly can be bent in the appropriate plane and under appropriate conditions without causing mechanical damage or causing electrical properties to exceed the values specified (see 3.1).

6.5.4 E-plane. The E-plane is a plane perpendicular to the wide faces of the waveguide and parallel to the narrow faces for rectangular waveguides.

6.5.5 H-plane. The H-plane is a plane perpendicular to the narrow faces of the waveguide and parallel to the wide faces for rectangular waveguides.

6.5.6 Flexure. Flexure is the number of cycles through which an assembly can be bent without causing mechanical damage or causing the electrical properties to exceed the values specified (see 3.1).

6.5.7 Axial twist. Axial twist is the maximum angle through which one flange of an assembly of a given length can be rotated with respect to the other flange without causing mechanical damage or causing the electrical properties to exceed the values specified (see 3.1). Axial twist is measured in degrees per foot.

6.5.8 Repeated twist. Repeated twist is the number of cycles through which an assembly can be twisted without causing mechanical damage or causing the electrical properties to exceed the values specified (see 3.1).

6.5.9 Bending angle. The bending angle in degree/foot can be derived from the minimum centerline radius (in inches) in 6.5.3 as follows:

The arc length (l) for an arc of "a" degree is $l = \pi ra/180°$

Transposing: $a = 180° \times l/\pi r = 57.3° \times l/r$,

But since r is in inches and we wish degree/foot, multiply $57.3° \times l/r$ by 12 and get "a" = 57.3 (12)/r = 687.54/r

6.5.10 Dissimilar metals. Dissimilar metals are defined in MIL-STD-889.

6.6 Cleaning and drying. Waveguide assemblies should be cleaned and dried in accordance with MIL-STD-2073-1C. Cleaning process should not be injurious to the waveguide assemblies, to humans or to the environment. Use of toxic chemicals, hazardous substances, or ozone depleting chemicals should be avoided.

6.7 Levels of preservation. Methods of preservation should conform to MIL-STD-2073 requirements. Preservatives should not be used. Water vapor-proof barrier material should be used to cover the open ends of each assembly. Barrier material should extend back from each open end and be secured and sealed with tape. Cross strips should be used to reinforce the barrier material. Alternately, the openings should be sealed with cover plates or caps and plugs secured with tape. All sealing devices should meet the water vapor-proof requirements of MIL-PRF-131.

6.8 Subject term (key word) listing.

Bending angle	Load
Cold bending	Microwave
E-plane	Modulator
Finish	Pressurization
Flange	Radio frequency (RF)
Flexure	Retention
H-plane	Rigid
Insertion loss	Twist
Jacket	Voltage standing wave ratio (VSWR)
Length	

6.9 Environmentally preferable material. Environmentally preferable materials should be used to the maximum extent possible to meet the requirements of this specification. As of the dating of this document, the U.S. Environmentally Protection Agency (EPA) is focusing efforts on reducing 31 priority chemicals. The list of chemicals and additional information is available on their website at http://www.epa.gov/osw/hazard/wastemin/priority.htm. Included in the list of 31 priority chemicals are cadmium, lead, and mercury. Use of the materials on the list should be minimized or eliminated unless needed to meet the requirements specified herein (see section 3).

6.10 Tin whisker growth. The use of alloys with tin content greater than 97 percent, by mass, may exhibit tin whisker growth problems after manufacture. Tin whiskers may occur anytime from a day to years after manufacture and can develop under typical operating conditions, on products that use such materials. Conformal coatings applied over top of a whisker-prone surface will not prevent the formation of tin whiskers. Alloys of 3 percent lead, by mass, have shown to inhibit the growth of tin whiskers. For additional information on this matter, refer to ASTM-B545 (Standard Specification for Electrodeposited Coatings of Tin).

6.11 Changes from previous issue. The margins of this specification are marked with vertical lines to indicate where changes from the previous revision were made. This was done as a convenience only and the Government assumes no liability whatsoever for any inaccuracies in these notations. Bidders and contractors are cautioned to evaluate the requirements of this document based on the entire content irrespective of the marginal notations and relationship to the last previous issue.

Custodians:
Army - CR
Navy - EC
Air Force - 85
DLA - CC

Preparing activity:
DLA - CC

(Project 5985-2012-021)

Review activities:
Army - AR, AV, MI
Navy - AS, CG, MC, OS
Air Force - 19, 99

NOTE: The activities listed above were interested in this document as of the date of this document. Since organizations and responsibilities can change, you should verify the currency of the information above using the ASSIST Online database at https://assist.daps.dla.mil/.