INCH-POUND

MIL-DTL-28693B
29 September 2016
SUPERSEDING
MIL-DTL-28693A
1 October 2007

DETAIL SPECIFICATION

HOSE, RUBBER, OIL AND GASOLINE DISCHARGE, SMOOTH BORE, LIGHTWEIGHT BUOYANT TYPE, LONGITUDINALLY REINFORCED, 6 INCH

This specification is approved for use by the Naval Facilities Engineering Command, Department of the Navy, and is available for use by all Departments and Agencies of the Department of Defense.

1. SCOPE

1.1 Scope. This specification covers a hose, rubber, oil and gasoline discharge, smooth bore, lightweight buoyant type, longitudinally reinforced, 6 inch furnished with couplings and a hose support ring. The system is intended for use as part of a buoyant fueling system. The maximum working pressure of this hose is 150psi (1 MPa).

1.2 Part or Identifying Number (PIN). The hose PIN consists of the letter M, the basic specification number, a dash, 100 hose length, and blank for hose assembly, or R for hose support ring.

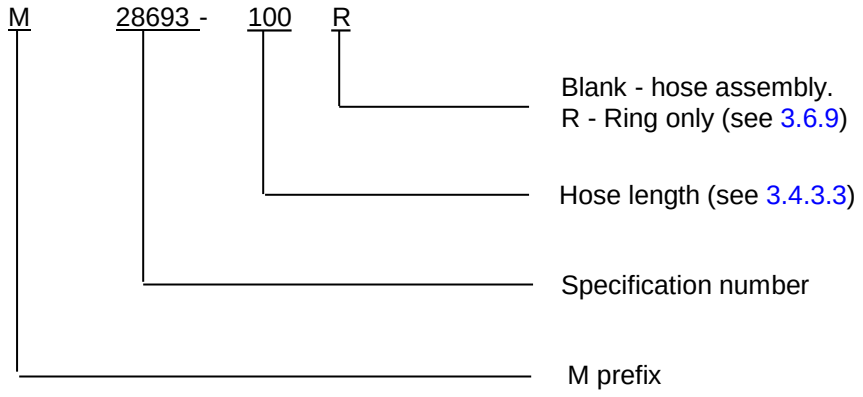

PIN example: M28693-100

Comments, suggestions, or questions on this document should be addressed to: DLA Land and Maritime, Attn: VAI, P.O. Box 3990, Columbus, OH 43218-3990, or emailed to FluidFlow@dla.mil. Since contact information can change, you may want to verify the currency of this address information using the ASSIST Online database at https://assist.dla.mil.

AMSC N/A

FSC 4720

2. APPLICABLE DOCUMENTS

2.1 General. The documents listed in this section are specified in sections 3 or 4 of this specification. This section does not include documents cited in other sections of this specification or recommended for additional information or as examples. While every effort has been made to ensure the completeness of this list, document users are cautioned that they must meet all specified requirements documents cited in sections 3 or 4 of this specification, whether or not they are listed.

2.2 Government documents.

2.2.1 Specifications, standards, and handbooks. The following specifications, standards, and handbooks form a part of this document to the extent specified herein. Unless otherwise specified, the issues of these documents are those cited in the solicitation or contract.

FEDERAL STANDARDS

FED-STD-162	-	Hose, Rubber, Visual Inspection Guide for
FED-STD-601	-	Rubber, Sampling and Testing

DEPARTMENT OF DEFENSE SPECIFICATION

MIL-C-24356	-	Coupling, Segmented and Split Clamps, Reattachable, 2-1/2, 4-, 6-, and 7-inch, for Refueling-at-Sea-Hose

(Copies of these documents are available online at https://assist.dla.mil.)

CODE OF FEDERAL REGULATIONS (CFR)

21 CFR 177	-	Indirect Food Additives: Polymers

(Copies of these documents are available online at http://www.ecfr.gov.)

2.3 Non-Government publications. The following documents form a part of this document to the extent specified herein. Unless otherwise specified, the issues of these documents are those cited in the solicitation or contract.

ASTM INTERNATIONAL

ASTM A153/A153M	-	Standard Specification for Zinc Coating (Hot-Dip) on Iron and Steel Hardware
ASTM A572/A572M	-	Standard Specification for High-Strength Low-Alloy Columbium-Vanadium Structural Steel
ASTM D297	-	Standard Test Methods for Rubber Products-Chemical Analysis.
ASTM D380	-	Standard Test Methods for Rubber Hose
ASTM D381	-	Standard Test Method for Gum Content in Fuels by Jet Evaporation
ASTM D412	-	Standard Test Methods for Vulcanized Rubber and Thermoplastic Rubbers and Thermoplastic Elastomers-Tension
ASTM D413	-	Standard Test Methods for Rubber Property-Adhesion to Flexible Substrate
ASTM D471	-	Standard Test Method for Rubber Property-Effect of Liquids
ASTM D573	-	Standard Test Method for Rubber-Deterioration in an Air Oven

ASTM D1149 - Standard Test Method for Rubber-Deterioration-Surface Ozone Cracking in a Chamber

(Copies of these documents are available online at http://www.astm.org.)

SAE INTERNATIONAL

SAE-AS1933 - Age Controls for Hose Containing Age-Sensitive Elastomeric Material

(Copies of these documents are available online at http://www.sae.org.)

2.4 Order of precedence. In the event of a conflict between the text of this document and the references cited herein, the text of this document takes precedence. Nothing in this document, however, supersedes applicable laws and regulations unless a specific exemption has been obtained.

3. REQUIREMENTS

3.1 First article. When specified (see 6.2), samples shall be subjected to first article inspection in accordance with 4.5.

3.2 Drawings. Drawings forming a part of this specification are engineering design drawings. The contractor is responsible for preparing his own shop drawings. Where tolerances provided could cumulatively result in incorrect fits, the contractor shall provide tolerances within those prescribed on the drawings to ensure correct fit, assembly, and operation of the items. No deviation from the prescribed dimensions or tolerances is permissible without the approval of the contracting officer.

3.3 Materials. Materials shall be as specified herein and in referenced specifications and standards and other referenced documents. Materials not specified shall be selected by the contractor and shall be subject to all provisions of this specification. Materials shall be free of defects, which adversely affect performance of the finished product.

3.3.1 Recycled, recovered, or environmentally preferable materials. Recycled, recovered, or environmentally preferable materials should be used to the maximum extent possible provided that the material meets or exceeds the operational and maintenance requirements, and promotes economically advantageous life cycle costs.

3.4 Hose construction. The hose shall have a rubber tube, reinforcement consisting of either braided synthetic fiber or yarn or multiple plies of synthetic fiber fabric held together with rubber friction, and a rubber cover. Ester based polyurethane shall not be an acceptable material. The hose shall have longitudinal reinforcement of synthetic fiber cord incorporated into the hose carcass and extending the length of the hose. Both ends of the hose shall be cut square.

3.4.1 Inner tube. The inner tube material shall be polyurethane resins approved in U.S. Code of Federal Regulations - CFR Title 21, Part 177, Section 2600 (21 CFR 177.2600) intended for use in contact with aqueous food when extracted with distilled water at reflux temperature, shall yield total extractives not to exceed 20 milligrams per square inch during the first 7 hours of extraction, nor to exceed 1 milligram per square inch during the succeeding 2 hours of extraction in accordance with 21 CFR 177.2600.

3.4.2 Properties of rubber components (tube, friction rubber, and cover). Rubber used in the hose construction shall be in accordance with requirements listed in table I, when tested as specified in 4.7.9.

3.4.2.1 Initial tensile properties. When tested in 4.7.9.1 hose samples shall meet the requirements in table I.

3.4.2.2 Tensile properties after immersion. When tested in 4.7.9.2 hose samples shall meet the requirements in table I.

3.4.2.3 Tensile properties after oven aging. When tested in 4.7.9.3 hose samples shall meet the requirements in table I.

3.4.2.4 Volume change after immersion. Tube, cover, and friction rubber when tested in 4.7.9.4 shall meet the requirements in table I.

3.4.2.5 Initial adhesion. The adhesion of tube to cover when tested in 4.7.9.5 shall meet the requirements in table I.

3.4.2.6 Adhesion after immersion. The adhesion of tube to cover when tested in 4.7.9.6 shall meet the requirements in table I.

3.4.2.7 Nonvolatile extractable material. A tube sample when tested in 4.7.9.7 shall meet the requirements in table I.

3.4.2.8 Phosphate plasticizer test. A tube sample when tested in 4.7.9.8 shall meet the requirements in table I.

3.4.2.9 Resistance to ozone. A cover sample when tested in 4.7.9.9 shall meet the requirements in table I.

3.4.2.9.1 Hazardous substances and ozone depleting chemicals. The ozone resistance test (see 4.7.9.9) may contain hazardous chemicals. It shall be handled in accordance with Federal regulations and guidelines to perform those tests. For further information about toxic chemicals and hazardous materials list, consult the Environmental Protection Agency web database at www.epa.gov/ebtpages/pollutants.html.

3.4.2.10 Low temperature bend test. A tube and cover sample when tested in 4.7.9.10 hose samples shall meet the requirements in table I.

TABLE I. Requirements for rubber (tube, cover, and friction) used in hose.

Properties		Tube	Cover	Friction	Test paragraph
Initial properties:					
Tensile strength	psi minimum	2300	1600		4.7.9.1
Ultimate elongation	percent minimum	300	350		4.7.9.1
Adhesion	psi minimum	30	30	30	4.7.9.5
Properties after immersion in test fluid:					
Tensile strength	psi minimum	1400	800		4.7.9.2
Ultimate elongation	percent minimum	200	200		4.7.9.2
Volume increase, percent (no shrinkage permitted)	percent maximum	30	30	30	4.7.9.4
Adhesion	psi minimum	20	20	20	4.7.9.6
Properties after oven aging:					
Tensile strength	psi minimum	2000	1450		4.7.9.3
Ultimate elongation	percent minimum	250	250		4.7.9.3
Nonvolatile extract from tube	percent maximum	3.0			4.7.9.7
Phosphate plasticizer in tube	Determination qualitative	Absent			4.7.9.8
Resistance of cover to ozone	Visual	No cracking	No cracking		4.7.9.9
Low temperature bend	Visual	No cracking	No cracking		4.7.9.10

3.4.3 Dimensions.

3.4.3.1 Tube thickness. The tube thickness shall be .094-inch (28.65 mm) minimum, when measured in accordance with 4.7.1.3.

3.4.3.2 Cover thickness. Cover thickness shall be .078-inch (23.77 mm) minimum when measured in accordance with 4.7.1.3.

3.4.3.3 Length. The length of the hose shall be 100 ±1 foot (30.5 m ± 0.30 m), when measured in accordance with 4.7.1.1.

3.4.3.4 Inside diameter (ID). The inside diameter shall be 6 +.125 -.000 inches (15.2 cm +3.18 mm -0.00 mm), when measured in 4.7.1.2.

3.4.3.5 Wall thickness (end of hose). The last 12 inches (3.66 m) of each end of the hose shall have a wall thickness of .422 ± .047 inches (10.72 ± 1.19 mm) , when measured in 4.7.1.4 to assure secure attachment of the hose couplings to the hose. If the normal hose wall thickness does not meet this requirement, the ends shall be built up to the required wall thickness. The transition to the required wall thickness shall be tapered. Hose ends shall be compatible with the couplings specified in MIL-C-24356.

3.5 Hose assembly construction.

3.5.1 Couplings and fittings. Each of the hoses shall be equipped with couplings in accordance with MIL-C-24356, size 6-inch, see figure 1. One coupling on the hose assembly shall be male the other coupling shall be female.

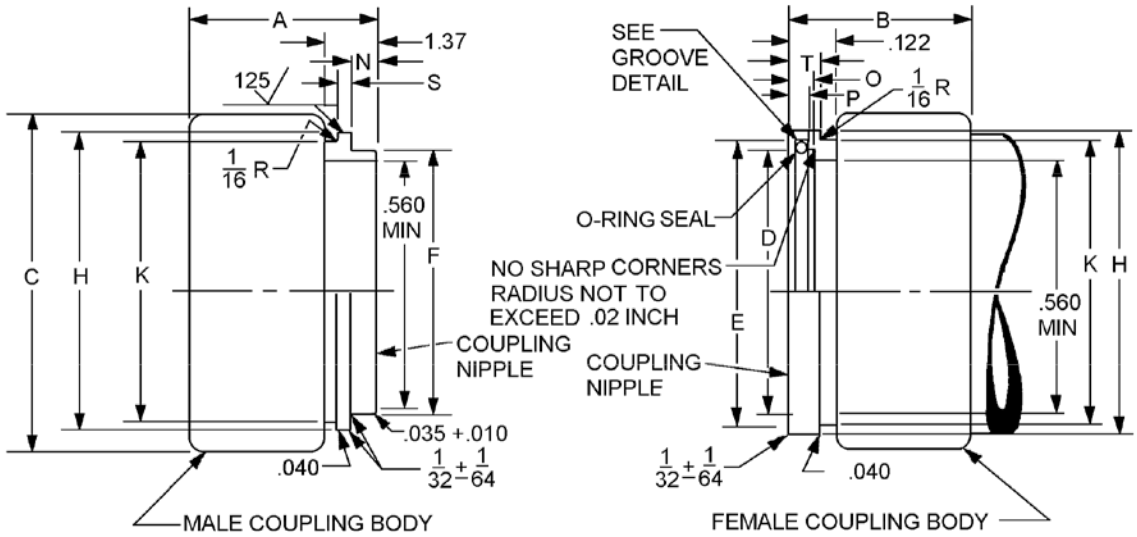

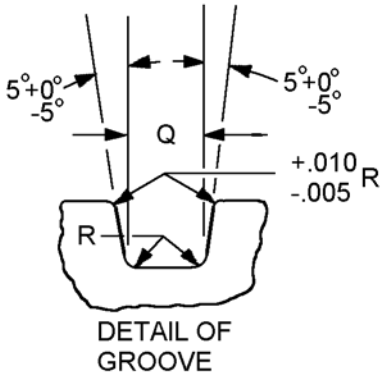

Inches	mm
.005	0.13
.010	0.25
.035	0.89
.040	1.02
.172	4.37
.560	14.22
1.87	47.50

FIGURE 1. Couplings.

NOTES
1. Dimensions are in inches.
2. Metric equivalents are given for information only.
3. All diameters shall be concentric within .010 inch (0.25 mm) TIR.
4. Tolerances shall be ±.005 on decimals and ±1/64 on fractions.
5. All grove surfaces shall be .63 .
6. All dimensions shall be in accordance with MIL-C-24356, except J (5.60 min inch), L (1.72 inch), and M (1.87 inch) dimensions shall be as specified herein to assure clearance for installation of hose support ring.
7. Material composition for end coupling body and nipple shall be wrought aluminum alloy (6061-T6).

FIGURE 1. Couplings - Continued.

3.5.2 Split clamp and band assembly. One 6-inch split clamp and band assembly in accordance with MIL-C-24356, consisting of an “O” ring, two split clamp halves, one band and all necessary screws shall be provided with each length of hose.

3.6 Performance.

3.6.1 Visual examination. The hose assembly shall conform to the requirements of this specification when visually examined as specified in 4.7.1.

3.6.2 Weight. The unit weight of the hose, without couplings, shall be not more than 4.0 pounds (1.81 kg) per foot (30.5 cm) when measured in 4.7.2. The entire lot shall be rejected if any sample hose fails to meet the requirement for unit weight.

3.6.3 Proof pressure. The hose shall withstand a proof pressure of 300 psig (21.09 kilogram per centimeter^2) without leakage or other indication of weakness when tested in 4.7.3.

3.6.4 Dimensional stability. When tested in 4.7.4, the hose shall not increase in length more than 15 percent nor increase in outside diameter more than 18 percent, nor shall the twist be more than 0.5° per foot (30.5 cm) while under pressure. The hose shall not retain more than 5 percent change in length or 3 percent change in OD after releasing the pressure. All calculations shall be based on the original dimensions of the hose.

3.6.5 Air pressure. Hoses, inside and outside, shall be free of any blisters or other evidence of disruption when tested in 4.7.5.

3.6.6 Burst pressure. A sample of the hose shall not burst at less than 600 psig (4.2 MPa) when tested in 4.7.6.

3.6.7 Tensile pull. The hose shall be capable of withstanding a tensile pull of 12,000 lbs (5443 kg) for 5 minutes, and shall have a breaking tensile of not less than 16,000 lbs (72.57.5 kg) when tested in 4.7.7. At the 12,000-lb (5443 kg) tensile pull there shall be no apparent damage to the hose or weakening of the coupling grips.

3.6.7.1 Elongation. The hose shall have an elongation of not more than 10 percent when loaded to 6,000 lbs (2721.5 kg) in 4.7.7.

3.6.8 Flexibility. The hose shall have sufficient flexibility to collapse to 2.5 inches (63.50 mm) in cross-sectional height, under an applied load of 100 lb (45.4 kg), when tested in 4.7.9. The specimen may be tested in any convenient orientation that conforms to the requirements of 4.7.9.

3.6.9 Hose support ring (RHS-6). One hose support ring (RHS-6), as specified on figure 2 shall be provided per 100 foot (30.5 m) section of hose for installation. The inner diameter of the hose support ring shall not change greater than 5 percent with a load of 6,000 lb (2.72 Mg) when tested in 4.7.10.

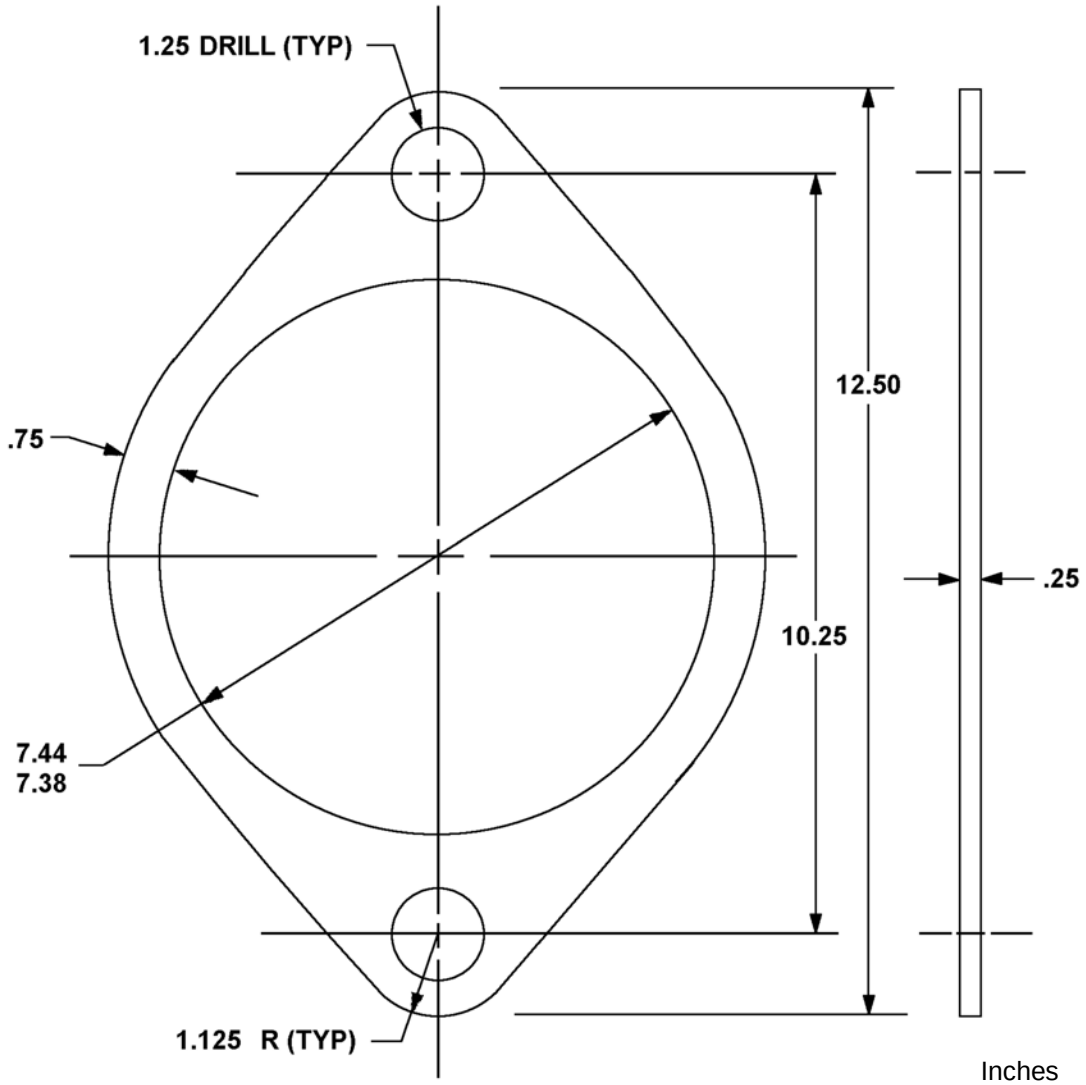

Inches	mm
.75	19.05
1.125	28.58
1.25	31.75
7.38	187.45
7.44	188.98
10.25	260.35
12.50	317.50

NOTES:
1. Dimensions are in inches
2. Metric equivalents are given for information only.
3. Mechanically formed preferred to torch cutting.
4. 1/32 inch x 45º chamfer each side of 1.25 inch (31.75 mm) holes.
5. Steel plate in accordance with ASTM A572/A572M grade 50 or higher.
6. Galvanize after fabrication in accordance with ASTM A153/A153M.

FIGURE 2. Ring, hose support (Mark No. RHS - 6).

3.7 Branding and marking.

3.7.1 Hose branding. Each length of hose shall be branded in letters at least ¼-inch high inlaid in the cover and vulcanized thereto about 5 feet from each end. The branding shall include the following:

a. Supplier's name and/or trademark.
b. Month and year of manufacture.
c. Oil, gasoline, longitudinally reinforced, 150 psi.
d. NSN 4720-LL-LCA-0057.

3.7.2 Hose striping. Each length of hose shall be marked with longitudinal white or red stripes along its entire length to show the natural relaxed position of the hose. The stripes shall be a white or red compound securely vulcanized to the outer cover of the hose. The stripes shall be spaced 180º apart around the circumference of the hose and run the entire length of the hose. If the longitudinal reinforcement of the hose consists of two synthetic fiber straps, the stripes shall be placed over the straps to indicate their location in the hose.

3.8 Workmanship.

3.8.1 Hose. The hose shall exhibit no blisters or other evidence of disruption on its interior and exterior surfaces after the air pressure test specified in 4.7.5.

3.8.2 Castings. All castings shall be sound and free from patching, misplaced coring, warping, or any other defect, which reduces the capability of the casting to perform its intended function.

3.9 Cleanliness. All hose assemblies shall be free from oil, grease, dirt, moisture, cleaning solvents and other foreign material, both internally and externally.

3.10 Interchangeability. All units of the same classification furnished with similar options under a specific contract shall be identical to the extent necessary to ensure interchangeability of component parts, assemblies, accessories, and spare parts.

3.11 Age limits. The age of the hose shall not exceed the age limits specified in SAE-AS1933.

4. VERIFICATION

4.1 Classification of inspection. The inspection requirements specified herein are classified as follows:

a. First article inspection (see 4.5).

b. Conformance inspection (see 4.6).

4.2 Inspection conditions. Unless otherwise specified, all inspections shall be performed in accordance with the test conditions specified in the applicable test method referenced in the test procedures.

4.3 Test equipment and inspection facilities. Test and measuring equipment and inspection facilities of sufficient accuracy, quality and quantity to permit performance of the required inspection shall be used.

4.3.1 Pressures. Pressures and pressure differentials shall be measured by means of Bourdon-type gages or other pressure sensing device. The pressure gage shall have an accuracy of one percent of scale reading.

4.3.2 Temperatures. Temperatures shall be measured by appropriately located thermometers or thermocouples used with calibrated potentiometers. The thermometers or thermocouples shall have accuracy within ±2°F (1.11°C).

4.4 Responsibility for compliance. All items shall meet all requirements of sections 3, 4, and 5. The inspection set forth in this specification shall become a part of the contractor's overall inspection system or quality program. The absence of any inspection requirements in the specification shall not relieve the contractor of the responsibility of ensuring that all products or supplies submitted to the Government for acceptance comply with all requirements of the contract. Sampling inspection, as part of manufacturing operations, is an acceptable practice to ascertain conformance to requirements, however, this does not authorize submission of known defective material, either indicated or actual, nor does it commit the Government to accept defective material.

4.4.1 Lot records. Manufacturers shall keep lot records for 3 years minimum. Manufacturers shall monitor for compliance to the prescribed procedures, and observe that satisfactory manufacturing conditions and records on lots are maintained for these hose assemblies. The records, including as a minimum, an attributes summary of all quality conformance inspections conducted on each lot, shall be available to review by customers at all times.

4.5 First article inspection. First article inspection shall be performed at a laboratory acceptable to the procuring activity on sample units produced with equipment and procedures used in production.

4.5.1 Samples for first article. Samples for first article shall be representative of the products proposed to be furnished to this specification. Sampling for hose assemblies shall be in accordance with 4.5.2.

4.5.2 First article inspection. The first article inspection shall be performed on a complete hose assembly. The first article may be either a first production unit or a standard production item from the supplier’s current inventory provided the item meets the requirements of this specification and is representative of the design, construction, and manufacturing technique applicable to the remaining items to be furnished under the contract.

4.5.3 Sampling for test. Tests that require only a sample for test shall be from units of product that have been subjected to and have passed, the examination cited in 4.5, excluding length (100 feet).

4.5.3.1 Sample for flexibility test. A 12-inch (30.5) length of hose identical to the hose submitted for the lot shall be submitted for the flexibility test cited in 4.7.8.

4.5.3.2 Sampling for burst pressure, tube and cover thickness, and rubber components tests. A 36-inch (91.44 cm) length of hose identical to the hose submitted for the lot shall be submitted for t burst test specified in 4.7.6. At the completion of the burst test, additional tests shall be conducted as specified in tube and cover thickness (see 4.7.1.3) and properties of rubber components (see 4.7.9) on an undamaged section of the 36-inch (91.44 cm) sample of the hose submitted for the burst test.

4.5.3.3 Sample for tensile pull and elongation test. A section of hose not less than 12-inches (30.5 cm) in length identical to the hose submitted for the lot shall be submitted for the tensile pull and elongation test specified in 4.7.7.

4.5.3.4 Sampling for volume change after immersion (friction rubber). A vulcanized sample of the rubber friction used to impregnate the fabric reinforcement shall be provided for the volume change after immersion (see 4.7.9.4). The sample shall be 6 inches by 6 inches by .080 ±.010 inch (15.24 cm by 15.24 cm by 2.03 ±0.25 mm), and shall have the same composition as the friction used in the hose and an equivalent cure.

4.5.4 First article inspection routine. All samples shall be subjected to first article testing as specified in table II. The test sequence shall be determined by the manufacturer unless otherwise specified.

TABLE II. First article inspection.

Test	Requirement paragraph	Test paragraph
Visual examination 1/	3.4.3, 3.6.1, 3.7, 3.8, 3.9, 3.10, and 3.11	4.7.1
Unit weight (prior to assembly of couplings) 1/	3.6.2	4.7.2
Proof pressure 1/	3.6.3	4.7.3
Dimensional stability	3.6.4	4.7.4
Air pressure test 2/	3.6.5	4.7.5
Burst pressure	3.6.6	4.7.6
Tensile pull and elongation	3.6.7	4.7.7
Flexibility test	3.6.8	4.7.8
Properties of rubber components 3/	3.4.2	4.7.9
Initial tensile properties	3.4.2.1	4.7.9.1
Tensile properties after immersion	3.4.2.2	4.7.9.2
Tensile properties after oven aging	3.4.2.3	4.7.9.3
Volume change after immersion	3.4.2.4	4.7.9.4
Initial adhesion	3.4.2.5	4.7.9.5
Adhesion after immersion	3.4.2.6	4.7.9.6
Nonvolatile extractable material	3.4.2.7	4.7.9.7
Phosphate plasticizer test	3.4.2.8	4.7.9.8
Resistance to ozone	3.4.2.9	4.7.9.9
Low temperature bend test	3.4.2.10	4.7.9.10
Hose support ring test	3.6.9	4.7.10

1/ 100 percent inspection.
2/ If any hose fails to meet the requirements for air pressure testing the entire lot shall be rejected.
3/ Rubber samples.

4.5.4.1 Waivers or deviations to specification requirements. All waivers or deviations to specification requirements shall be coordinated through the preparing activity; Defense Supply Center, Columbus, Attn: VAI, P.O. Box 3990, Columbus, OH 43218-3990, or emailed to Construction@dscc.dla.mil.

4.5.4.2 Failures. All samples shall meet all of the contract requirements. Failure of a sample unit to pass any test shall be cause for rejection of the entire lot and refusal to grant first article approval.

4.5.4.3 First article information. Upon completion of first article inspection, the Government activity responsible for conducting the inspection program (see 6.2), shall report the results of the inspection, with appropriate recommendation, to the contracting officer. Approval of the first article samples or the waiving of first article inspection does not preclude the requirements for performing individual, or sampling and periodic inspections.

4.5.4.4 Disposition of samples. First article samples shall be furnished to the Government as directed by the contracting officer (see 6.2).

4.6 Conformance inspection. For manufacturers that have successfully passed first article inspections and are continuously producing hose assemblies to this specification, on going inspections shall consist of individual inspections, see table III.

TABLE III. Individual inspections.

Test	Requirement paragraph	Test paragraph	Samples
Visual examination	3.4.3, 3.6.1, 3.7, 3.8, 3.9, 3.10, and 3.11	4.7.1	All
Unit weight (prior to assembly of couplings)	3.6.2	4.7.2	All
Proof pressure	3.6.3	4.7.3	All

4.6.1 Failure. Failure of an article sample to pass any of the inspections specified herein shall be cause for the Government to refuse to accept further products until corrective action has been made and successful completion of first article testing.

4.7 Performance inspections.

4.7.1 Visual examination (see 3.6.1). Each hose assembly and its related manufacturing records shall be examined for compliance with the requirements specified herein with respect to dimensions, identification of product, workmanship, cleanliness, interchangeability, and age limitations, see 3.4.3, 3.8, 3.9, 3.10, and 3.11. The classification of defects as specified in FED-STD-162 shall be used to determine and evaluate defects through visual inspection.

4.7.1.1 Length (3.4.3.3). Hose selected shall be measured for length as specified in ASTM D380 to determine conformance to 3.4.3.3.

4.7.1.2 Inside diameter (see 3.4.3.4). Hose selected shall have the ID measured as specified in ASTM D380 to determine conformance to 3.4.3.4.

4.7.1.3 Tube and cover thickness (see 3.4.3.1 and 3.4.3.2). The thickness of the tube and cover shall be measured on specimens removed from each end of the hose section obtained in accordance with 4.5.3.2 to determine conformance to 3.4.3.1 and 3.4.3.2. The thickness shall be determined by the procedure given in ASTM D380, except that only buffed specimens shall be measured. The respective values found for the tube thickness shall not be averaged, but shall be regarded as independent measurements, each of which shall meet the requirement. The respective values for the cover thickness shall be treated in the same manner.

4.7.1.4 Wall thickness (see 3.4.3.5). The wall thickness of all hoses in the sampling shall be measured at both ends using a deep throat micrometer to determine conformance to 3.4.3.5. The measurements shall be made at least every 90º around the circumference at points 2, 8, and 12 inches (5.08, 20.3, and 30.5 cm) in from the ends of the hoses. The entire lot shall be rejected if the wall thickness of any hose in the sampling is more than .016 inch (0.41 mm) above the maximum given in 3.5. The lot shall be accepted if the wall thickness of any hose in the sampling is above the maximum tolerance providing that all of the following conditions are met:

a. The excess above the maximum tolerance is no more than .016 inch (0.41 mm).
b. The excess thickness prevails over not more than 25 percent of the applicable circumference.
c. An equal or greater proportion of the applicable circumference has a wall thickness at least .016 inch (0.41 mm) under the maximum tolerance.

4.7.2 Unit weight (see 3.6.2). The unit weight of all hoses shall be determined by weighing the hoses without couplings. The readings shall be accurate to the nearest pound. The weight of each hose shall be divided by its length to determine conformance to 3.6.2.

4.7.3 Proof pressure (see 3.6.3). Each length of hose shall be equipped with couplings and subjected to 300 psig proof pressure to determine conformance to 3.6.3. The following details shall apply:

a. Before starting the tests, a 10 psig (0.69 bar) hydrostatic pressure shall be established in the hose, and the length, the OD, and a zero index for the twist (see 4.7.4) determined.
b. The method shall be as described in ASTM D380, except that the hydrostatic pressure rate shall not exceed 1,000 psig (6.9 MPa) per minute.
c. The proof pressure shall be held for 5 minutes and the hose and fittings examined for leakage or other indication of weakness.
d. At the end of the 5-minute period and while the pressure is maintained, the length, OD, and twist of the hose shall be measured for the determination of dimensional stability.
e Failure of any hose to meet the requirements of proof pressure shall be cause for rejection of the entire lot.

4.7.4 Dimensional stability (see 3.6.4). The effect of the proof test pressure on the length, OD, and twist of all hoses in the sampling shall be determined as specified in 4.7.3 and ASTM D380. The following details shall apply:

a. The pressure shall then be reduced to “0” psig and the hose left in this condition for 5 minutes.
b. At the end of this period, the diameter and length of the hose shall be measured to determine conformance to 3.6.4.
c. The entire lot shall be rejected if any hose sample fails to meet the requirement for dimensional stability.

4.7.5 Air pressure test (see 3.6.5). Hoses when tested for air pressure shall meet the requirements of 3.6.5. The following details shall apply:

a. Each of the hoses in the sampling shall be subjected to 125 ±5 psig (8.61 bar ±0.34 bar) air or nitrogen pressure for not less than 10 minutes, followed by a complete release of pressure within 15 seconds.
b. The outside and inside surfaces of the hose shall be examined within 5 minutes for blisters or other evidence of disruption.
c. The inside of the hose shall be inspected by sighting from one end of the straight hose while a light is held at the other end of the hose.

d. This test shall be performed after the hose has been equipped with couplings (see 3.5.1) to determine conformance to 3.6.5. (Suitable precautions shall be taken to protect operators from injury during the test in case the couplings are blown off or the hose ruptures).

4.7.6 Burst pressure (see 3.6.6). A section of hose obtained in accordance with 4.5.3.2 shall be equipped with couplings and the burst pressure of this section in the straight conditions shall then be determined in accordance with ASTM D380 to determine conformance to 3.6.6

4.7.7 Tensile pull and elongation (see 3.6.7 and 3.6.7.1). A section of hose when subjected to tensile and pull elongation shall meet the requirements of 3.6.7. The following details shall apply:

a. The hose section obtained in accordance with 4.5.3.3 shall be equipped, on each end, with couplings conforming to MIL-C-24356.
b. The ends of the couplings on the hose shall be adapted for testing in tension in a universal-testing machine.
c. Two bench marks, 1 inch (25.4 mm) apart and 5-1/2 inches (14 cm) from each end of the hose between couplings shall be marked on the outside (cover) for measuring elongation.
d. The section of hose with couplings shall be subjected to a tensile load of 6,000 lbs (2721.55 kg) in the axial direction and held at that load while the increase in distance is marked.
e. This measurement and the original measurement shall be used to calculate the elongation percent for conformance with 3.6.7.
f. The tensile loading shall be increased to 12,000 lbs (5443.11 kg)and held at that load for 5 minutes while the hose is inspected for damage or weakening of the coupling grips.
g. The tensile loading shall be released and the hose allowed a period of 10 minutes to return to normal, at which time it shall be visually inspected.
h. The hose shall be rejected if the inspection reveals visible damage, such as wrinkling or bubbling of the cover or interior tube, an increase in length in excess of 1.5 percent, or other visible indications of structural failure or delamination of the hose components.
i. The tensile load shall then be reapplied and increased until failure occurs.
j. The failure load and the type of failure, (i.e., hose break or coupling pullout) shall be recorded.
k. The rate of loading for the elongation and tensile tests shall be 1.0 inch (25.4 mm) per minute.

4.7.8 Flexibility test (see 3.6.8).

a. The specimen for this test shall be a 12-inch (30.5 cm) section with square-cut ends obtained in accordance with 4.5.3.1.
b. The load shall be applied perpendicular to the longitudinal direction of the specimen by means of two plates, which evenly distribute the applied load over the entire specimen.
c. The hose specimen shall be compressed at a rate of 1 inch per minute until the applied load has reached 100 lb ±2 lb (45.4 kg ± 0.91 kg) force.
d. Within 15 seconds after this load, the distance between the two plates shall be measured.
e. The distance between the plates shall not exceed 2-1/2 inches (6.35 cm).

4.7.9 Properties of rubber components (see 3.4.2). To determine conformance to 3.4.2, the properties of rubber components, except the swelling in test fuel of the friction rubber on the reinforcing fabric, shall be determined as follows:

a. Samples shall be longitudinal specimens prepared from the hose section obtained in accordance with 4.5.3.2.
b. After separating and buffing smooth, the tube and cover samples shall be permitted to rest no less than 30 minutes before preparing test specimens.

c. The swelling in testing fuel of the friction rubber shall be determined using specimens cut from the sample obtained in accordance with 4.5.3.4.

4.7.9.1 Initial tensile properties (see 3.4.2.1). Hose samples shall be tested for initial tensile strength and ultimate elongation in accordance with ASTM D412, test procedure A, using specimens cut with die C (dumbbell).

4.7.9.2 Tensile properties after immersion (see 3.4.2.2). Hose samples shall be tested for tensile strength and ultimate elongation, after immersion in ASTM reference fuel B for 46 ±1/2 hours at 73°F ±4ºF (22.8° ±2.2°C), shall be determined in accordance with ASTM D471, using specimens cut with die C (dumbbell) as specified in ASTM D412. Tensile strength shall be based on the swollen cross sectional area of the specimen.

4.7.9.3 Tensile properties after oven aging (see 3.4.2.3) Hose samples shall be tested for tensile strength and ultimate elongation after oven aging shall be determined in accordance with ASTM D573, using specimens cut with die C (dumbbell) as specified in ASTM D412, except that the aging period shall be 70 ±1/4 hours at 212°F ±2º F (100°C±1.1°C).

4.7.9.4 Volume change after immersion (see 3.4.2.4). The change in volume of samples of the tube, cover, and friction rubber after immersion in ASTM Reference Fuel B for 46 ±1/2 hours at 73°F ±4ºF (22.8° ±2.2°C) shall be determined in accordance with ASTM D471. The change in volume shall be reported as a percent of the original volume.

4.7.9.5 Initial adhesion (see 3.4.2.5). The adhesion of the tube and cover to the reinforcement, and the plies of reinforcement to each other, shall be determined in accordance with ASTM D413 machine method, and shall meet the requirement of 3.4.2.5.

4.7.9.5.1 Specimens. Strip or ring specimens shall be prepared in accordance with ASTM D380. For determining adhesion between plies of reinforcement, the plies to be separated must be at opposing angles. Three specimens of each interface shall be tested.

4.7.9.6 Adhesion after immersion (see 3.4.2.6). The adhesion of the tube and cover to the reinforcement, and of the plies of reinforcement to each other, shall be determined after the test specimens (see 4.5.3.2) have been immersed in ASTM reference fuel B in accordance with ASTM D471 for 46 ±1/2 hours at 80°F ±9ºF (26.7°C ± 5°C). The procedure for adhesion shall be in accordance with ASTM D413 machine method, except the wet specimen shall be tested within 15 minutes after it is removed from the fluid. The adhesion values shall meet the requirement of 3.4.2.

4.7.9.7 Nonvolatile extractable material (see 3.4.2.7). Test samples when tested for nonvolatile extractable material shall meet the requirements of 3.4.2.7. The test shall be performed in duplicate and results averaged. The following details shall apply

a. Each specimen shall consist of strips about 1/16-inch square by 2 inches long, totaling about 5 grams in weight, cut from buffed pieces of the tube of the hose.
b. The specimens shall be weighed and placed in an extraction thimble in the extraction apparatus in accordance with ASTM D297.
c. 100 ml (milliliters) of ASTM reference fuel A in accordance with ASTM D471 shall be added to the flask.
d. The specimen shall be extracted for 46 ±1/2 hours at such a rate that 2-1/2 to 3-1/2 minutes are required to fill the empty extraction cup.
e. The extract shall be poured into a weighed container.
f. The specimen and flask shall be rinsed with 25 ml; of fresh reference fuel A and the wash added to the extract.

g. The nonvolatile residue shall be determined from the extract in accordance with ASTM D381, except that the evaporation time shall be 45 minutes.
h. The weight of the residue shall be expressed as percent of the original weight of the specimen.

4.7.9.8 Phosphate plasticizer test (see 3.4.2.8). Phosphate plasticizer shall be determined qualitatively when tested in accordance with FED-STD-601, method 15825 and shall meet the requirements of 3.4.2.8. The following details shall apply:

a. Using a small piece of clean sodium about the size of a pea, a test tube about 3 inches (7.6 cm) long, and the specimens of the residue remaining after the nonvolatile extractable material test specified in 4.7.9.7.
b. The procedure shall be repeated if phosphorus is found, omitting addition of the nonvolatile extractable material in order to determine whether phosphorus was present in any form in any of the reagents used.

4.7.9.9 Resistance to ozone (see 3.4.2.9). A sample of the cover shall be tested for ozone resistance in accordance with ASTM D1149, except that after conditioning for 24 hours in a ozone-free atmosphere, the looped sample shall be exposed to 166 ±1/2 hours at 100°F ±2ºF (37.8°C ±1.11°C) to an atmosphere containing 100 parts of ozone per hundred million parts of air by volume. The sample shall meet the requirements of 3.4.2.9.

4.7.9.10 Low temperature bend test (see 3.4.2.10). Buffed specimens of tube and cover shall be subjected to the low temperature bend test in accordance with ASTM D380. The test specimens shall be held at -25°F ±2ºF (-31.7°C ±1.11°C) for 72 hours prior to flexing. Evidence of cracking of the test specimens shall be cause for rejection.

4.7.10 Hose support ring test (see 3.6.9). Hose support ring test for the 6-inch (15.2 cm) hose couplings will be based on the following test:

a. Using a universal tensile testing machine, a tensile testing harness will be prepared so that the bearing surface for the ring is circular having a maximum diameter of 6.89 inches (17.5 cm).
   (1) The bearing surface shall be held the testing machine so that when loaded it will not rotate or skew to one side.
   (2) A swivel hook with a latch (with a working load rating of 4 tons (3.63 Mg)) will be attached to one of the line attachment points on the ring.
   (3) The swivel will be attached to a 2-foot (61.cm) long, 5/8-inch (15.88 mm) wire rope sling using a shackle (with a working load rating of 4 tons).
   (4) The other end of the sling should be attached to the testing machine in a safe and appropriate manner.
b. Gradually load the ring to 6,000 lbs (2.72 Mg). Gradually release the load. Repeat this operation nine additional times (total of 10 complete cycles).
c. Load the ring to 6,000 lbs (2.72 Mg) and hold the load for 15 minutes.
d. Release the load and examine the ring.
e. Measure the change in the inner diameter of the ring. The change allowed shall be in accordance with 3.6.9.

5. PACKAGING

5.1 Packaging. For acquisition purposes, the packaging requirements shall be as specified in the contract or order (see 6.2). When actual packaging of materiel is to be performed by DoD personnel, these personnel need to contact the responsible packaging activity to ascertain requisite packaging requirements. Packaging requirements are maintained by the Inventory Control Point's packaging activity within the Military Department or Defense Agency, or within the Military Department's System Command. Packaging data retrieval is available from the managing Military Department's or Defense Agency's automated packaging files, CD-ROM products, or by contacting the responsible packaging activity.

6. NOTES

(This section contains information of a general or explanatory nature that may be helpful, but is not mandatory.)

6.1 Intended use. Hose covered by this specification is intended for transfer of oil and gasoline as part of a buoyant fueling system.

6.2 Acquisition requirements. Acquisition documents should specify the following:

a. Title, number, and date of this specification.

b. PIN (see 1.2).

c. Quantity required.

d. Whether first article inspection is waived (see 4.5.4.3).

e. Lot records if required (see 4.4.1).

f. Name and address of the first article inspection test facility to which first article samples (if required see 4.5.4.3) are to be forwarded and the name and address of the Government activity responsible for conducting the first article inspection program (see 4.5 and 6.3).

g. Packaging requirements (see 5.1).

h. Shelf life requirements (see 6.4).

6.3 First article. The contracting officer should include specific instructions in acquisition documents regarding arrangements for examinations, approval of first article test results, and disposition of first article samples. Invitations for bids should provide that the Government reserves the right to waive the requirement for samples for first article inspection to those bidders offering a product which has been previously acquired or tested by the Government, and that bidders offering such products, who wish to rely on such production or test, must furnish evidence with the bid that prior Government approval is presently appropriate for the pending contract.

6.3.1 Defense Logistics Agency (DLA) waiver of first article test. A waiver of a first article testing will only be considered by DLA when the contractor has delivered the same item within the last three years, has no unfavorable quality history, has not changed processes, or changed any subcontractors. DLA will not accept first article testing results outside the stated requirements.

6.4 Shelf life. This specification covers items where shelf life is a consideration. Specific shelf-life requirements should be specified in the contract or purchase order. The shelf-life codes are contained in the Federal Logistics Information System Total Item Record. Additive information for shelf-life management may be obtained from DoD 4140.27-M, Shelf-life Management Manual, or the designated shelf-life Points of Contact (POC). The POC should be contacted in the following order. (1) The Inventory Control Points (ICPs), and (2) the DoD Service and Agency Administrators for the DoD Shelf-Life Program. Appropriate POCs for DoD Shelf-Life Program can be contacted through the DoD Shelf-Life Management website: http://www.shelflife.hq.dla.mil/.

6.5 Subject term (key word) listing).

Fueling
Hydrostatic
Ozone
Support ring

6.6 Environmentally preferable material. Environmentally preferable materials should be used to the maximum extent possible to meet the requirements of this specification. Table IV lists the Environmental Protection Agency (EPA) top seventeen hazardous materials targeted for major usage reduction. Use of these materials should be minimized or eliminated unless needed to meet the requirements specified herein (see section 3).

TABLE IV. EPA top seventeen hazardous materials.

Benzene	Dichloromethane	Tetrachloroethylene
Cadmium and Compounds	Lead and Compounds	Toluene
Carbon Tetrachloride	Mercury and Compounds	1,1,1 - Trichoroethane
Chloroform	Methyl Ethyl Ketone	Trichloroethylene
Chromium and Compounds	Methyl Isobutyl Ketone	Xylenes
Cyanide and Compounds	Nickel and Compounds	

6.7 Changes from previous issues. The margins of this specification are marked with vertical lines to indicate where changes from the previous issue were made. This was done as a convenience only and the Government assumes no liability whatsoever for any inaccuracies in these notations. Bidders and contractors are cautioned to evaluate the requirements of this document based on the entire content irrespective of the marginal notations and relationship to the last previous issue.

CONCLUDING MATERIAL

Custodians:
Navy - YD
DLA - CC

Review activities:
Navy - CG, MC, SA, SH

Preparing activity:
DLA - CC

(Project: 4720-2016-003)

NOTE: The activities listed above were interested in this document as of the date of this document. Since organizations and responsibilities can change, you should verify the currency of the information above using the ASSIST Online database at https://assist.dla.mil.