INCH - POUND

MS27336G
31 August 2010
SUPERSEDING
MS27336F
20 May 2005

DETAIL SPECIFICATION SHEET

CONNECTORS, PLUG, ELECTRICAL, STRAIGHT, SOLDER TYPE, BAYONET COUPLING, CLASSES P AND T, SERIES II

Inactive for new design after 7 December 1998.

This specification is approved for use by all Departments and Agencies of the Department of Defense.

The requirements for acquiring the product described herein shall consist of this specification sheet and MIL-DTL-27599.

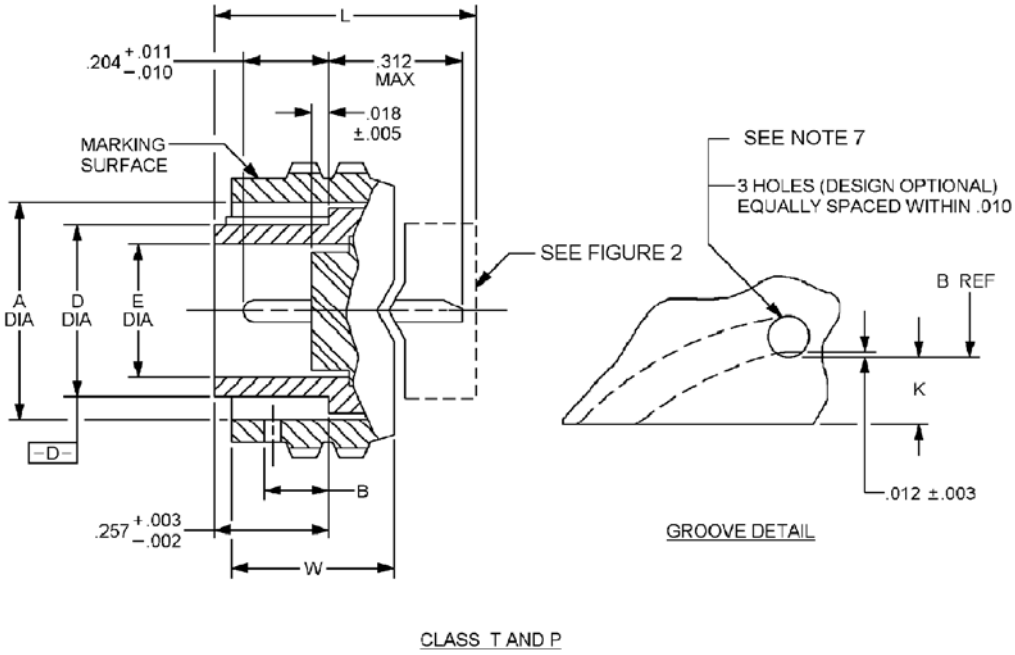

FIGURE 1. Plug, straight.

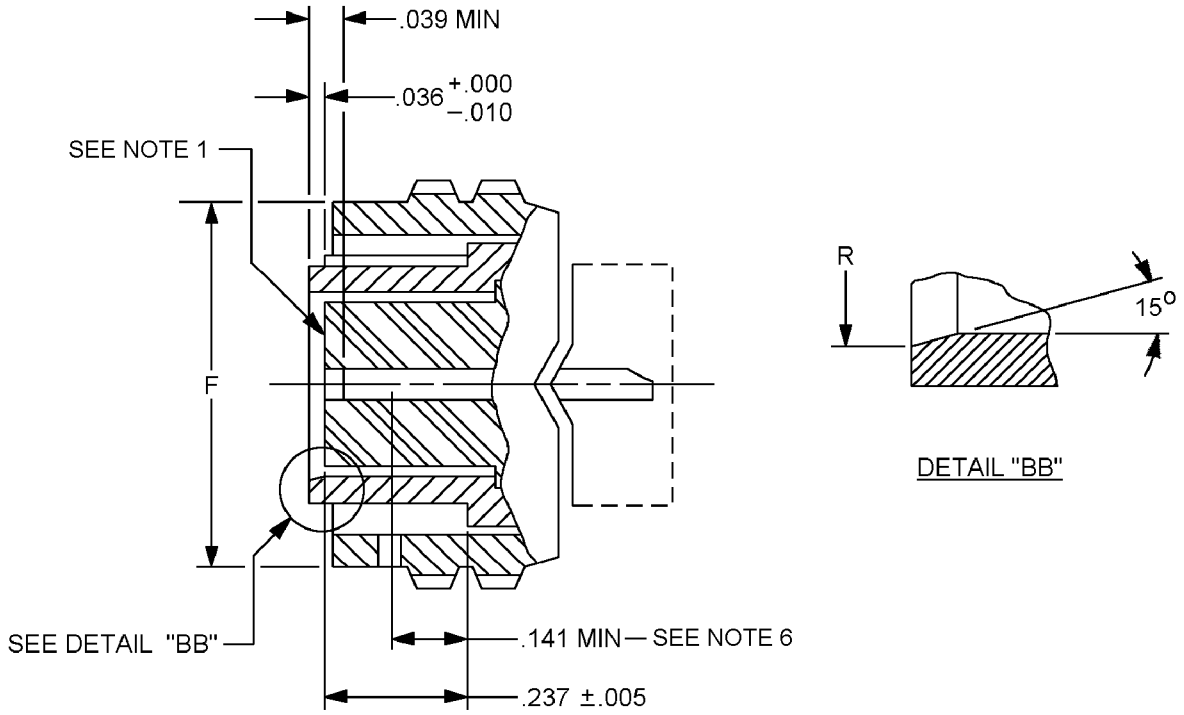

CLASS T AND P

FIGURE 1. Plug, straight - Continued.

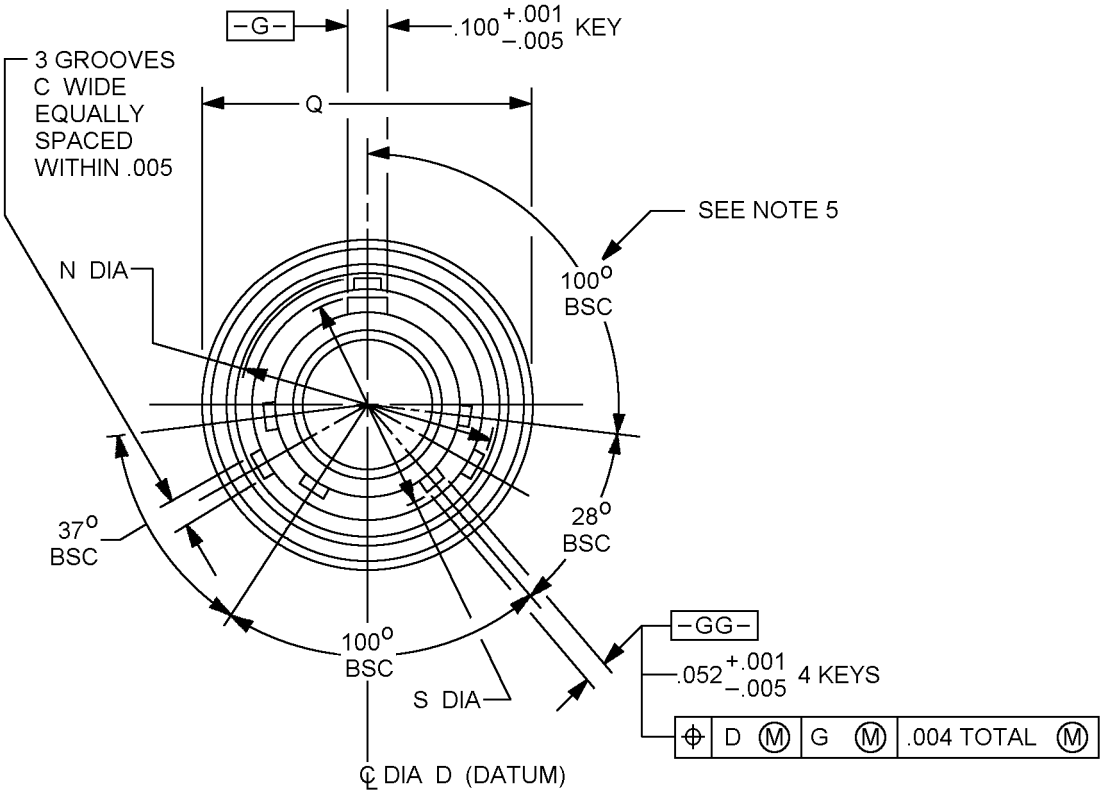

CLASS T AND P

FIGURE 1. Plug, straight - Continued.

Inches	mm	Inches	mm	Inches	mm	Inches	mm
0.001	0.0254	0.01	0.254	0.039	0.991	0.237	6.02
0.002	0.0508	0.011	0.279	0.052	1.321	0.257	6.528
0.003	0.0762	0.012	0.305	0.100	2.540	0.312	7.925
0.004	0.1016	0.018	0.457	0.141	3.581		
0.005	0.1270	0.036	0.914	0.204	5.182		

NOTES:

1. Insert front surface shall be flat within .005 T.I.R.
2. Diameter D with respect to diameter S shall be concentric at MMC.
3. Diameters A and N shall be concentric within .008 (.203) T.I.R.
4. Dimensions are in inches. Metric equivalents are given for information only.
5. Normal keyway position. For other keyway positions, see MIL-DTL-27599.
6. The point at which a gauge pin having the same basic diameter as the mating contact and a square face, touches socket contact spring.
7. Holes shall be provided for visual inspection of lock when mated with receptacle.

FIGURE 1. Plug, straight – Continued.

TABLE I. Dimensions. 1/ 2/

Shell size	A dia + .005 - .001	B ± .020	C + .015 - .001	D dia + .001 - .005	E min dia	F dia + .000 - .006
8	.481 (12.22)	.096 (2.44)	.090 (2.28)	.357 (9.07)	.306 (7.77)	.630 (16.00)
10	.602 (15.29)			.485 (12.32)	.423 (10.74)	.752 (19.10)
12	.761 (19.33)			.597 (15.16)	.537 (13.64)	.925 (23.49)
14	.885 (22.48)			.722 (18.34)	.662 (16.81)	1.050 (26.67)
16	1.010 (25.65)			.847 (21.51)	.787 (19.99)	1.172 (29.77)
18	1.136 (28.85)			.947 (24.05)	.876 (22.25)	1.304 (33.12)
20	1.260 (32.00)	.123 (3.12)	.137 (3.48)	1.072 (27.23)	1.001 (25.42)	1.435 (36.45)
22	1.385 (35.18)			1.197 (30.40)	1.126 (28.60)	1.560 (39.62)
24	1.510 (38.35)			1.322 (33.58)	1.251 (31.77)	1.688 (42.87)

See notes at end of table.

TABLE I. Dimensions - Continued. 1/ 2/

Shell size	K max ref	N dia + .010 - .006	Q max dia	R dia + .005 - .006	S + .001 - .010	W ± .015
8	.155 (3.94)	.576 (14.63)	.750 (19.05)	.316 (8.03)	.402 (10.21)	.547 (13.89)
10		.697 (17.70)	.859 (21.82)	.436 (11.07)	.530 (13.46)	
12		.871 (22.12)	1.031 (26.19)	.549 (13.94)	.679 (17.24)	
14		.995 (25.27)	1.156 (29.36)	.675 (17.14)	.804 (20.42)	
16		1.120 (28.45)	1.281 (32.53)	.799 (20.29)	.929 (23.59)	
18		1.245 (31.62)	1.406 (35.71)	.893 (22.68)	1.029 (26.13)	
20	.109 (2.77)	1.370 (34.80)	1.531 (38.88)	1.018 (25.86)	1.154 (29.31)	.524 (13.31)
22		1.495 (37.97)	1.641 (41.68)	1.143 (29.03)	1.279 (32.48)	
24		1.624 (41.25)	1.766 (44.85)	1.268 (32.20)	1.404 (35.66)	.575 (14.60)

1/ Dimensions are in inches.
2/ Metric equivalents are given for information only.

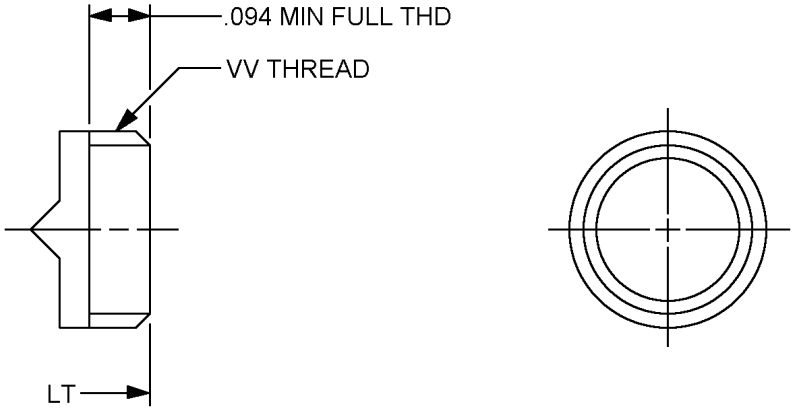

CLASS T

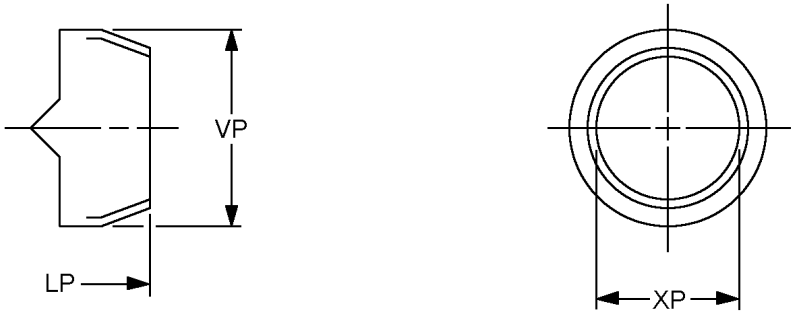

CLASS P

FIGURE 2. Plug, straight, rear accessory areas.

TABLE II. Dimensions (rear accessory). 1/ 2/

Shell size	LT max overall length	VV thread UNEF-2A MOD (Plated)		LP max	XP min	VP max
		size	major dia MOD			
8	.625 (15.87)	.4375 - 28	.421 - .417 (10.69 – 10.60)	.797 (20.24)	.317 (8.05)	.531 (13.48)
10		.5625 - 24	.542 - .538 (13.76 – 13.66)		.434 (11.02)	.641 (16.28)
12		.6875 - 24	.667 - .663 (16.94 – 16.84)		.548 (13.92)	.766 (19.45)
14		.8125 - 20	.791 - .787 (20.09 – 19.98)		.673 (17.09)	.891 (22.63)
16		.9375 - 20	.916 - .912 (23.26 – 23.16)		.798 (20.27)	1.016 (25.80)
18		1.0625 - 18	1.034 - 1.030 (26.26 – 26.16)		.899 (22.83)	1.125 (28.57)
20		1.1875 - 18	1.158 - 1.154 (29.41 – 29.31)		1.024 (26.01)	1.250 (31.75)
22		1.3125 - 18	1.283 - 1.279 (32.58 – 32.48)		1.149 (29.18)	1.375 (34.92)
24	.703 (17.85)	1.4375 - 18	1.408 - 1.404 (35.76 – 35.66)	.875 (22.22)	1.274 (32.36)	1.500 (38.10)

1/ Dimension are in inches.
2/ Metric equivalents are given for information only.

REQUIREMENTS:

Dimensions and configurations: See figures 1 and 2 and tables I and II.

This connector mates with MS27334, MS27335 and MS27337.

Insert arrangement shall be in accordance with MIL-STD-1560.

Part or Identifying Number (PIN) example:

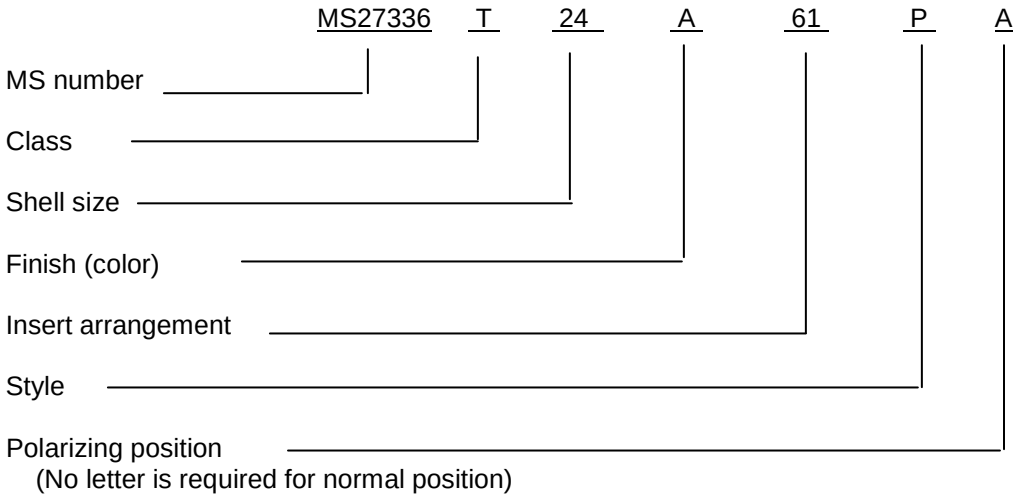

Changes from previous issue. Marginal notations are not used in this revision to identify changes with respect to the previous issue due to the extent of the changes.

Referenced documents. In addition to MIL-DTL-27599, this document references the following:

MIL-STD-1560
MS27334
MS27335
MS27337

CONCLUDING MATERIAL

Custodians:
Air Force - 85
DLA - CC

Preparing activity:
DLA - CC

Review activities:
Air Force - 99
DLA - IS

(Project 5935-2010-140)

NOTE: The activities listed above were interested in this document as of the date of this document. Since organizations and responsibilities can change, you should verify the currency of the information above using the ASSIST Online database at https://assist.daps.dla.mil.