INCH - POUND

MS27334E
31 August 2010
SUPERSEDING
MS27334D
20 May 2005

DETAIL SPECIFICATION SHEET

CONNECTORS, RECEPTACLE, ELECTRICAL, WALL MOUNTING FLANGE, SOLDER TYPE, BAYONET COUPLING, CLASSES P AND T, SERIES II

Inactive for new design after 7 December 1998.

This specification is approved for use by all Departments and Agencies of the Department of Defense.

The requirements for acquiring the product described herein shall consist of this specification sheet and MIL-DTL-27599.

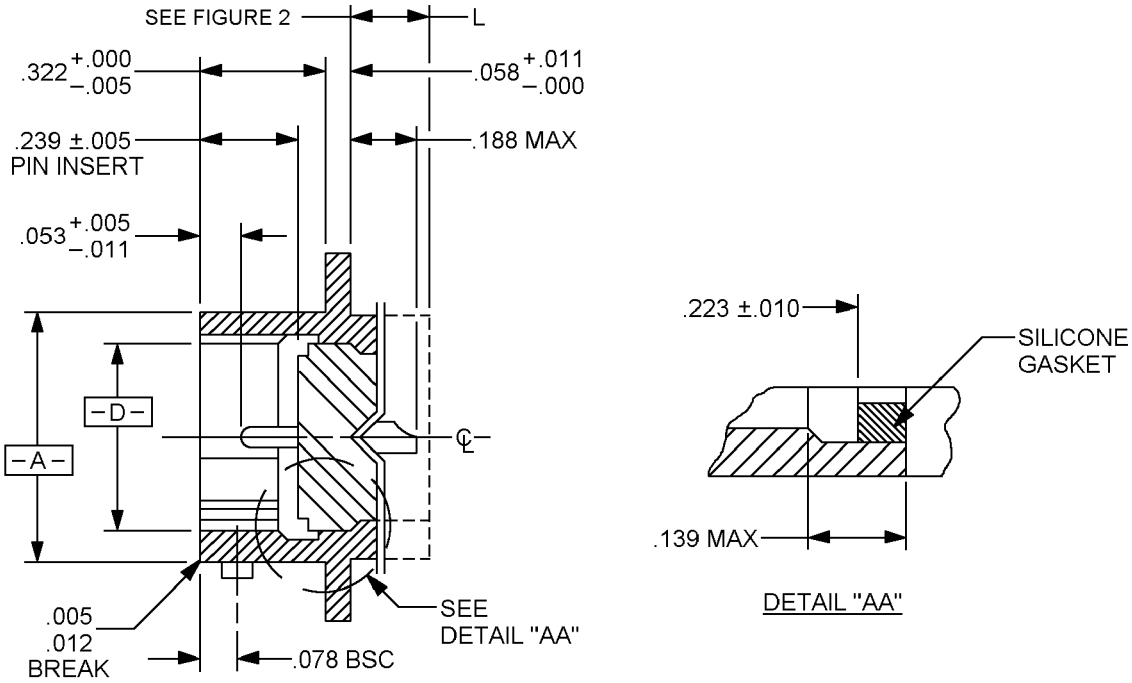

CLASS T AND P

FIGURE 1. Receptacle, wall mount flange.

AMSC N/A

FSC 5935

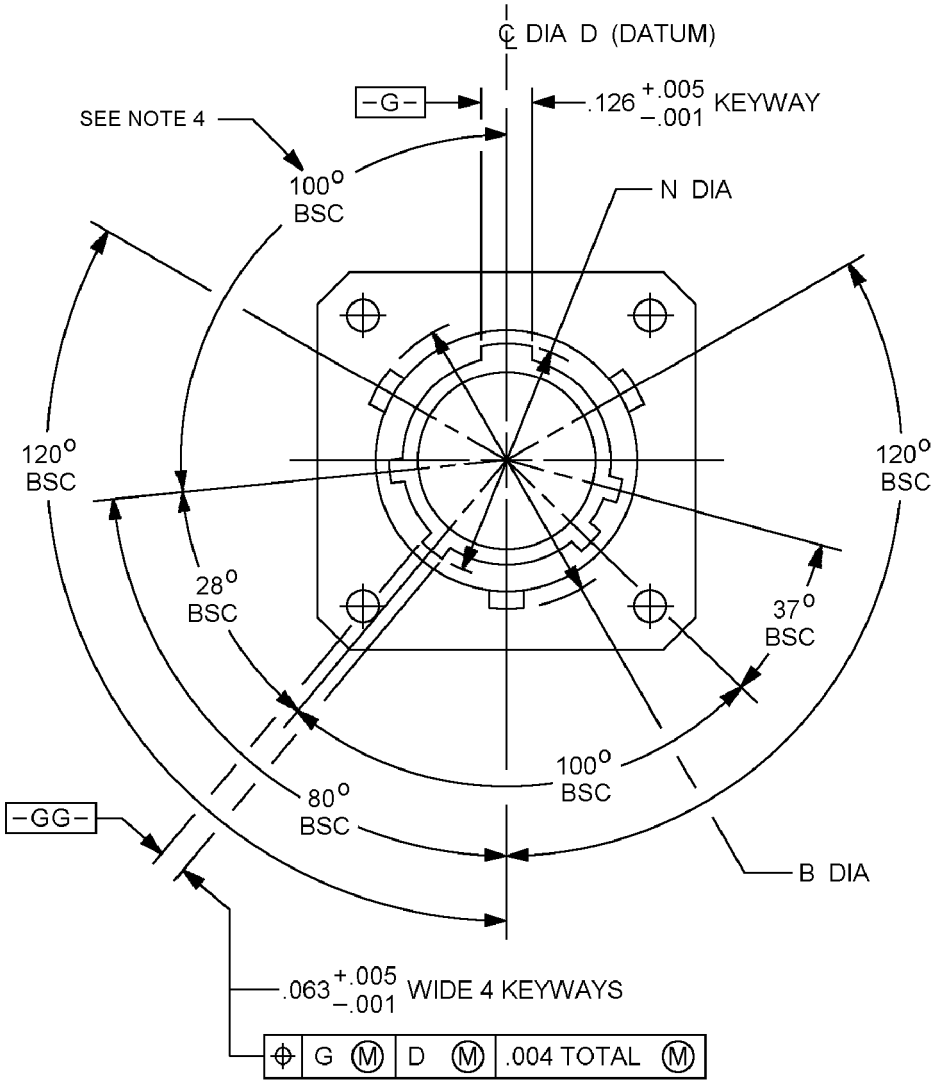

CLASS T AND P

FIGURE 1. Receptacle, wall mount flange - Continued.

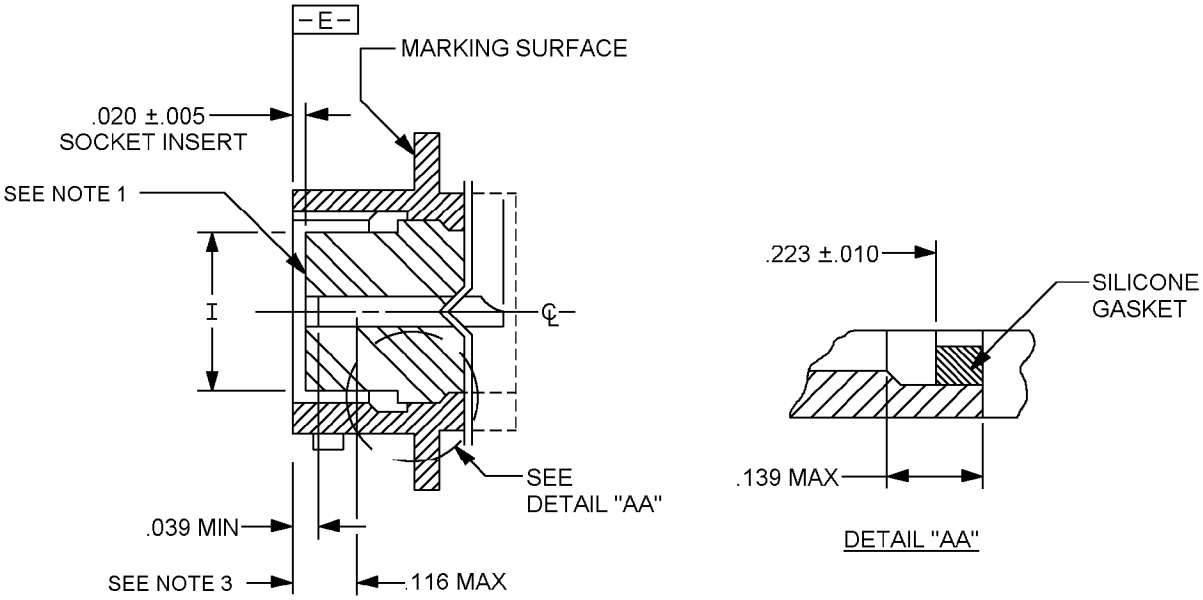

CLASS T AND P

FIGURE 1. Receptacle, wall mount flange - Continued.

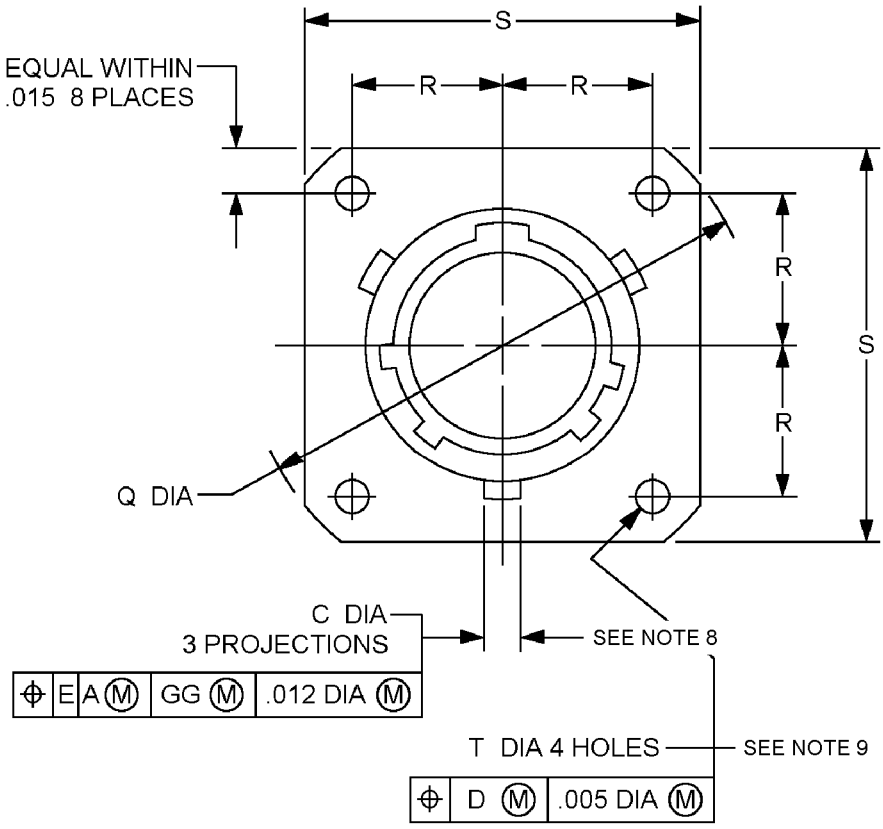

CLASS T AND P

FIGURE 1. Receptacle, wall mount flange - Continued.

Inches	mm	Inches	mm	Inches	mm	Inches	mm
0.001	0.0254	0.012	0.305	0.058	1.473	0.139	3.531
0.004	0.1016	0.015	0.381	0.063	1.600	0.188	4.775
0.005	0.127	0.02	0.508	0.078	1.981	0.223	5.664
0.010	0.254	0.039	0.991	0.116	2.947	0.239	6.071
0.011	0.279	0.053	1.346	0.126	3.200	0.322	8.179

NOTES:

1. Insert front surface shall be flat within .005 T.I.R.
2. Dimensions are in inches. Metric equivalents are given for information only.
3. The point at which a gauge pin having the same basic diameter as the mating contact and a square face, touches socket contact spring.
4. Normal keyway position. For other keyway positions, see MIL-DTL-27599.
5. Diameters A and D shall be concentric within .015 T.I.R.
6. Diameter A with respect to diameter B, and diameter D with respect to diameter N, shall be concentric at MMC.
7. Diameters D and I shall be concentric within .005 T.I.R. at MMC.
8. The gauge features for GG shall be CC smaller than their MMC size at basic location.
9. The gauge features for GG shall be .010 smaller than their MMC size at basic location.

FIGURE 1. Receptacle, wall mount flange - Continued.

TABLE I. Dimensions. 1/ 2/

Shell size	A dia + .001 - .005	B dia + .000 - .016 over projections	C dia + .006 - .002	D dia + .005 - .001	I dia ± .005	N dia + .005 - .006
8	.473 (12.01)	.563 (14.30)	.078 (1.98)	.362 (9.19)	.296 (7.52)	.412 (10.46)
10	.590 (14.98)	.680 (17.27)		.490 (12.44)	.413 (10.49)	.540 (13.71)
12	.750 (19.05)	.859 (21.82)		.607 (15.42)	.527 (13.38)	.689 (17.50)
14	.875 (22.22)	.984 (25.00)		.732 (18.59)	.652 (16.56)	.814 (20.67)
16	1.000 (25.40)	1.108 (28.14)		.857 (21.77)	.777 (19.73)	.939 (23.85)
18	1.125 (28.57)	1.233 (31.32)		.962 (24.43)	.866 (22.00)	1.039 (26.39)
20	1.250 (31.75)	1.358 (34.49)	.125 (3.175)	1.087 (27.60)	.991 (25.17)	1.164 (29.56)
22	1.375 (34.92)	1.483 (37.67)		1.212 (30.78)	1.116 (28.34)	1.289 (32.74)
24	1.500 (38.10)	1.610 (40.89)		1.337 33.96)	1.241 (31.52)	1.414 (35.91)

See notes at end of table.

TABLE I. Dimensions - Continued. 1/ 2/

Shell size	Q max	R BSC	S max	T + .010 - .005	CC
8	1.078 (27.38)	.297 (7.54)	.828 (21.03)	.120 (3.05)	.004 (.102)
10	1.266 (32.15)	.3595 (9.1313)	.954 (24.23)		.010 (.254)
12	1.391 (35.33)	.406 10.31)	1.047 (26.59)		
14	1.516 (38.50)	.453 (11.50)	1.141 (28.98)		
16	1.641 (41.68)	.4845 (12.30)	1.234 (31.34)		
18	1.766 (44.85)	.531 (13.48)	1.328 (33.73)		
20	1.891 (48.03)	.578 (14.68)	1.453 (36.90)		
22	2.016 (51.20)	.625 (15.87)	1.578 (40.08)		
24	2.204 (55.98)	.6875 (17.46)	1.703 (43.25)	.147 (3.73)	

1/ Dimensions are in inches.
2/ Metric equivalents are given for information only.

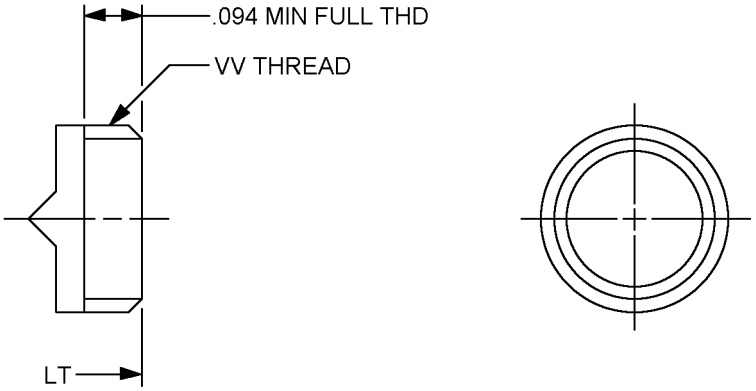

CLASS T

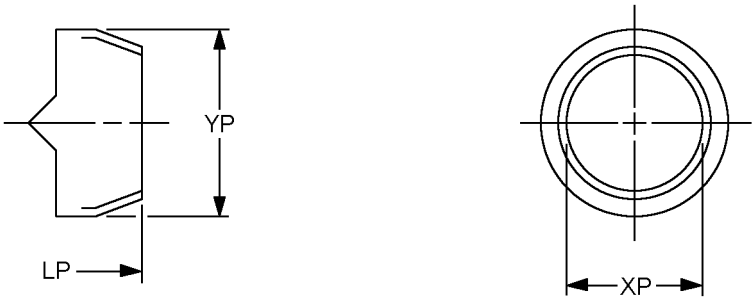

CLASS P

FIGURE 2. Receptacle, rear accessory areas.

TABLE II. Dimensions (rear accessory) - Continued. 1/ 2/

Shell size	LT max	VV thread UNEF-2A MOD (plated)		LP max	XP min dia	YP max dia
		Size	Major dia MOD			
8	.250 (6.35)	.4375 - 28	.421 - .417 (10.69 – 10.60)	.453 (11.50)	.317 (8.05)	.531 (13.48)
10		.5625 - 24	.542 - .538 (13.76 – 13.66)		.434 (11.02)	.641 (16.28)
12		.6875 - 24	.667 - .663 (16.94 – 16.84)		.548 (13.92)	.766 (19.45)
14		.8125 - 20	.791 - .787 (20.09 – 19.98)		.673 (17.09)	.891 (22.63)
16		.9375 - 20	.916 - .912 (23.26 – 23.16)		.798 (20.27)	1.016 (25.80)
18		1.0625 - 18	1.034 - 1.030 (26.26 – 26.16)		.899 (22.83)	1.125 (28.57)
20		1.1875 - 18	1.158 - 1.154 (29.41 – 29.31)		1.024 (26.01)	1.250 (31.75)
22		1.3125 - 18	1.283 - 1.279 (32.58 – 32.48)		1.149 (29.18)	1.375 (34.92)
24	.328 (8.33)	1.4375 - 18	1.408 - 1.404 (35.76 – 35.66)	.531 (13.48)	1.274 (32.36)	1.500 (38.10)

1/ Dimensions are in inches.
2/ Metric equivalents are given for information only.

REQUIREMENTS

Dimensions and configurations: See figures 1 and 2 and tables I and II.

This connector mates with MS27336.

Insert arrangement shall be in accordance with MIL-STD-1560.

Part or Identifying Number (PIN) example:

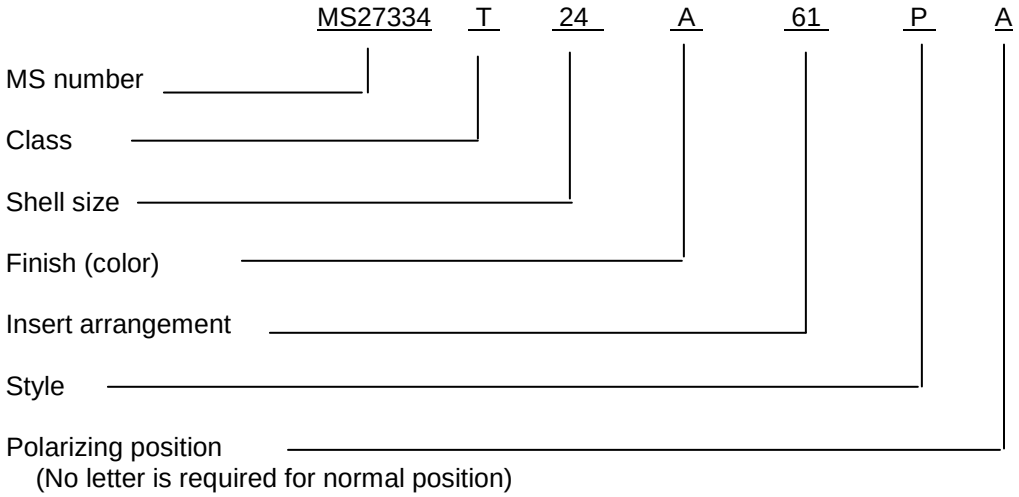

Changes from previous issue. Marginal notations are not used in this revision to identify changes with respect to the previous issue due to the extent of the changes.

Reference documents. In addition to MIL-DTL-27599, this document references the following:

MIL-STD-1560
MS27336

CONCLUDING MATERIAL

Custodians:
Air Force - 85
DLA - CC

Review activities:
Air Force - 99
DLA - IS

Preparing activity:
DLA - CC

(Project 5935-2010-100)

NOTE: The activities listed above were interested in this document as of the date of this document. Since organizations and responsibilities can change, you should verify the currency of the information above using the ASSIST Online database at https://assist.daps.dla.mil.