INCH-POUND

MIL-DTL-27599E
28 April 2016
SUPERSEDING
MIL-DTL-27599D
21 July 2008

DETAIL SPECIFICATION

CONNECTORS, ELECTRICAL, CIRCULAR, MINIATURE, HIGH DENSITY, QUICK DISCONNECT, ENVIRONMENT RESISTANT, SOLDER CONTACTS, GENERAL SPECIFICATION FOR

Inactive for new design after 7 December 1998.

This specification is approved for use by all Departments and Agencies of the Department of Defense.

1. SCOPE

1.1 Scope. This specification covers two series of miniature, high density, quick disconnect, bayonet coupling, circular, environment resistant, electrical connectors capable of continuous operation within a temperature range of -65ºC to +175ºC (see 6.1). These connectors are intermateable with applicable series I and series II connectors of MIL-DTL-38999. These connectors are supplied under a MIL-STD-790 reliability assurance program. See 6.1 for restrictions on intended use and applications.

1.1.1 Part or Identifying Number.

MS20026 T 15 A 18 P A

- MS number
- Class (see 1.3.1c)
- Shell size
- Finish (see 1.3.1d and 3.4.7.2)
- Insert arrangement (see MIL-STD-1560)
- Contact style (see 1.3.1e)
- Polarizing position (see figure 7)

Note: For the normal position only, no letter designator is marked on the part, and no letter designator is included in the PIN to indicate the “normal” position.)

Comments, suggestions, or questions on this document should be addressed to DLA Land and Maritime - VAI, P.O. Box 3990, Columbus OH 43218-3990 or emailed to CircularConnector@dla.mil. Since contact information can change, you may want to verify the currency of this address information using the ASSIST Online database at https://assist.dla.mil.

AMSC N/A FSC 5935

1.2 Description. Both series employ fixed pin and socket contacts with solder termination. Both series are designed to ensure proper orientation of the mating halves prior to electrical circuit closure. Both series provide EMI shielding capability. Series I provides electrical continuity between mated shells prior to contact engagement and have the contacts so located as to be protected from handling damage and inadvertent electrical contact. Series II features a low silhouette for minimum size and weight and includes connectors which provide shell-to-shell electrical continuity when mated.

1.2.1 Design considerations. Connectors are capable of satisfactory performance during or after, as applicable, subjection to the following environmental conditions:

1.2.2 Temperature. Temperatures from -65°C to +175°C (see 1.3.1d).

1.2.3 Vibration. Vibration from 10 to 2,000 Hz sinusoidal at 10 g's at ambient temperature.

1.2.4 Shock. Shock as represented by a 3 ± 1 milliseconds base half-sine wave peaking at 30 g's.

1.2.5 Humidity. Humidity conditions up to 98 percent relative humidity including condensation.

1.2.6 Temperature cycling (see 4.6.2).

1.2.7 EMI shielding. EMI shielding effectiveness:

Series I: 100 MHz to 1 GHz – minimum attenuation of 85 dB.
Series II: 100 MHz to 1 GHz – minimum attenuation of 45 dB.

1.3 Classification.

1.3.1 Connectors. Connectors fabricated to this specification are classified as follows:

a. Series. The series I and II connectors are not interchangeable or intermateable.

I – Scoop-proof.
II – Non-scoop-proof, low silhouette.

b. Types:

(1) Plugs:
Straight, without spring fingers.
Straight, with spring fingers that make shell contact prior to contact engagement.
Straight, with spring fingers that make shell contact after contacts engage.

(2) Receptacles:
Box mounting, both front and rear panel mounting.
Wall mounting, both front and rear panel mounting.
Jam-nut mounting.

c. Classes:

P – For potting: Includes potting form.
T – General duty: Pressurized (receptacles only).

d. Temperature ranges:

Finishes:

A – Bright cadmium plate over nickel (conductive) -65°C to +150°C.
B – Olive-drab cadmium plate over suitable underplate (conductive) -65°C to +175°C.
T – Nickel fluorocarbon polymer (conductive) -65°C to +175°C.
Z – Zinc nickel alloy (conductive) -65°C to +175°C .

e. Contact styles:

P – Pin contacts, solder cups.
S – Socket contacts, solder cups.

2. APPLICABLE DOCUMENTS

2.1 General. The documents listed in this section are specified in sections 3 and 4 of this specification. This section does not include documents cited in other sections of this specification or recommended for addition information or as examples. While every effort has been made to ensure the completeness of this list, document users are cautioned that they must meet all specified requirements documents cited in sections 3 and 4 of this specification, whether or not they are listed.

2.2 Government documents.

2.2.1 Specifications, standards, and handbooks. The following specifications, standards, and handbooks form a part of this document to the extent specified herein. Unless otherwise specified, the issues of these documents are those cited in the solicitation or contract.

FEDERAL STANDARD

FED-STD-H28	-	Screw-Thread Standards for Federal Services

DEPARTMENT OF DEFENSE SPECIFICATIONS

MIL-S-7742	-	Screw Threads, Standard, Optimum Selected Series: General Specification for
MIL-R-25988/3	-	Rubber, Fluorosilicone Elastomer, Oil- and Fuel-Resistant, O-rings, Class 1, Grade 60
MIL-DTL-45204	-	Gold Plating, Electrodeposited
MIL-A-46146	-	Adhesive-sealants, Silicone, RTV, Non-Corrosive (for use with Sensitive Metals and Equipment)

DEPARTMENT OF DEFENSE STANDARDS

MIL-STD-790	-	Established Reliability and High Reliability Qualified Products List (QPL) Systems for Electrical, Electronic, and Fiber Optic Parts Specifications.
MIL-STD-810	-	Environmental Engineering Considerations and Laboratory Tests
MIL-STD-889	-	Dissimilar Metals
MIL-STD-1560	-	Insert Arrangements for MIL-DTL-38999, MIL-DTL-27599 and SAE-AS29600 Series A Electrical Circular Connectors
MS3186	-	Connector, Mounting to Connectors, Mounting Nuts, Plain Hexagon
MS20029	-	Connector, Receptacle, Electric, Jam Nut Mounting, Solder Type, Bayonet Coupling, Class P, Series I
MS27512	-	Connectors, Electrical, Circular, Nut, Hexagon, Connector Mounting, for MIL-DTL-38999, MIL-DTL-27599 and SAE-AS29600 Series A Electrical Circular Connectors

(See supplement 1 for list of specification sheets.)

(Copies of these documents are available online at http://quicksearch.dla.mil.)

2.3 Non-Government publications. The following documents form a part of this document to the extent specified herein. Unless otherwise specified, the issues of these documents are those cited in the solicitation or contract.

ASTM INTERNATIONAL

ASTM D570	-	Plastic, Water Absorption of
ASTM B841	-	Standard Specification for Electrodeposited Coatings of Zinc Nickel Alloy Deposits

(Copies of these documents are available at http://www.astm.org.)

ELECTRONIC COMPONENTS INDUSTRY ASSOCIATION (ECIA)

EIA-364	-	Electrical Connector/Socket Test Procedures Including Environment Classifications
EIA-364-02	-	Air Leakage Test Procedure for Electrical Connectors
EIA-364-06	-	Contact Resistance Test Procedure for Electrical Connectors
EIA-364-20	-	Connectors, Sockets and Coaxial Contacts, Electrical, Withstanding Voltage Test Procedures For
EIA/ECA-364-21	-	Insulation Resistance Test Procedure for Electrical Connectors, Sockets, and Coaxial Contacts
EIA/ECA-364-25	-	Probe Damage Test Procedure for Electrical Connectors
EIA/ECA-364-26	-	Connectors, Contacts and Sockets, Electrical, Salt Spray Test Procedure For
EIA-364-28	-	Connectors and Sockets, Electrical, Vibration Test Procedure for
EIA-364-31	-	Connectors and Sockets, Electrical, Humidity Test Procedure for
EIA-364-32	-	Connectors and Sockets, Electrical, Thermal Shock (Temperature Cycling) Test Procedure For
EIA-364-35	-	Connectors, Electrical, Insert Retention Test Procedure For
EIA-364-37	-	Contact Engagement and Separation Force Test Procedure for Electrical Connectors
EIA-364-54	-	Connectors, Contacts, and Sockets, Electrical, Magnetic Permeability Test Procedure For
EIA/ECA-364-83	-	Shell-To-Shell and Shell-To-Bulkhead Resistance Test Procedure for Electrical Connectors

(Copies of these documents are available at http://ecianow.org.)

INTERNATIONAL ORGANIZATION FOR STANDARDIZATION (ISO)

ISO 17025	-	General Requirements for the Competence of Testing and Calibration Laboratories

(Copies of these documents are available at http://www.ansi.org.)

NCSL INTERNATIONAL

NCSL Z540.3 Requirements for the Calibration of Measuring and Test Equipment

(Copies of these documents are available online at http://www.ncsli.org.)

SAE INTERNATIONAL

SAE-AMS-QQ-P-416	-	Plating, Cadmium (Electrodeposited)
SAE-AMS2454	-	Plating, Electroless Nickel, Codeposited with Polytetrafluoroethylene (PTFE)
SAE-AIR4789	-	Evaluating Corrosion Testing of Electrical Connectors and Accessories For the Purpose of Qualification
SAE-AS22759	-	Wire, Electrical, Fluoropolymer-Insulated, Copper or Copper Alloy
SAE-AS31971	-	Pin, Gage, for Socket Contact Engagement Test
SAE-AS39029	-	Contact, Electrical Connector, General Specification for

(Copies of these documents are available at http://standards.sae.org.)

2.4 Order of precedence. Unless otherwise noted herein or in the contract, in the event of a conflict between the text of this document and the references cited herein (except for related specification sheets), the text of this document takes precedence. Nothing in this document, however, supersedes applicable laws and regulations unless a specific exemption has been obtained.

3. REQUIREMENTS

3.1 Specification sheets. The individual item requirements shall be as specified herein and in accordance with the applicable specification sheet. In the event of any conflict between the requirements of this specification and the specification sheet, the latter shall govern.

3.2 Qualification. Both connector series furnished under this specification shall be products that are authorized by the qualifying activity for listing on the applicable qualified products list before contract award (see 4.4 and 6.3).

3.2.1 Reliability. The contractors reliability program for assembled connectors and assembly procedures shall meet the requirements of MIL-STD-790.

3.3 Materials.

3.3.1 Metals. Metals shall be of a corrosion-resistant type or shall be plated or treated to resist corrosion.

3.3.1.1 Dissimilar metals and compatible couples. When dissimilar metals are used in intimate contact with each other, protection against galvanic corrosion shall be provided. The use of dissimilar metals in contact, which tend toward active galvanic corrosion (particularly brass, copper, or steel used in contact with aluminum or aluminum alloy) is not acceptable. However, metal plating of dissimilar-base metals to provide similar or suitable abutting surfaces is permitted. The use of dissimilar metals separated by a suitable insulating material is also permitted. Dissimilar metals and compatible couples are defined in MIL-STD-889.

3.3.1.2 Hydrolytic stability. When tested as specified in 4.3.2, the connector shall be without defects detrimental to mechanical performance. There shall be no increase in the connector weight greater than 0.75 percent. When subjected to an overtorque at 150 percent of those values specified in table I, there shall be no evidence of cracking, breaking, or loosening of parts.

3.3.1.3 Recycled, recovered, environmentally preferable, or biobased materials. Recycled, recovered, environmentally preferable, or biobased materials should be used to the maximum extent possible, provided that the material meets or exceeds the operational and maintenance requirements, and promotes economically advantageous life cycle costs.

3.3.2 Components. Materials for specific components of the connector shall be as specified (see 3.3.2.1).

3.3.2.1 Classes P and T.

a. Shell: Impact extruded or machined aluminum alloy.
b. Coupling ring, jam-nut, and potting ring: Machined aluminum alloy.
c. Insert: Reinforced epoxy resin or other suitable rigid dielectric material.
d. Contacts: Style P: Copper alloy: Style S: Beryllium copper; hood or sleeve shall be corrosion-resistant steel.
e. Bayonet pins: Corrosion-resistant steel.
f. Spring fingers: Heat-treated beryllium copper.
g. Filler compound: RTV silicone conforming to MIL-A-46146 or equivalent.
h. Gaskets: Silicone or fluorosilicone elastomer.

3.3.3 Fungus resistant. Materials used in the construction of these connectors shall be fungus inert (see 4.3.3).

3.3.4 Nonmagnetic materials. The relative permeability of the wired, assembled, and fully mated connector assembly shall be less than 2.0μ when measured in accordance with 4.6.22.

3.4 Design and construction. Connectors and accessories shall be designed and constructed to withstand normal handling incident to installation and maintenance in service. Connector intermateability control dimensions shall be as specified on figures 1 and 2. Connector accessory interface dimensions shall be as specified on figures 3 and 4. Recommended panel cut-out dimensions are shown on figure 5.

3.4.1 Contacts. Contacts shall be designed for solder termination and shall be molded into inserts. Dimensions for contacts shall be as specified on figure 6.

3.4.1.1 Contact arrangement. Contact arrangement shall be in accordance with MIL-STD-1560. The engaging end of the pin contacts in assembled connectors shall be located within .004 inch diameter of true position and the engaging end of socket contacts in assembled connectors shall be located within .004 inch diameter of true position.

3.4.2 Inserts. Inserts shall be molded in one piece and shall be free from voids or surface irregularities and shall have mold cavity identification. The mold cavity identification number shall appear on the rear face (solder cup) side of the insert. Inserts shall be secured to prevent rotation. Socket insert entry holes shall be as specified on figure 6.

3.4.3 Shell. Shells, including mounting flanges, shall be of one-piece construction and shall be designed to retain their inserts in one position, both axially and with respect to rotation, by mechanical means. Adhesive may be used as a supplementary retention means.

3.4.3.1 Spring fingers. Spring fingers shall be designed to make electrical contact with the mating shell without interfering with proper engagement. The springs shall be retained about the shell periphery. Minimum engagement of the spring fingers shall be .040 inch prior to contact engagement for series I. Spring fingers shall engage the mating shell at .040 inch after contact engagement for series II.

3.4.3.2 Jam-nut mounting receptacles, mounting nut and O-ring. Jam-nut mounting receptacles shall be provided with a mounting nut, MS3186 for series I, MS27512 for series II, all with provisions for locking, and shall be provided with an external O-ring in accordance with MIL-R-25988/3.

3.4.4 Screw threads. Screw threads shall conform to FED-STD-H28 and MIL-S-7742. Threads shall be checked using ring or plug gauges. Slight out-of-roundness beyond the specified tolerances of FED-STD-H28 is acceptable if threads can accept the gauges without forcing.

3.4.5 Coupling. Connectors shall be coupled to counterpart connectors by means of a bayonet mechanism. The mechanism shall include a means of maintaining the mated connector in full engagement. The coupling ring shall be knurled or fluted to facilitate coupling and shall be captivated. Coupling pins shall be riveted, welded, or brazed in place. Coupling pin end surfaces shall be a contrasting color.

3.4.5.1 Ease of coupling. Counterpart connectors of any arrangement shall be capable of being fully coupled and uncoupled in a normal and accessible location without the use of tools.

3.4.5.2 Locking. A detent shall be provided in the coupling mechanism so that an audible click is evident when proper coupling is accomplished. Provision shall be made for visual determination that proper coupling has been achieved.

3.4.5.3 Polarization of connector shells. Polarization of connector shells shall be accomplished by means of five integral keys and suitable matching keyways on the counterpart. Polarization shall be accomplished before initial engagement of the coupling ring. During axial engagement, pins shall not touch sockets or the insert face until polarization has been achieved.

3.4.5.3.1 Alternates. Shells shall also be supplied with the main key (or keyway) rotated from the normal as specified on figure 7.

3.4.5.4 Lubrication. Bayonet coupling ramps and spring washers shall be coated with a suitable lubricant. Rear threads shall not be lubricated.

3.4.5.5 Pin-to-pin mating prevention (series I). Connectors shall be designed such that pin-to-pin contacts (electrical or physical) is not possible in the event that a plug with pin contacts is inadvertently mated to a receptacle with pin contacts.

3.4.6 Cavity fill. The cavity at the rear of connectors between the insert and the shell shall be filled with RTV silicone in accordance with MIL-A-46146 or equivalent.

3.4.7 Plating.

3.4.7.1 Contacts. Contacts shall be gold plated .00005 inch minimum in accordance with MIL-DTL-45204 over a suitable underplate. Silver underplate shall not be used. Dimensions apply after plating.

3.4.7.2 Shells. Unless otherwise specified, the finish on shells and accessory hardware shall be in accordance with the following designations:

a. Nickel plate a minimum of .0002 inch followed by cadmium plate .0001 inch minimum in accordance with SAE-AMS-QQ-P-416, type II. Dimensions apply after plating. A preliminary plate of other metal is permissible. The final finish shall be electrically conductive and shall be silver or light iridescent yellow in color.

b. Olive drab cadmium plate in accordance with SAE-AMS-QQ-P-416 over a suitable underplate to withstand 500-hour salt spray test. Final finish shall be electrically conductive.

c. Nickel fluorocarbon polymer, nickel with fluorocarbon polymer additives conforming to SAE-AMS2454 over a suitable underplate to withstand 500 hour salt spray. Final finish shall be nonreflective and shall be electrically conductive.

d. Zinc nickel alloy in accordance with ASTM B841, type D (black), over a suitable underplate to withstand 500 hour salt spray. Color shall be nonreflective. Final finish shall be electrically conductive.

3.4.7.2.1 Shell spring fingers. Shell spring fingers shall be suitably protected to prevent corrosion.

3.5 Interchangeability. All connectors having the same PIN shall be completely interchangeable with each other with respect to installation and performance.

3.6 Temperature cycling. When tested as specified in 4.6.2, there shall be no damage detrimental to the operation of the connector.

3.7 Coupling torque. When tested as specified in 4.6.4, the coupling torque for mating and unmating of counterpart connectors shall meet the requirements in table I.

3.8 Durability. When tested as specified in 4.6.5, the connectors shall show no defects detrimental to the operation of the connectors and shall meet the subsequent test requirements (see 4.4.3).

3.9 Insulation resistance. When tested as specified in 4.6.6, the insulation resistance between any pair of contacts and between any contact and the shell shall be greater than 10,000 megohms. Insulation resistance after humidity shall be 100 megohms minimum.

3.10 Dielectric withstanding voltage. When tested as specified in 4.6.7, connectors or contacts as applicable shall show no evidence of flashover or breakdown.

TABLE I. Coupling torque.

Shell size	Maximum engagement and disengagement	Minimum disengagement
	lb/inch	lb/inch
8	8	2
9	8	2
10	12	2
11	12	2
12	16	2
13	16	2
14	20	4
15	20	3
16	24	4
17	24	3
18	28	5
19	28	3
20	32	6
21	32	5
22	36	7
23	36	5
24	36	7
25	40	5

3.11 Insert retention. When tested as specified in 4.6.8, unmated connectors shall retain their inserts in their proper location in the shell and there shall be no evidence of cracking, breaking, separation from the shell, or loosening parts.

3.12 Air leakage (class T (all receptacles) and class P (MS20029 only)). When tested as specified in 4.6.3, there shall be no evidence of leakage in excess of one atmospheric cubic inch of air per hour (4.55 x 10^{-3} cm^3/s).

3.13 Contact resistance. When tested as specified in 4.6.10, contacts in the mated condition shall meet the contact resistance requirements of SAE-AS39029. Lead resistance may be included in the measurement.

3.14 Coupling pin strength. When tested as specified in 4.6.12, bayonet coupling pins shall withstand a load of 50 (+5/-0) pounds without displacement or perceptible loosening of coupling pins.

3.15 Vibration. When tested as specified in 4.6.13, there shall be no electrical discontinuity and there shall be no disengagement of the mated connectors, evidence of cracking, breaking, or loosening of parts.

3.16 Shock. When tested as specified in 4.6.14, there shall be no current discontinuity and there shall be no disengagement of the mated connectors, evidence of cracking, breaking, or loosening of parts.

3.17 Shell-to-shell conductivity. When tested as specified in 4.6.15, the probes shall not puncture or otherwise damage the connector finish and the maximum measured potential drop across assemblies shall be as follows:

a. Series I and II with spring fingers: 2.5 millivolts.
b. Series II without spring fingers: 200 millivolts.

3.18 Humidity. When tested as specified in 4.6.16, wired, potted, mated connectors shall show no deterioration which will adversely affect performance of the connector. Following the test, insulation resistance shall be 100 megohms or greater.

3.19 Shell spring finger forces. When tested as specified in 4.6.17, the forces necessary to engage and separate EMI plugs with receptacle shells shall be within the values specified in table II.

TABLE II. Shell spring finger forces.

Shell size	Axial force	
	Maximum (lbs)	Minimum (lbs)
8/9	25	.5
10/11	25	.5
12/13	30	.5
14/15	30	.5
16/17	35	.5
18/19	35	.5
20/21	35	.5
22/23	35	.5
24/25	35	.5

3.20 EMI shielding. When tested as specified in 4.6.18, the EMI shielding capabilities of mated shells with spring fingers shall not be less than that specified in table III at the specified frequencies.

TABLE III. EMI shielding effectiveness.

Frequency MHz	Leakage attenuation (dB minimum)	
	Series II	Series I
100	65	90
200	60	88
300	55	88
400	55	87
800	45	85
1,000	45	85

3.21 Salt spray (corrosion). When tested as specified in 4.6.9, unmated connectors shall show no lifting of plating or exposure of base material due to corrosion which will adversely affect performance, when evaluated in accordance with SAE-AIR4789.

3.22 Electrical engagement. When tested as specified in 4.6.11, wired and mated connectors shall provide a minimum of .034 inch electrical engagement.

3.23 Contact plating thickness. When tested as specified in 4.6.19, contacts shall be gold plated to a minimum thickness of .000050 inch over a suitable underplate. A silver underplate shall not be used. Dimensions apply after plating.

3.24 Contact engagement and separation force. When tested as specified in 4.6.20, contact engagement and separating forces shall be within the limits specified in SAE-AS39029.

3.25 Resistance to probe damage. When tested as specified in 4.6.21, contacts shall withstand the bending moment and depth of test probe insertion without evidence of damage that would interfere with the mechanical or electrical performance.

3.26 Contact location identification. Contact locations shall be identified as indicated on the applicable military standard. All positions shall be identified on the front and rear faces of the insert except where space limitations make this impractical. Location of contact identifying characters shall be in close proximity to the holes but need not be placed exactly where indicated on the standard.

3.27 Workmanship. The connector shall be fabricated in a manner such that the criteria for appearance, fit, and adherence to specified tolerances are observed. Particular attention shall be given to neatness and thoroughness of marking parts, plating, welding, soldering, riveting, staking, and bonding. The connectors shall be free from crazing, cracks, voids, pimples, chips, blisters, pinholes, sharp cutting edges, burrs and other defects that will adversely affect life, serviceability, or appearance.

3.28 Marking. Connectors and accessories shall be metal or ink stamped with the manufacturer's name or trademark, date code, and the following information, as applicable. Stamping shall be in accordance with MIL-STD-1285 where space permits. Metal stamping shall be accomplished before plating.

3.29 JAN and J marking. The United States Government has adopted and is exercising legitimate control over the certification marks "JAN" and "J", respectively, to indicate that items so marked or identified are manufactured to, and meet all the requirements of specifications. Accordingly, items acquired to, and meeting all of the criteria specified herein and in applicable specifications, shall bear the certification mark "JAN" except that items too small to bear the certification mark "JAN" shall bear the letter "J". The "JAN" or "J" shall be placed immediately before the part number except that if such location would place a hardship on the manufacturer in connection with such marking, the "JAN" or "J" may be located on the first line above or below the part number. Items furnished under contracts or orders which either permit or require deviation from the conditions or requirements specified herein or in applicable specifications shall not bear "JAN" or "J". In the event an item fails to meet the requirements of this specification and the applicable specification sheets or associated detail specifications, the manufacturer shall remove completely the military part number and the "JAN" or the "J" from the sample tested and also from all items represented by the sample. The "JAN" or "J" certification mark shall not be used on products acquired to contractor drawings or specification. The United States Government has obtained Certificate of Registration Number 504,860 for the certification mark "JAN" and Registration Number 2,577,735 for the certification mark "J".

Note: The "JAN" or "J" is not part of the PIN but indicates a certification.

3.30 Change effectivity. Unless otherwise specified by the preparing activity and/or the qualifying activity, all changes from the previous revision of MIL-DTL-27599 shall become effective within 90 days of the date of publication of the latest revision. If unable to implement changes within the 90 day time period, additional time shall be requested from the qualifying activity. Manufacturers that are QPL-listed and have concerns regarding possible changes to retention reporting requirements should contact the qualifying activity for clarification.

3.31 Disposition of stock. If connectors and accessories produced to the previous revision continue to meet the requirements of this specification, then products manufactured in accordance with the previous revision may continue to be shipped from stock for an indefinite period. If the qualified products meet the requirements of the previous revision, but do not meet the requirements of the current revision, then the manufacturer and their selling agents or distributors have a period of 18 months from the date of the latest revision to purge or ship all inventory, unless otherwise coordinated with, and authorized by, the qualifying activity.

3.32 Pure tin. The use of pure tin, as an underplate or final finish, is prohibited both internally and externally. Tin content of connectors, their components and solder shall not exceed 97 percent, by mass. Tin shall be alloyed with a minimum of 3 percent lead, by mass (see 6.9).

4. VERIFICATION

4.1 Classification of inspections. The inspection requirements specified herein are classified as follows:

a. Qualification inspection (see 4.4).
b. Conformance inspection (see 4.5).

4.2 Inspection conditions. Unless otherwise specified herein, all inspections shall be performed in accordance with the test conditions specified in the "GENERAL REQUIREMENTS" of EIA-364.

4.3 Test equipment and inspection facilities. Test and measuring equipment and inspection facilities of sufficient accuracy, quality, and quantity to permit performance of the required inspections shall be established and maintained by the contractor. The establishment and maintenance of a calibration system to control the accuracy of the measuring and test equipment shall be in accordance with ISO 17025, NCSL Z540.3, or equivalent system.

4.3.1 Reliability assurance program. A reliability assurance program shall be established and maintained in accordance with MIL-STD-790. Evidence of such compliance shall be verified by the qualifying activity of this specification as a prerequisite for qualification and continued qualification.

4.3.2 Hydrolytic stability. The connectors shall be subjected to the test as specified in ASTM D570 as applicable (see 3.3.1.2).

4.3.3 Fungus resistance certification. Certification to method 508 of MIL-STD-810 is required (see 3.3.3).

4.4 Qualification inspection. Qualification inspection shall be performed at a laboratory acceptable to the Government (see 6.3) on sample units produced with equipment and procedures normally used in production. Qualification approval may be granted upon successful completion of the inspections and tests of 4.4.3 conducted on samples of 4.4.1; such approval to include classes, finishes, shell configurations, and insert arrangements other than those actually tested provided that the capability to manufacture these parts is demonstrated by providing exhibit samples. Qualification of class T connectors also qualifies class P connectors.

4.4.1 Sample size. The following test samples, for each series, class, and finish, manufactured by normal production methods, shall be provided.

a. Two mating pairs of series II and four mating pairs of series I straight plugs and wall mounting receptacle of each of the nine shell sizes. Three shell sizes shall be service M, three shall be service I, and three shall be service II. Each arrangement in a given shell size shall be the densest contact arrangement for that particular service rating. Half the samples of each shell size shall have pin contacts in the receptacle and socket contacts in the plug. The other samples shall have socket contacts in the receptacle and pin contacts in the plug. All samples shall be provided with straight strain relief clamps.

b. One straight plug with spring fingers and counterpart wall mounting receptacle of small, medium, and large shell sizes with applicable EMI backshells.

c. One wall mounting receptacle with applicable conductive finish in small, medium, and large shell sizes, less coupling pins and inserts. These connectors must intermate with samples provided in 4.4 1.b.

d. One mating pair of series II and two mating pairs of series I will be supplied with the accessories for each shell size. One mating pair, each size, of series I connectors will be supplied with environmentally sealed strain relief adapters for sealing on jacketed cable. Connectors shall be supplied in maximum density contact arrangements with pin contacts in the receptacles.

4.4.1.1 Sample size (limited qualification). Manufacturers that do not intend to qualify all nine shell sizes in all series or all contact sizes shall provide the following test samples instead of those specified in 4.4.1a. Four mating pairs of each shell in each series or contact size to be qualified. The maximum number of connectors that will be tested is 36. Future qualification of additional shell or contact sizes will require qualification as determined by the qualifying activity.

4.4.2 Preparation of samples. The qualification samples provided under 4.4.1 shall be wired with wire conforming to SAE-AS22759.

4.4.3 Qualification tests.

a. Samples provided in 4.4.1a shall be divided as indicated. Each group shall contain approximately the same number of samples. One group shall be subjected to the tests of group I, table IV, in the sequence indicated. One group of series II and three groups of series I shall be subjected to the tests of group 2, table IV, in the sequence indicated.

b. Samples provided in 4.4.1b shall be subjected to the test of group 3, table IV, in the sequence indicated (except for receptacles for shell spring finger forces, see 4.4.1c and 4.4.3c).

c. Samples provided in 4.4.1c shall serve as counterparts for the tests of 4.6.17 in group 3, table IV.

d. Samples provided in 4.4.1d shall be subjected to the tests of group 4, table IV in the sequence indicated.

4.4.3.1 Failures. One or more failures shall be cause for refusal to grant qualification.

4.4.4 Retention of qualification. To retain qualification, the contractor shall forward a report every 24 months to the qualifying activity. The qualifying activity shall establish the reporting date. The report shall consist of:

a. A summary of the results of tests performed for group B inspection indicating as a minimum, the number of lots that have passed and the number that have failed. The results of tests of all reworked lots shall be identified and accounted for.

b. A summary of the results of tests performed for group C inspection including the number and mode of failures. The summary shall include results of all group B inspection tests performed and completed during the reporting period. If the summary of the test results indicates nonconformance with specification requirements, and corrective action acceptable to the qualifying activity has not been taken, action may be taken to remove the failing product from the qualified products list. Failure to submit the report within 30 days after the end of each reporting period may result in loss of qualification for the product. In addition to the periodic submission of inspection data, the contractor shall immediately notify the qualifying activity if at any time during the reporting period that the inspection data indicates failure of the qualified product to meet the requirements of this specification.

In the event that no production occurred during the 24 month reporting period, a report shall be submitted certifying that the company still has the capabilities and facilities necessary to produce the item. If during two consecutive reporting periods there has been no production, the manufacturer may be required, at the discretion of the qualifying activity, to submit the products (a representative product of each connector) to testing in accordance with the qualification inspection requirements.

TABLE IV. Qualification and group C periodic tests.

Inspection	Requirement paragraph	Test paragraph
Group 1 (all classes and finishes) Visual and mechanical inspection	1.1.1, 3.1, 3.3, 3.4, 3.5 and 3.27	4.6.1
Nonmagnetic materials	3.3.4	4.6.22
Temperature cycling	3.6	4.6.2
Air leakage	3.12	4.6.3
Coupling torque	3.7	4.6.4
Durability	3.8	4.6.5
Insert retention	3.11	4.6.8
Salt spray (corrosion)	3.21	4.6.9
Coupling torque	3.7	4.6.4
Contact resistance	3.13	4.6.10
Electrical engagement	3.22	4.6.11
Contact plating thickness	3.23	4.6.19
Contact engagement and separating force	3.24	4.6.20
Resistance to probe damage	3.25	4.6.21
Contact engagement and separating force	3.24	4.6.20
Contact resistance	3.13	4.6.10
Coupling pin strength	3.14	4.6.12
Visual and mechanical inspection	1.1.1, 3.1, 3.3, 3.4, 3.5 and 3.27	4.6.1
Group 2 (all classes) Visual and mechanical inspection	1.1.1, 3.1, 3.3, 3.4, 3.5 and 3.27	4.6.1
Temperature cycling	3.6	4.6.2
Coupling torque	3.7	4.6.4
Insulation resistance	3.9	4.6.6
Dielectric withstanding voltage (sea level)	3.10	4.6.7
Durability	3.8	4.6.5
Vibration 1/	3.15	4.6.13
Shock	3.16	4.6.14
Shell-to-shell conductivity	3.17	4.6.15
Humidity	3.18	4.6.16
Insulation resistance	3.9	4.6.6
Dielectric withstanding voltage (sea level)	3.10	4.6.7
Visual and mechanical inspection	1.1.1, 3.1, 3.3, 3.4, 3.5 and 3.27	4.6.1

See note at end of table.

TABLE IV. Qualification and group C periodic tests – Continued.

Inspection	Requirement paragraph	Test paragraph
Group 3 (shells with spring fingers) Visual and mechanical inspection	1.1.1, 3.1, 3.3, 3.4, 3.5 and 3.27	4.6.1
Durability (series I)	3.8	4.6.5
Shell spring finger forces	3.19	4.6.17
Shell-to-shell conductivity	3.17	4.6.15
EMI shielding	3.20	4.6.18
Visual and mechanical inspection	1.1.1, 3.1, 3.3, 3.4, 3.5 and 3.27	4.6.1
Group 4 (series I and II-finish B) Visual and mechanical inspection	1.1.1, 3.1, 3.3, 3.4, 3.5 and 3.27	4.6.1
Shock (high impact) (series I)	3.16	4.6.14
Dielectric withstanding voltage (sea level)	3.10	4.6.7
Salt spray (dynamic test)	3.21	4.6.9.2
Coupling torque	3.7	4.6.4
Coupling pin strength	3.14	4.6.12
Visual and mechanical inspection	1.1.1, 3.1, 3.3, 3.4, 3.5 and 3.27	4.6.1

1/ Qualification only.

4.5 Conformance inspection.

4.5.1 Group A inspection. Group A inspection shall consist of the visual and mechanical inspections specified in table V. The documentation requirements of EIA-364 do not apply.

TABLE V. Group A inspection.

Inspection	Requirement paragraph	Test paragraph
Visual inspection 1/	1.1.1, 3.1, 3.3, 3.4, 3.5 and 3.27	4.5.1.1
Critical inspection 1/ 2/	3.1	4.5.1.2
Insulation resistance 1/ 2/ 3/	3.9	4.6.6
Dielectric withstanding voltage 1/ 2/	3.10	4.6.7

1/ 100 percent inspection.
2/ The contractor may use in-process controls for this requirement.
3/ Test between two adjacent contacts and between two peripheral contacts and the shell.

4.5.1.1 Visual inspection (group A inspection). Each connector shall be visually examined for completeness, workmanship, and identification requirements. Attention shall be given to those assemblies that require a gasket to determine the condition of the gasket. Gaskets missing, twisted, buckled, kinked, or damaged in any way shall be cause for rejection. Each connector shall be visually inspected for the presence of compound between wire termination end of insert and shell.

4.5.1.2 Critical inspection (group A inspection). The following dimensions and features shown on the pertinent military standard are considered critical:

a. Mating diameters J and W on figures 1 and 2 (maximum on plugs, minimum on receptacles).
b. Key or keyway positions.
c. Contact pattern relative to datum features.
d. Registration of insert markings. (Hole pattern between the rear and the front face of the insert.)

4.5.2 Group B inspection. Group B inspection shall consist of the inspections specified in table VI in the order shown and shall be made on sample units which have been subjected to and have passed the group A inspection. For group B inspection, the documentation and standard test conditions of EIA-364 do not apply.

TABLE VI. Group B inspection.

Inspection	Requirement paragraph	Test paragraph
Visual and mechanical inspection 1/	1.1.1, 3.1, 3.3, 3.4, 3.5 and 3.27	4.6.1
Contact resistance 2/	3.13	4.6.10
Contact engagement and separating force 1/	3.24	4.6.20
Shell spring finger forces (plugs with spring fingers only) 1/ 3/	3.19	4.6.17

1/ The contractor may use in-process controls for this requirement.
2/ Test three contacts in each sample connector.
3/ Test five pieces. No failures permitted.

4.5.2.1 Sampling plan (group B inspection). A sample size shall be randomly selected in table VII. If one or more defects are found the lot shall be rescreened and defects removed. A new sample in accordance with table VII shall then be randomly selected. If one or more defects are found in the second sample, the lot shall be rejected and shall not be supplied to this specification.

TABLE VII. Sampling plan.

Lot size	Sample size
1 to 13	100 percent
14 to 150	13 units
151 to 280	20 units
281 to 500	29 units
501 to 1,200	34 units
1,201 to 3,200	42 units

4.5.2.2 Lot definition (group B inspection). The production lot definition in accordance with MIL-STD-790 is further defined as follows:

A production lot consists of all connectors covered under one military specification or standard, manufactured from the specified raw materials, processed under the same specification and procedures, produced by the same type of equipment, and submitted for inspection at one time.

Each production lot of assembled connectors shall be a group identified by a common manufacturing record through all significant assembly operations.

Common manufacturing records and traceability shall begin with machining and molding and shall include connector assembly. Traceability of connectors to specific physical/chemical test reports of incoming raw material is not required.

4.5.2.3 Disposition of sample units. Sample units which have passed all of group B inspection may be delivered on the contract or purchase order if the lot is accepted and the sample units are still within specified tolerances.

4.5.3 Periodic inspection. Periodic inspection shall consist of group C inspection. Except where the results of this inspection show noncompliance with the applicable requirements (see 4.5.3.1.5), delivery of products which have passed groups A and B inspections shall not be delayed pending the results of this periodic inspection.

4.5.3.1 Group C inspection (periodic tests). Periodic tests shall be performed on a 24-month basis. Samples submitted for periodic testing shall have passed groups A and B inspections.

4.5.3.1.1 Twenty-four month periodic test. The following tests shall be performed:

a. Humidity: Two mating connector pairs in the –35 arrangement of the largest shell size in regular production during that period shall be subjected to humidity testing in accordance with 4.6.16.

b. Salt spray, corrosion: On one plug shell, receptacle shell, and coupling nut of any small and large size of each series, conduct the salt spray test of 4.6.9.2. This requirement is applicable to series I and II, finish B.

c. Two mating plugs and receptacles in each series shall be provided. These samples shall include at least three shell sizes, small (sizes 8 through 13), medium (sizes 14 through 19), and large (sizes 20 through 25) manufactured during the period, and all three service ratings. One mating sample of each configuration shall be fully wired with the applicable wire as specified in 4.4.2 herein and subjected to the applicable tests in table IV, group 1. The remaining samples shall be fully wired with the applicable wire as specified in 4.4.2 herein and subjected to the applicable tests in table IV, group 2.

4.5.3.1.3 Failures. If one or more sample units fail to pass group C inspection, the sample shall be considered to have failed and corrective action shall be taken in accordance with 4.5.3.1.5.

4.5.3.1.4 Disposition of sample units. Sample units which have been subjected to group C inspection shall not be delivered on the contract or purchase order.

4.5.3.1.5 Noncompliance. If a sample fails to pass group C inspection, the manufacturer shall notify the qualifying activity and the cognizant inspection activity of such failure and take corrective action on the materials or processes, or both, as warranted, and on all units of product which can be corrected and which were manufactured with essentially the same materials and processes, and which are considered subject to the same failure. Acceptance and shipment to the product shall be discontinued until corrective action, acceptable to the qualifying activity has been taken. After the corrective action has been taken, group C inspection shall be repeated on additional sample units (all tests and examinations, or the test which the original sample failed, at the option of the qualifying activity). Groups A and B inspections may be reinstituted; however, final acceptance and shipment shall be withheld until the group C inspection has shown that the corrective action was successful. In the event of a failure after reinspection, information concerning the failure shall be furnished to the cognizant inspection activity and the qualifying activity.

4.5.4 Failures of groups A, B, or C. Lots which fail groups A, B, or C and which are not resubmitted for retesting, or which fail retesting, shall not be shipped, and the PIN and "JAN" marking shall be removed within 30 days from product produced to these lots.

4.6 Methods of inspection.

4.6.1 Visual and mechanical inspection.

4.6.1.1 Connectors. The connectors, accessories, and piece parts shall be visually and mechanically examined to ensure conformance with the specification and the applicable military standards (see 1.1.1, 3.1, 3.3, 3.4, 3.5 and 3.27). The contractor may use in-process controls to satisfy these requirements.

4.6.1.2 Contacts. The contacts shall be visually examined for mechanical defects (see 1.1.1, 3.1, 3.3, 3.4, and 3.27). The contacts shall be inspected through a device having a magnification power of approximately 3 diameters. The contractor may use in-process controls to satisfy these requirements.

4.6.2 Temperature cycling (see 3.6). Mated connectors shall be subjected to the temperature cycling test procedure EIA-364-32, test condition I except that steps 2 and 4 shall be of 2 minutes maximum duration. The temperature of step 1 shall be -65°C +0, -5°C and the temperature of step 3 shall be 150°C for finish A of series I and II, 175°C for finish B of series I and II.

4.6.3 Air leakage (see 3.12). The connector shall be subjected to test procedure EIA-364-02. Pressure differential across the connector shall be 1 atmosphere.

4.6.4 Coupling torque (see 3.7). For qualification testing, mating halves shall be coupled and uncoupled; the forces or torques which must be applied to facilitate full coupling and uncoupling shall be measured and recorded. For quality conformance, suitable gauges may be used instead of the appropriate counterparts.

4.6.5 Durability (see 3.8). The wired, assembled plugs and receptacles shall be mated and unmated 250 cycles at a rate of 200 cycles per hour maximum. The mating and unmating shall be accomplished so that the plug and receptacle are completely separated during each cycle.

4.6.6 Insulation resistance (see 3.9). Unmated connectors shall be tested as specified in test procedure EIA/ECA-364-21. The following details and exceptions apply:

a. The tolerance on the applied voltage shall be ± 10 percent.
b. Connectors shall be mated when testing after humidity.

4.6.7 Dielectric withstanding voltage (see 3.10). Wired, unmated connectors shall be tested in accordance with test procedure EIA-364-20. The following details and exceptions apply:

a. The magnitude of the test voltage shall be as specified in table VIII.
b. The test voltage shall be maintained at the specified value for 2 seconds minimum.
c. The test voltage shall be applied between any pair of contacts and between any contact and the shell.

TABLE VIII. Test voltages, Vac, RMS, 60 Hz.

Altitude	Service rating M		Service rating I		Service rating II	
	Mated	Unmated	Mated	Unmated	Mated	Unmated
Sea level	1300	1300	1800	1800	2300	2300

4.6.8 Insert retention (see 3.11). Unmated connectors shall be tested in accordance with test procedure EIA-364-35 with the following details and exceptions:

a. Force to be applied: 100 ± 5 pounds per square inch with a 25 pound minimum force.
b. Connectors may be wired.

4.6.9 Salt spray (corrosion) (see 3.21).

4.6.9.1 Salt spray (corrosion) standard test (series I and II, finish A). Unmated connectors shall be tested in accordance with test procedure EIA/ECA-364-26. The following details and exceptions shall apply:

a. Test condition letter: B.
b. The samples shall not be mounted but shall be suspended from the top of the chamber using waxed twine or string, glass rods, or glass cord.
c. Wire ends must be protected to prevent salt migration.

4.6.9.2 Salt spray (corrosion) dynamic test (series I and II, finish B). The wired, assembled plugs and receptacles shall be mated and unmated 50 cycles at a rate of 300 cycles per hour maximum. The mating and unmating shall be accomplished so that the plug and receptacle are completely separated during each cycle. The connectors shall then be subjected to the salt spray test in accordance with test procedure EIA/ECA-364-26. The following details and exceptions apply:

a. The connectors shall be tested for 452 hours mated followed by 48 hours unmated.
b. The connectors shall not be mounted but shall be suspended from the top of the chamber using waxed twine or string, glass rods, or glass cord.
c. Wire ends must be protected to prevent salt migration.

After the salt spray exposure, the remaining number of durability cycles specified in 4.6.5 shall be completed.

4.6.10 Contact resistance (see 3.13). Contacts or mated connectors shall be tested in accordance test procedure EIA-364-06.

4.6.11 Electrical engagement (see 3.22). Counterpart plugs and receptacles shall be wired so as to provide a complete series circuit through all contacts of the mated connector. A suitable power source and indicator shall be provided such that the earliest point at which the circuit is completed, during normal connector mating, can be established. Connector halves shall be slowly mated by the normal mating means until first indication of a completed circuit is observed. Means shall be provided to assure that electrical contact is made between the pin and the spring of the socket contact, rather than the hood of the socket contact. The mating operation shall be held at this point and the overall connector length shall be measured from solid reference points on the connector halves. The mating operation shall then be continued until the connector halves are in the completely mated position. A second overall length measurement shall then be taken from the same reference points. The difference of these two measurements shall be not less than specified in 3.22. Both the outer shield and inner conductor circuits shall be included in the test of shielded contacts.

4.6.12 Coupling pin strength (see 3.14). One coupling pin in each receptacle shall be subjected to 50 +5 / -0 pounds load applied to the swaged end along the major axis of the coupling on swaged pins, and perpendicular to the pin centerline on the exposed portion of welded or brazed pins. A steel test tip shall be used for application of the load on swaged pins. A steel test fixture contoured to the shape of the coupling pin shall be used for application of the load on the welded or brazed pins.

4.6.13 Vibration (see 3.15). Wired, potted, and mated connectors shall be subjected to the vibration test procedure EIA-364-28, condition III except that the duration shall be one hour in each plane. Receptacles shall be mounted on the vibration fixture by normal means. All contacts shall be wired in a series circuit, and 100-150 milliamperes of current shall be allowed to flow through the series circuit during vibration. Suitable means shall be employed to monitor the current flow and to indicate any discontinuity of more than 1 microsecond. The wire bundle shall be clamped to non-vibrating points at least 8 inches from the rear of the connector.

4.6.14 Shock (see 3.16). Wired, potted, and mated connectors shall be subjected to an approximate half sine wave pulse of 300 g $\pm$ 15 percent with a duration of 3 $\pm$ 1 milliseconds, once in each direction in each of three mutually perpendicular axes (total of six shocks). Receptacles shall be mounted on a shock fixture by normal means. All contacts shall be wired in a series circuit and 100-150 mA of current shall be allowed to flow through the series circuit during shock. Suitable means shall be employed to monitor the current flow and to indicate any discontinuity of more than 1 microsecond. The wire bundle shall be clamped to fixed points at least 8 inches from the rear of the mated connectors. Current discontinuity of 1 microsecond or more, disengagement of mated connectors, or evidence of cracking, breaking, or loosening of parts shall be cause for rejection.

4.6.15 Shell-to-shell conductivity (see 3.17). Mated connectors shall be subjected to the test specified in test procedure EIA/ECA-364-83.

4.6.16 Humidity (see 3.18). Wired, mated connectors shall be subjected to the humidity test specified in test procedure EIA-364-31. The following details and exceptions shall apply:

a. The mated connectors shall be mounted in a vertical position.

b. Step 7 (a) shall be performed during the last cycle.

c. Three hours minimum after the start of step 7 (a) during the final cycle and while the connectors are still subjected to high humidity, the insulation resistance shall be measured when the chamber temperature reaches 20°C $\pm$ 5°C and condensation is observed on the connector.

d. For qualification testing, insulation resistance readings shall be made on a minimum of 50 percent of the circuits. Outer circuits shall be measured to the connector shell.

4.6.17 Shell spring finger forces (see 3.19). Plugs shall be completely mated and unmated 10 times with counterpart receptacles less coupling pins (if applicable) and inserts. On the mating of the first cycle, the forces necessary to engage the connectors shall be within the values specified in table II. On the unmating of the last cycle, the forces necessary to separate the connectors shall be within the value specified in table II.

4.6.18 EMI shielding (see 3.20).

4.6.18.1 EMI shielding (from 100 to 1,000 MHz only). The EMI shielding effectiveness of mated connectors with EMI backshells shall be measured in a triaxial radio frequency leakage fixture as shown on figure 8. The EMI leakage from the conductor inside the connector in the same inner coaxial line into the outer coaxial line shall be measured at the frequencies specified in table III within a frequency accuracy of ± 5 percent. The level of detected signal power shall be indicated by a tunable radio frequency field intensity meter isolated from the test circuit by a 3 to 10 dB pad. Care shall be taken to ensure that the signal is a result of EMI leakage from within the mated connector and not due to a faulty termination inside the fixture. All terminations inside the fixture, whether to the EMI backshells or between internal conductors, shall have a leakage at least 10 dB less than the test requirements. The signal source shall be set to the desired frequency. The signal shall be fed through a 3 to 10 dB isolation pad to a parallel circuit consisting of a coaxial switch (DPDT) so connected that the signal can be manually or electronically fed alternately to the fixture and to a variable 100 dB reference attenuator. The attenuator shall be adjustable in 1 dB steps and calibrated to ± 3 dB.

a. The inserts may be removed from the connectors under test to accommodate a center conductor of suitable geometry to provide a good 50-ohm impedance match with the inside diameter of the mated connector shells and EMI backshells. Tapered transition may be used to provide a means of changing diameters without introducing significant discontinuities in the line. The maximum VSWR in the inner coaxial line shall be 1.5. The outer shell of the test fixture shall be so constructed as to provide a good 50-ohm impedance match with the outside diameter of the mated connector shells, coupling ring, and EMI backshells. The maximum VSWR of the outer coaxial line shall be 1.5.

b. A sliding circumferential short shall be positioned behind the connector on the signal input end of the fixture to provide for turning the outer coaxial line for maximum output at each test frequency. The allowable travel of this short shall be greater than ½ wave length at the lowest test frequency of 1.5 meters minimum for 100 MHz. The inner coaxial line shall be terminated in a fixed 50-ohm load impedance behind the connector at the output end of the fixture.

c. The connectors used to couple together the various elements of the test system shall be of a low-leakage type which have a nominal impedance of 50 ohms, a VSWR of less than 1.5, and a minimum leakage attenuation of 100 dB. The output impedance of the signal source and the input impedance of the detector shall be nominally 50 ohms with a maximum VSWR of 1.5. The input and output VSWR of the standard attenuator shall be less than 1.5 in the 20 to 100 dB range.

d. The relative signal level in the variable attenuator shall be equaled to the signal level through the leakage fixture by adjusting the attenuator. The signal loss in the fixture can then be read from the setting on the variable attenuator.

4.6.19 Contact plating thickness (see 3.23). Contact plating thickness shall be measured in accordance with MIL-DTL-45204.

4.6.20 Contact engagement and separating force (see 3.24). Connectors shall be mounted in a suitable fixture for applying gradually increasing loads for the engagement and separation of the specified SAE-AS31971 test pins and in accordance with test procedure EIA-364-37. The test pins shall be inserted a minimum of .7L (see SAE-AS39029). A maximum diameter test pin shall be inserted and removed from each socket contact. The engagement force shall be measured during insertion. A minimum diameter test pin shall be inserted and removed from each socket contact and the separation force shall be measured during removal.

4.6.21 Resistance to probe damage (see 3.25). Contact shall be tested for probe damage in accordance with test procedure EIA/ECA-364-25, type 2. The following details and exceptions shall apply:

a. The diameter of the handle (.190) does not apply.
b. Probe depth, dimension "B" shall be ½ and ¾ of the specified minimum socket bore depth or as specified (see 3.1).

4.6.22 Nonmagnetic materials (see 3.3.4). Connectors shall be tested as specified in test procedure EIA-364-54.

5. PACKAGING

5.1 Packaging. For acquisition purposes, the packaging requirements shall be as specified in the contract or order (see 6.2). When packaging of materiel is to be performed by DoD or in-house contractor personnel, these personnel need to contact the responsible packaging activity to ascertain packaging requirements. Packaging requirements are maintained by the Inventory Control Point's packaging activities within the Military Service or Defense Agency, or within the military service's system commands. Packaging data retrieval is available from the managing Military Department's or Defense Agency's automated packaging files, CD-ROM products, or by contacting the responsible packaging activity.

6. NOTES

(This section contains information of a general or explanatory nature that may be helpful, but is not mandatory.)

6.1 Intended use. The various configurations of the connectors are intended for use as follows:

a. Series I connectors: General application within weapon systems where a quick disconnect coupling system is required for blind mating or other mating problem areas.

   Class T, general duty, no provisions are made for sealing around wires on rear end.

   Class P, intended for use in applications where sealing around wires is accomplished by potting.

b. Series II connectors: General application within weapon systems which are not subjected to high vibration or SWAMP areas. These connectors are not scoop-proof (see 6.1.1); connectors are lightweight.

c. Series I and II are intermateable with series I and II respectively of MIL-DTL-38999.

6.1.1 Application guidance. Users of connectors, covered by this specification, in new design systems and support equipment are advised to evaluate carefully for each application the relative merits of the long shell series I and short shell series II connectors. When considering use of the short shell series II connectors, the following areas must be evaluated:

a. Series II connectors are vulnerable to pin contact bending from scooping, with contact size 22 being the most vulnerable.

b. Use of series II connectors should be avoided in areas of blind mating.

c. Receptacles should be located so as to minimize the amount of required cable bending. When using series II connectors with large cables which must be bent at right angles, the cables must have the right angle bend permanently established.

d. Series II connector should not be used with heavy jacketed cable and excessive overhang moments, because of possible shell damage.

e. Series II connectors should not be used in areas of rough handling such as experienced near engine removal, generators, support equipment, or portable equipment, etc.

f. When mating series II connectors in areas of difficult visibility, care must be exercised to make sure that all bayonet pins are engaged by the coupling ring, since it is possible to engage only one bayonet pin and therefore only partially couple.

g. When mating series II connectors in areas of difficult visibility, care must be exercised to make sure that connector plugs with pins are not coupled to receptacles with pins. This situation will result in the contacts touching.

h. Recommended connector potting boot for class P: Use SAE-AS85049/61.

6.2 Acquisition requirements. Acquisition documents should specify the following:

a. Title, number, and date of this specification.
b. Nomenclature by class, type, finish, style, size, and PIN (see 1.1.1 and 1.3.1).
c. Packaging requirements (see 5.1).

6.3 Qualification. With respect to products requiring qualification, awards will be made only for products which are, at the time of award of contract, qualified for inclusion in Qualified Product List QPL No.27599 whether or not such products have actually been so listed by that date. The attention of the contractors is called to these requirements, and manufacturers are urged to arrange to have the products that they propose to offer to the Federal Government tested for qualification in order that they may be eligible to be awarded contracts or orders for the products covered by this specification. Information pertaining to qualification of products may be obtained from the Defense Supply Center Columbus, ATTN: DLA Land and Maritime-VQ, 3990 East Broad Street, Columbus, Ohio 43218-3990. An online listing of products qualified to this specification may be found in the Qualified Products Database (QPD) at https://assist.dla.mil.

6.3.1 Copies of SD-6, "Provisions Governing Qualification". Copies of "Provisions Governing Qualification" may be https://assist.dla.mil.

6.4 Definitions.

6.4.1 Scoop-proof. Scoop-proof means that because of the connector long shell design, it is impossible for the mating plug connector to inadvertently be cocked into the mating receptacle and damage the pins or electrically short the contacts.

6.5 Subject term (key word) listing.

Bayonet coupling
Circuit closure
Fixed pin
Intermateable
Series I
Series II
Termination

6.6 Guidance on use of alternative parts with less hazardous or nonhazardous materials. This specification provides for a number of alternative plating materials via the PIN. Users should select the PIN with the least hazardous material that meets the form, fit and function requirements of their application.

6.7 Military unique statement. This connector is military unique because it is an environment resisting, high density, quick disconnect circular connector, supplied under a MIL-STD-790 reliability assurance program. These connectors are also intermateable with series I and II of MIL-DTL-38999 connectors.

6.8 Tin whisker growth. The use of alloys with tin content greater than 97 percent, by mass, may exhibit tin whisker growth problems after manufacture. Tin whiskers may occur anytime from a day to years after manufacture and can develop under typical operating conditions, on products that use such materials. Conformal coatings applied over top of a whisker-prone surface will not prevent the formation of tin whiskers. Alloys of 3 percent lead, by mass, have shown to inhibit the growth of tin whiskers. For additional information on this matter, refer to ASTM B545 (Standard Specification for Electrodeposited Coatings of Tin) (see 3.32).

6.9 Changes from previous issue. The margins of this specification are marked with vertical lines to indicate where changes from the previous issue were made. This was done as a convenience only and the Government assumes no liability whatsoever for any inaccuracies in these notations. Bidders and contractors are cautioned to evaluate the requirements of this document based on the entire content irrespective of the marginal notations and relationship to the previous issue.

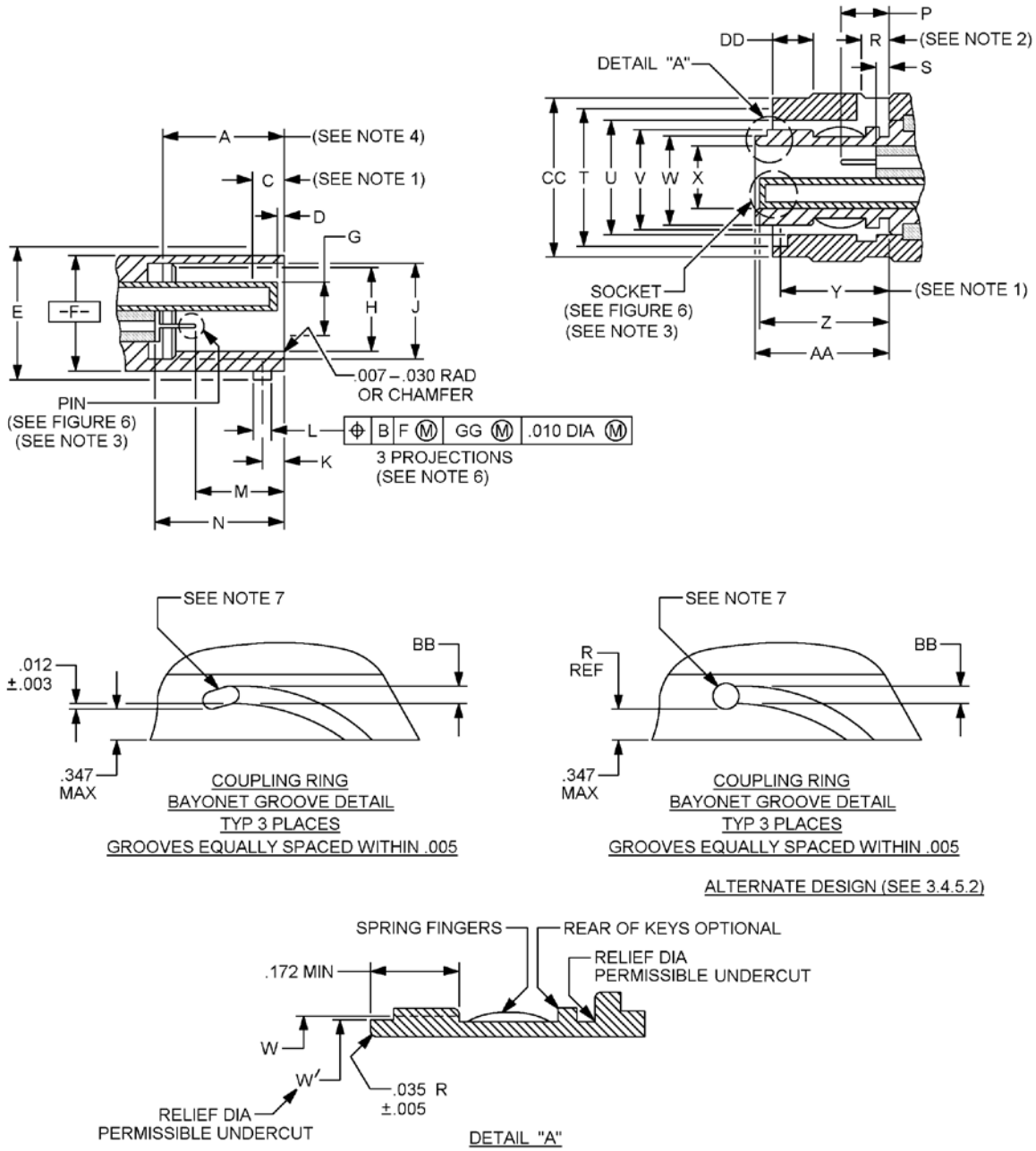

FIGURE 1. Connector intermateability dimensions, series I.

Shell size	A gasket location	C max (see note 1)	D socket inside location	E dia +.000 -.016	F dia +.001 -.005	G dia +.005	H dia +.005 -.001
9	.569 .553	.116	.025 .015	.662	.572	.285	.442
11				.810	.700	.413	.570
13				.960	.850	.527	.687
15				1.085	.975	.652	.812
17				1.210	1.100	.777	.937
19				1.317	1.207	.866	1.042
21				1.442	1.332	.991	1.167
23				1.567	1.457	1.116	1.292
25				1.692	1.582	1.241	1.417

Shell size	J dia +.005 -.006	K bay pin location	L dia +.006 -.002	M pin contact location	N pin inside location	P pin contact location
9	.492	.100	.078	.395 .379	.581 .571	.215 .194
11	.620					
13	.769					
15	.894					
17	1.019					
19	1.124					
21	1.249					
23	1.374					
25	1.499	.109	.125			

FIGURE 1. Connector intermateability dimensions, series I – Continued.

Shell size	R (see note 2)	S pin inside location	T dia +.005 -.006	U dia +.005 -.001	V dia +.001 -.010	W dia +.001 -.005	W min
9	.133 .093	.023 .013	.674	.580	.482	.437	.417
11			.822	.712	.610	.565	.545
13			.972	.861	.759	.677	.657
15			1.097	.985	.884	.802	.782
17			1.222	1.110	1.009	.927	.907
19			1.329	1.217	1.114	1.032	1.012
21			1.454	1.342	1.239	1.157	1.137
23			1.579	1.467	1.364	1.282	1.262
25	.172 .132		1.704	1.592	1.489	1.407	1.387

Shell size	X dia +.003	Y min (see note 1)	Z socket inside location	AA shoulder location	BB +.016 -.001	CC dia +.011 -.000	DD +.045 -.036
9	.315	.478	.579 .569	.597 .592	.090	.780	.164
11	.433					.905	
13	.547					1.061	
15	.672					1.186	
17	.797					1.301	
19	.886					1.422	
21	1.011					1.544	
23	1.136					1.667	
25	1.260				.137	1.793	

FIGURE 1. Connector intermateability dimensions, series I – Continued.

Inches	mm	Inches	mm	Inches	mm	Inches	mm	Inches	mm	Inches	mm
.001	0.03	.154	4.17	.572	14.53	.810	20.57	1.061	26.95	1.301	33.05
.002	0.05	.172	4.37	.579	14.71	.812	20.62	1.085	27.56	1.317	33.45
.003	0.08	.194	4.93	.580	14.73	.822	22.88	1.097	27.86	1.329	33.76
.005	0.13	.215	5.46	.581	14.76	.850	21.59	1.100	27.94	1.332	38.83
.006	0.15	.285	7.24	.592	15.04	.861	21.87	1.110	28.19	1.342	34.09
.010	0.25	.315	8.00	.597	15.16	.866	22.00	1.114	28.30	1.364	34.65
.011	0.28	.379	9.63	.610	15.49	.884	22.45	1.116	28.35	1.374	34.90
.013	0.33	.395	10.03	.620	15.75	.886	22.50	1.124	28.55	1.387	35.23
.015	0.38	.413	10.49	.652	16.56	.894	22.71	1.136	28.85	1.407	35.74
.016	0.41	.417	10.59	.657	16.69	.905	22.99	1.137	28.88	1.417	35.99
.023	0.58	.433	11.00	.662	16.81	.907	23.04	1.157	29.39	1.422	36.12
.025	0.64	.437	11.10	.672	17.07	.927	23.55	1.167	29.64	1.442	36.63
.036	0.91	.442	11.23	.674	17.12	.937	23.80	1.186	30.12	1.454	36.93
.045	1.14	.478	12.14	.677	17.20	.960	24.38	1.207	30.66	1.457	37.01
.078	1.98	.482	12.24	.687	17.45	.972	24.69	1.210	30.73	1.467	37.26
.090	2.29	.492	12.50	.700	17.78	.975	24.76	1.217	30.91	1.489	37.82
.093	2.36	.527	13.39	.712	18.08	.985	25.02	1.222	31.04	1.499	38.07
.100	2.54	.545	13.84	.759	19.28	.991	25.17	1.239	31.47	1.544	39.22
.109	2.77	.547	13.89	.769	19.53	1.009	25.63	1.241	31.51	1.567	39.80
.116	2.95	.553	14.05	.777	19.74	1.011	25.68	1.249	31.72	1.579	40.11
.125	3.18	.565	14.35	.780	19.81	1.012	25.70	1.260	32.00	1.582	40.18
.132	3.35	.569	14.45	.782	19.86	1.019	25.88	1.262	32.05	1.592	40.44
.133	3.38	.570	14.48	.797	20.24	1.032	26.21	1.282	32.56	1.667	42.34
.137	3.48	.571	14.50	.802	20.37	1.042	26.47	1.292	32.82	1.692	42.98
										1.704	43.28
										1.793	45.54

FIGURE 1. Connector intermateability dimensions, series I – Continued.

NOTES:

1. A point at which gauge pin, having the same basic diameter as the mating contact and a square face, touches socket contact spring.
2. Distance from plug shell shoulder to locking point of coupling ring.
3. Figure 6 applies to both plugs and receptacles.
4. “A” initial contact with static seal.
5. The least amount of electrical engagement occurs when the insert faces are at their minimum interference location. When this condition exists, the coupling spring force shall be sufficient to guarantee .024 (0.61 mm) inch compression of the peripheral sealing gasket. Minimum electrical contact engagement is therefore computed with the peripheral sealing gasket compressed .024 (0.61 mm) inch from its MMC position.
6. The gauge features for GG (see main key/keyway polarization detail on figure 7) shall be .010 (0.25 mm) smaller than their MMC at basic location. (See applicable MS standards.)
7. Three holes (design optional) equally spaced within .010 (0.25 mm) shall be provided for visual inspection of lock when mated with receptacle.
8. Insert front surface shall be flat within .005 (0.13 mm) TIR.
9. Diameters F and H shall be concentric within .015 (0.38 mm) TIR.
10. Diameter F with respect to diameter E and diameter H with respect to diameter J shall be concentric at MMC.
11. Diameters H and G shall be concentric within .005 (0.13 mm) TIR at MMC.
12. Diameter W with respect to diameter V shall be concentric at MMC.
13. Diameters U and T shall concentric within .008 (0.20 mm) TIR.
14. Diameters CC to be concentric to diameter U within .005 (0.13 mm) TIR.
15. Dimensions are in inches.
16. Metric equivalents are given for information only.

FIGURE 1. Connector intermateability dimensions, series I – Continued.

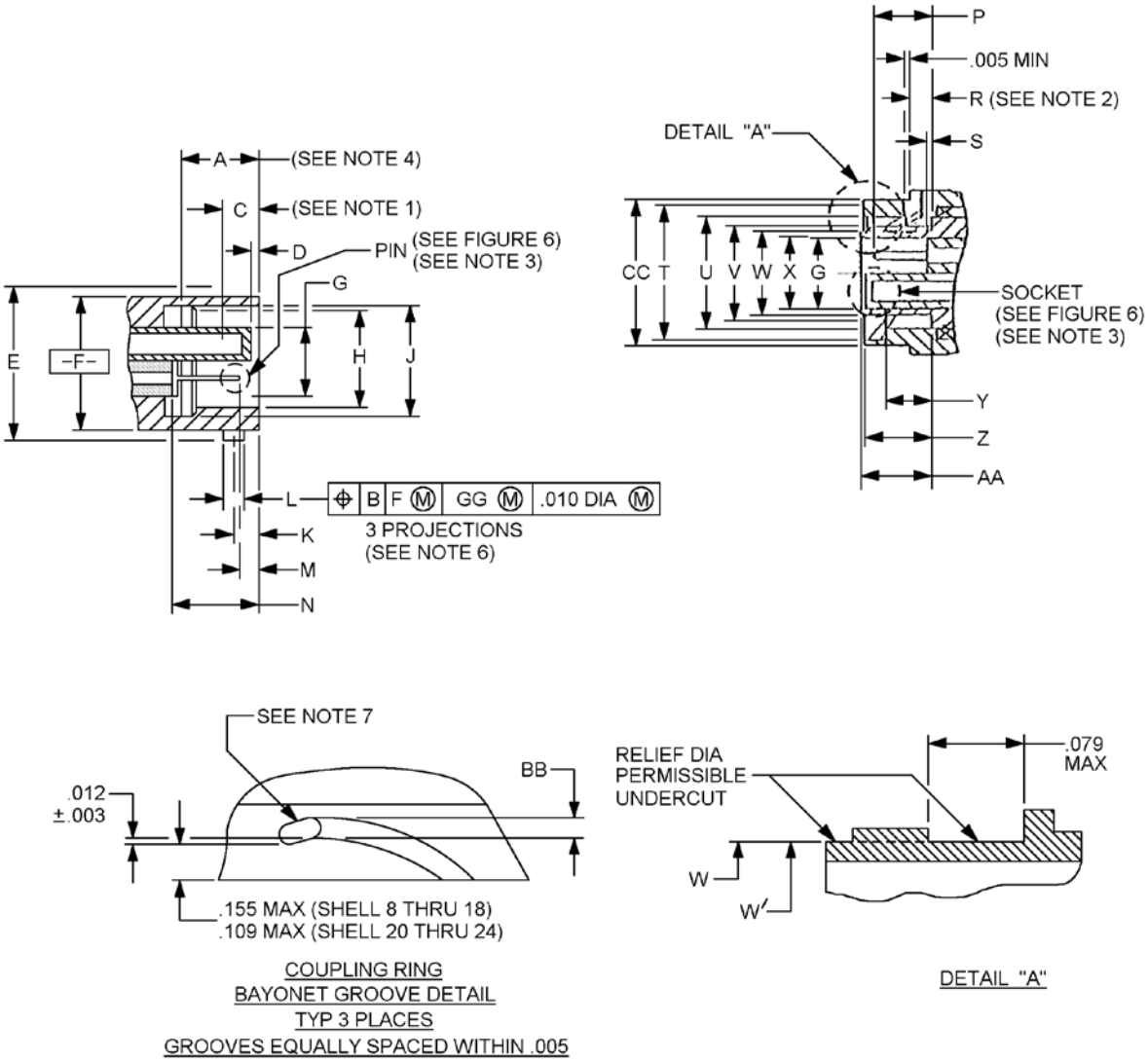

FIGURE 2. Connector intermateability dimensions, series II.

Shell size	A gasket location	C (see note 1)	D socket inside location	E dia +.000 -.016	F dia +.001 -.005	G dia +.005	H dia +.005 -.001
8	.232 .216	.116 max	.025 .015	.563	.473	.285	.362
10				.680	.590	.413	.490
12				.859	.750	.527	.607
14				.984	.875	.652	.732
16				1.108	1.000	.777	.857
18				1.233	1.125	.866	.962
20				1.358	1.250	.991	1.087
22				1.483	1.375	1.116	1.212
24				1.610	1.500	1.241	1.337

Shell size	J dia +.005 -.006	K bay pin location	L dia +.006 -.002	M pin contact location	N pin inside location	P pin contact location
8	.412	.078	.078	.058 .042	.244 .234	.215 .194
10	.540					
12	.689					
14	.814					
16	.939					
18	1.039					
20	1.164		.125			
22	1.289					
24	1.414					

FIGURE 2. Connector intermateability dimensions, series II – Continued.

Shell size	R (see note 2)	S pin inside location	T dia +.005 -.006	U dia +.005 -.001	V dia +.001 -.010	W dia +.001 -.005	W min
8	.116 .076	.023 .013	.576	.481	.402	.357	.337
10			.697	.602	.530	.485	.465
12			.871	.761	.679	.597	.557
14			.995	.885	.804	.722	.702
16			1.120	1.010	.929	.847	.827
18			1.245	1.136	1.029	.947	.927
20	.143 .103		1.370	1.260	1.154	1.072	1.052
22			1.495	1.385	1.279	1.197	1.117
24			1.624	1.510	1.404	1.322	1.302

Shell size	X dia +.003	Y (see note 1)	Z socket inside location	AA shoulder location	BB +.016 -.001	CC dia +.011 -.000
8	.306	.141 min	.242 .232	.260 .256	.090	.630
10	.423					.752
12	.537					.925
14	.662					1.050
16	.787					1.172
18	.876					1.304
20	1.001				.137	1.435
22	1.126					1.560
24	1.251					1.688

FIGURE 2. Connector intermateability dimensions, series II – Continued.

Inches	mm	Inches	mm	Inches	mm	Inches	mm	Inches	mm	Inches	mm
.001	0.03	.242	6.15	.563	14.15	.827	21.01	1.050	26.67	1.289	32.74
.002	0.05	.244	6.20	.576	14.30	.847	21.51	1.052	26.72	1.302	33.07
.005	0.13	.256	6.50	.590	14.63	.857	21.77	1.072	27.23	1.304	33.12
.006	0.15	.260	6.60	.597	14.99	.859	21.82	1.087	27.61	1.322	33.58
.013	0.33	.285	7.24	.602	15.16	.866	22.00	1.108	28.14	1.337	33.95
.015	0.38	.306	7.77	.607	15.29	.871	22.12	1.116	28.35	1.358	34.49
.016	0.41	.337	8.59	.630	15.42	.875	22.22	1.117	28.38	1.370	34.80
.023	0.58	.357	9.07	.652	16.00	.876	22.25	1.120	28.45	1.375	34.92
.025	0.64	.362	9.19	.662	16.56	.885	22.48	1.125	28.58	1.385	35.18
.042	1.07	.402	10.21	.679	16.81	.925	23.50	1.126	28.60	1.404	35.66
.058	1.47	.412	10.46	.680	17.27	.927	23.55	1.136	28.85	1.414	35.92
.076	1.93	.413	10.49	.689	17.50	.929	23.60	1.154	29.31	1.435	36.45
.078	1.98	.423	10.74	.697	17.70	.939	23.85	1.164	29.57	1.483	37.67
.090	2.29	.465	11.81	.702	17.83	.947	24.05	1.172	29.77	1.495	37.97
.116	2.95	.473	12.01	.722	18.34	.962	24.43	1.197	30.40	1.500	38.10
.125	3.18	.481	12.22	.732	18.59	.984	24.97	1.212	30.78	1.510	38.35
.137	3.48	.485	12.32	.750	19.05	.991	25.17	1.234	31.32	1.560	39.62
.141	3.58	.490	12.45	.752	19.10	.995	25.27	1.241	31.52	1.610	40.89
.194	4.93	.527	13.39	.761	19.33	1.000	25.40	1.245	31.62	1.624	41.25
.215	5.46	.530	13.46	.777	19.74	1.001	25.43	1.250	31.75	1.688	42.88
.216	5.49	.537	13.64	.787	19.99	1.010	25.65	1.251	31.78		
.232	5.89	.540	13.72	.804	20.42	1.029	26.14	1.260	32.00		
.234	5.94	.557	14.15	.814	20.68	1.039	26.39	1.279	32.49		

FIGURE 2. Connector intermateability dimensions, series II – Continued.

NOTES:

1. A point at which gauge pin, having the same basic diameter as the mating contact and a square face, touches socket contact spring.
2. Distance from plug shell shoulder to locking point of coupling ring.
3. Figure 6 applies to both plugs and receptacles.
4. “A” initial contact with static seal.
5. The least amount of electrical engagement occurs when the insert faces are at their minimum interference location. When this condition exists, the coupling spring force shall be sufficient to guarantee .024 (0.61 mm) inch compression of the peripheral sealing gasket. Minimum electrical contact engagement is therefore computed with the peripheral sealing gasket compressed .024 (0.61 mm) inch from its MMC position.
6. The gauge features for GG (see main key/keyway polarization detail of figure 7) shall be .010 (0.25 mm) smaller than their MMC at basic location. (See applicable MS standards.)
7. Three holes (design optional) equally spaced within .010 (0.25 mm) shall be provided for visual inspection of lock when mated with receptacle.
8. Insert front surface shall be flat within .005 (0.13 mm) TIR.
9. Diameters F and H shall be concentric within .015 (0.38 mm) TIR.
10. Diameter F with respect to diameter E and diameter H with respect to diameter J shall be concentric at MMC.
11. Diameters H and G shall be concentric within .005 (0.13 mm) TIR at MMC.
12. Diameter W with respect to diameter V shall be concentric at MMC.
13. Diameters U and T shall concentric within .008 (0.20 mm) TIR.
14. Diameters CC to be concentric to diameter U within .005 (0.13 mm) TIR.
15. Dimensions are in inches.
16. Metric equivalents are given for information only.

FIGURE 2. Connector intermateability dimensions, series II – Continued.

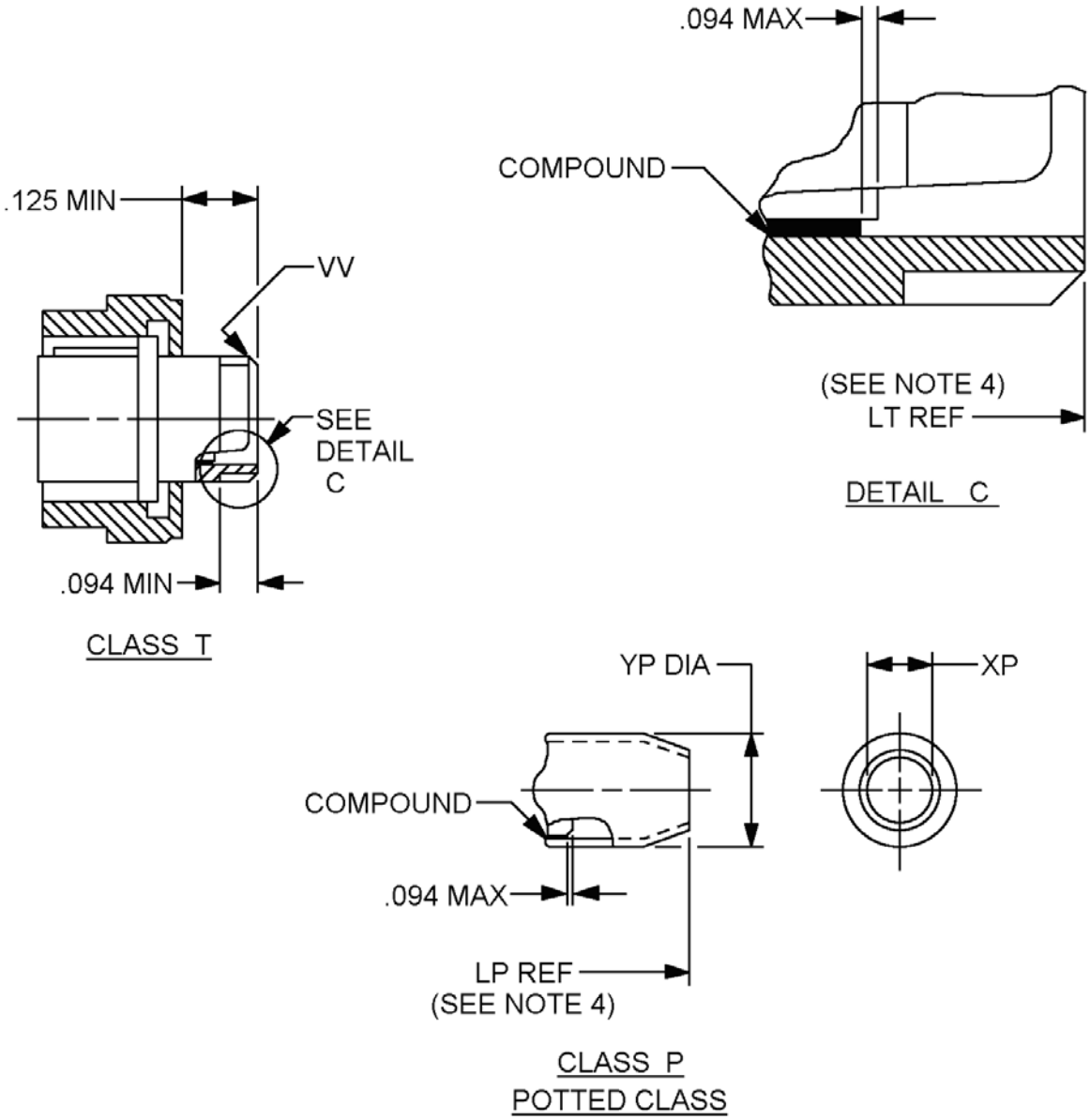

FIGURE 3. Connector accessory interface dimensions, class P, potted class, series I.

Shell size	XP dia min	YP dia max	VV thread class 2A UNEF (plated)
9	.317	.625	.4375-28
11	.434	.750	.5625-24
13	.548	.875	.6875-18
15	.673	1.000	.8125-20
17	.798	1.016	.9375-20
19	.899	1.125	1.0625-18
21	1.024	1.250	1.1875-18
23	1.149	1.375	1.3125-18
25	1.274	1.500	1.4375-18

Inches	mm	Inches	mm
.317	8.05	1.000	25.40
.434	11.02	1.016	25.81
.548	13.92	1.024	26.01
.625	15.88	1.125	28.58
.673	17.09	1.149	29.18
.750	19.05	1.250	31.75
.798	20.27	1.274	32.36
.875	22.23	1.375	34.93
.899	22.83	1.500	38.10

NOTES:

1. Dimensions are in inches
2. Metric equivalents are given for information only.
3. Threads may have modified major diameter.
4. For dimensions of LT and LP, see applicable military standard.

FIGURE 3. Connector accessory interface dimensions, class P, potted class, series I – Continued.

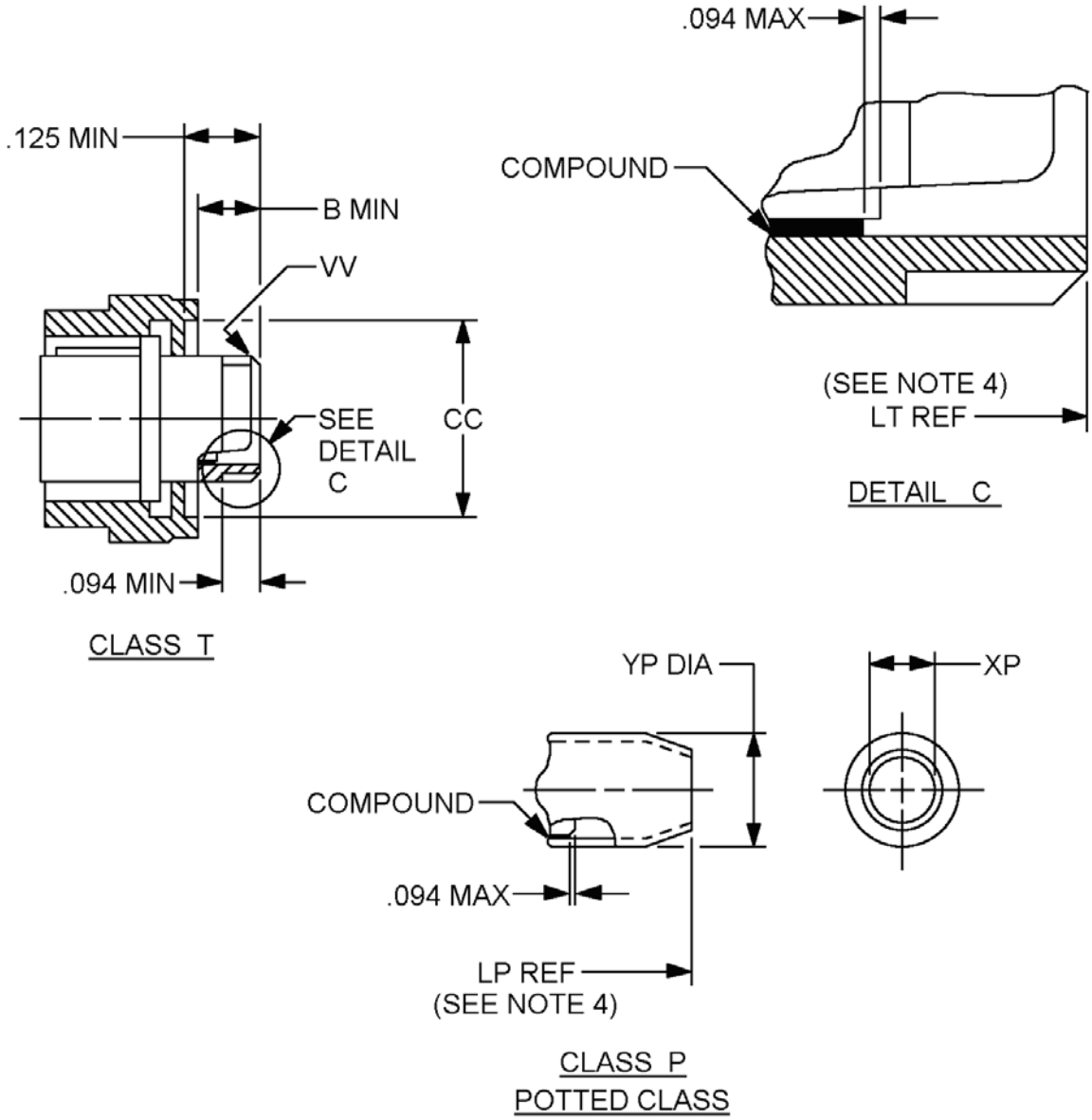

FIGURE 4. Connector accessory interface dimensions, class P, potted class, series II.

Shell size	B min	CC dia min	XP dia min	YP dia max	VV thread class 2A UNEF (plated)
8	.135	.578	.317	.516	.4375-28
10		.719	.434	.641	.5625-24
12		.844	.548	.766	.6875-18
14		.969	.673	.891	.8125-20
16		1.094	.798	1.016	.9375-20
18	.109	1.219	.899	1.125	1.0625-18
20		1.344	1.024	1.250	1.1875-18
22		1.469	1.149	1.375	1.3125-18
24		1.594	1.274	1.500	1.4375-18

Inches	mm	Inches	mm	Inches	mm
.109	2.77	.766	19.46	1.149	29.18
.135	3.43	.798	20.27	1.219	30.96
.317	8.05	.844	21.44	1.250	31.75
.434	11.02	.891	22.63	1.274	32.36
.516	13.11	.899	22.83	1.344	34.14
.548	13.92	.969	24.51	1.375	34.93
.578	14.68	1.016	25.81	1.469	37.31
.641	16.28	1.024	26.01	1.500	38.10
.673	17.09	1.094	27.79	1.594	40.49
.719	18.26	1.125	28.58		

NOTES:

1. Dimensions are in inches.
2. Metric equivalents are given for information only.
3. Threads may have modified major diameter.
4. For dimensions of LT and LP, see applicable military standard.

FIGURE 4. Connector accessory interface dimensions, class P, potted class, series II – Continued.

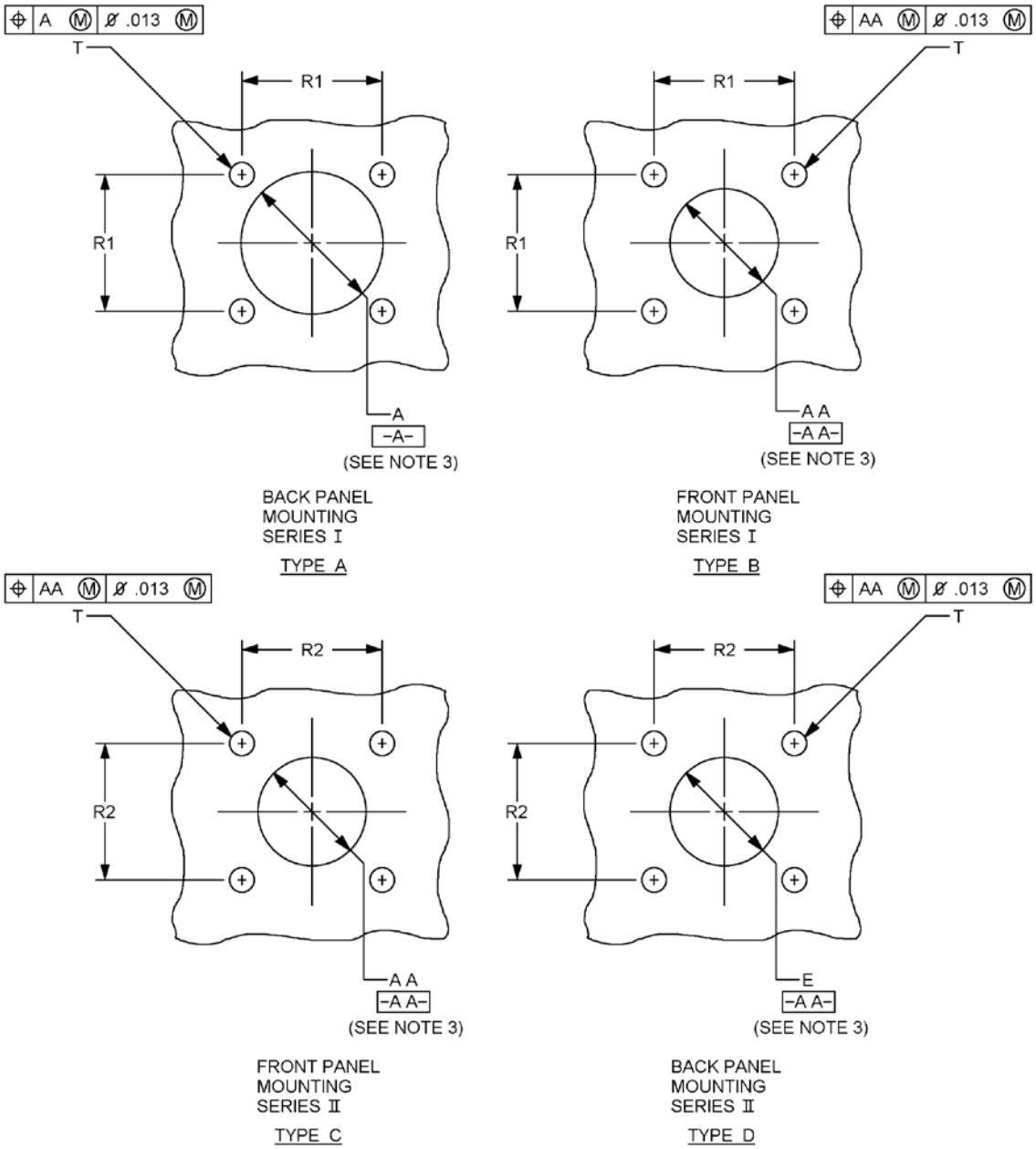

FIGURE 5. Recommended panel dimensions.

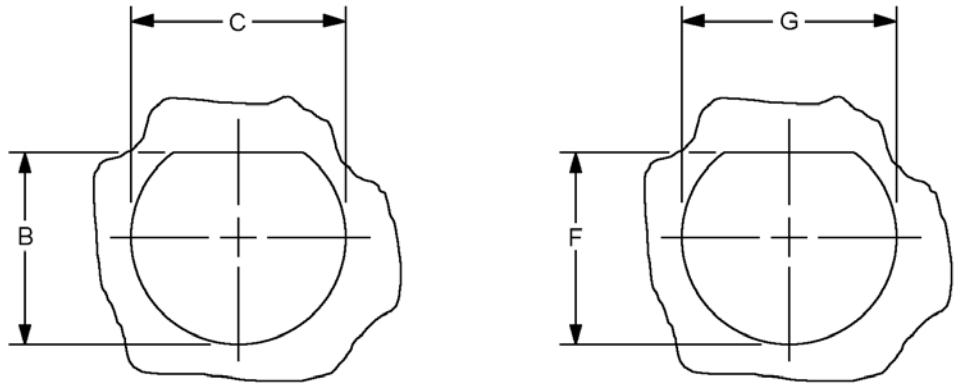

SERIES I
TYPE E

SERIES II
TYPE F

Shell size	A dia min	AA dia min	B +.000 -.010	C +.010 -.000	E dia min	F +.000 -.010	G +.010 -.000	R1	R2	T dia +.005
8-9	.655	.516	.669	.696	.557	.830	.883	.719	.594	.128
10-11	.796	.625	.769	.822	.681	.955	1.007	.812	.719	.128
12-13	.922	.750	.955	1.007	.853	1.084	1.133	.906	812	.128
14-15	1.046	.905	1.084	1.133	.979	1.208	1.259	.969	.906	.128
16-17	1.218	1.016	1.208	1.259	1.103	1.333	1.383	1.062	.969	.128
18-19	1.296	1.140	1.333	1.383	1.229	1.459	1.507	1.156	1.062	.128
20-21	1.422	1.266	1.459	1.507	1.353	1.576	1.633	1.250	1.156	.128
22-23	1.546	1.375	1.584	1.633	1.479	1.701	1.759	1.375	1.250	.154
24-25	1.672	1.483	1.709	1.759	1.603	1.826	1.883	1.500	1.375	.150

NOTES:

1. Dimensions are in inches.
2. Metric equivalents are given for information only.
3. “AA” minimum is the recommended clearance for connectors less accessories.

FIGURE 5. Recommended panel dimensions – Continued.

Inches	mm	Inches	mm	Inches	mm	Inches	mm
.005	0.13	.796	20.33	1.084	27.53	1.422	36.12
.010	0.25	.812	20.62	1.103	28.02	1.459	37.06
.128	3.25	.822	20.88	1.133	28.78	1.479	37.57
.150	3.81	.830	21.08	1.140	28.96	1.483	37.67
.154	3.91	.853	21.67	1.156	29.36	1.500	38.10
.516	13.11	.883	22.43	1.208	30.68	1.507	38.28
.557	14.15	.905	22.99	1.218	30.94	1.546	39.27
.594	15.09	.906	23.01	1.229	31.22	1.576	40.03
.625	15.88	.922	23.42	1.250	31.75	1.584	40.23
.655	16.64	.955	24.26	1.259	31.98	1.603	40.72
.659	16.74	.969	24.61	1.266	32.16	1.633	41.48
.681	17.30	.979	24.87	1.296	32.92	1.672	42.47
.696	17.68	1.007	25.58	1.333	33.86	1.702	43.21
.719	18.26	1.016	25.81	1.353	34.37	1.709	43.41
.750	19.05	1.046	26.57	1.375	34.93	1.759	44.68
.760	19.53	1.062	26.97	1.383	35.13	1.826	46.38
						1.883	47.83

FIGURE 5. Recommended panel dimensions – Continued.

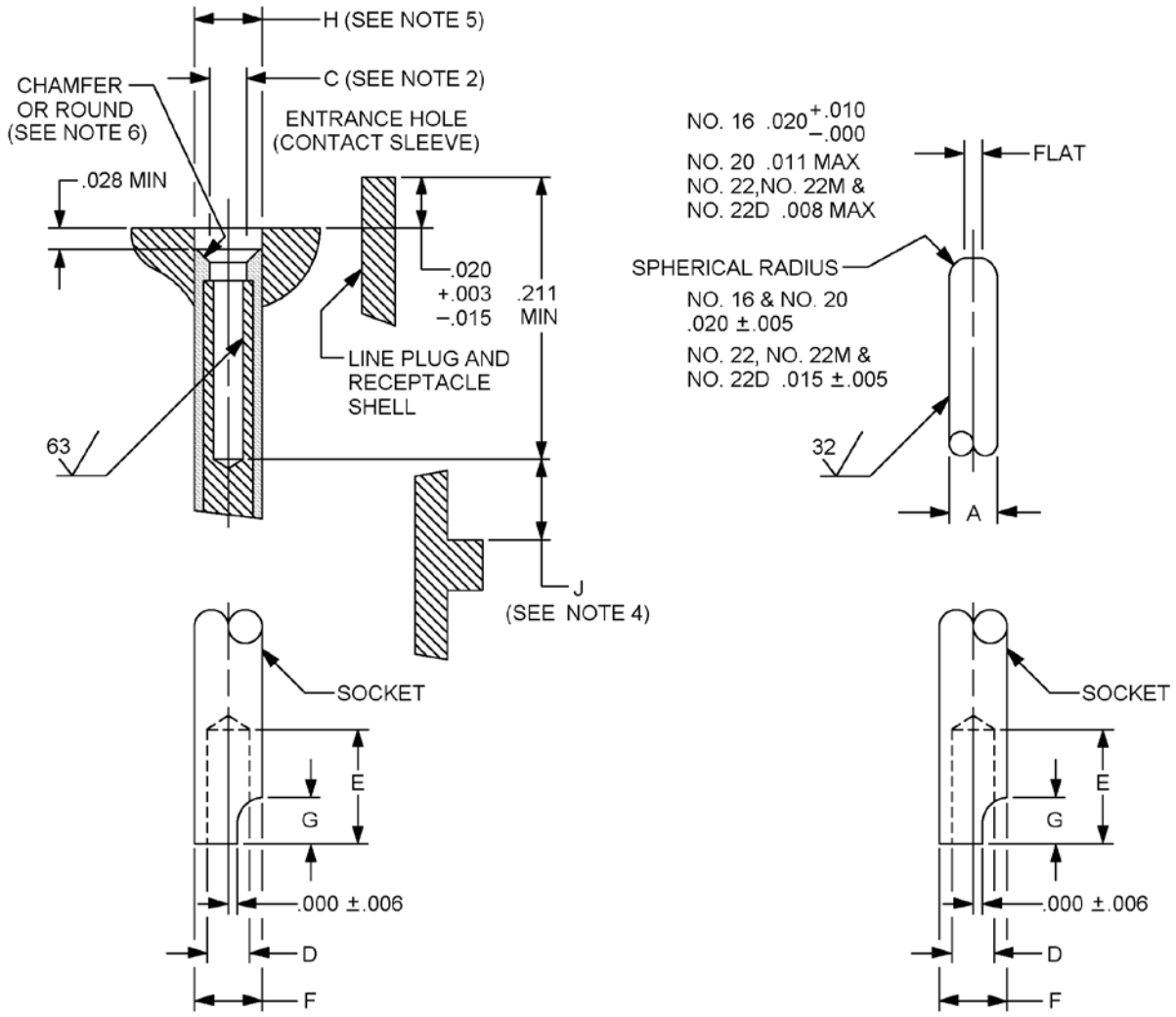

FIGURE 6. Contact configuration and dimensions.

Contact size	A	C min	D	E	F	G	H +.005 -.000	Series I J max	Series II J max
22D	.0305 .0295	.036	.037 .034	.114 .094	.049 .047	.080 .050	.058	.379	.038
22M	.0305 .0295	.036	.033 .028	.114 .094	.046 .043	.080 .050	.058	.379	.038
22	.0305 .0295	.036	.040 .035	.114 .094	.054 .051	.080 .050	.058	.379	.038
20	.041 .039	.045	.048 .042	.145 .125	.066 .060	.100 .068	.085	.379	.038
16	.0635 .0615	.067	.082 .069	.161 .141	.103 .097	.100 .068	.107	.379	.038

Inches	mm	Inches	mm	Inches	mm	Inches	mm	Inches	mm
.028	0.71	.038	0.97	.048	1.22	.066	1.68	.100	2.54
.0295	0.749	.039	0.99	.049	1.24	.067	1.70	.103	2.62
.0305	0.774	.040	1.02	.050	1.27	.068	1.73	.107	2.72
.033	0.84	.041	1.04	.051	1.30	.069	1.75	.114	2.90
.034	0.86	.042	1.07	.054	1.37	.080	2.03	.125	3.18
.035	0.89	.043	1.09	.058	1.47	.082	2.08	.141	3.58
.036	0.91	.045	1.14	.060	1.52	.085	2.16	.145	3.68
.037	0.94	.046	1.17	.0615	1.562	.094	2.39	.161	4.09
		.047	1.19	.0635	1.613	.097	2.46	.379	9.63

NOTES:

1. Dimensions are in inches. Metric equivalents are given for information only.
2. Size 16 contacts shall refuse entry to a .071 (1.80 mm) maximum diameter pin; size 20 contacts shall refuse entry to a .048 (1.22 mm) maximum diameter pin; size 22D contacts shall refuse entry to A .038 (0.97 mm) maximum diameter pin; size 22M contacts shall refuse entry to a .038 (0.97 mm) maximum diameter pin; size 22 contacts shall refuse entry to a .038 (0.97 mm) maximum diameter pin.
3. Dimensions shown affect interchangeability, function, and fit; unless specified, other design features are optional.
4. A .040 ± .001 (1.02 ± .03 mm) diameter pin for size 20 contacts; an .0625 ± .0010 (1.588 ±0.025 mm) diameter pin for size 16 contacts; a .0300 ± .0005 (0.762 ± .013 mm) diameter pin for 22D contacts; a .0300 ± .0005 (0.762 ± .013 mm) diameter pin for 22M contacts; a .0300 ± .0005 (0.762 ± .013 mm) diameter pin for size 22 contacts; must enter socket to the depth indicated; the pin shall be radiused in accordance with the dimensions indicated herein.
5. Dimension “H” is ID of insert entry hole.
6. Sharp edges are not permissible.

FIGURE 6. Contact configuration and dimensions – Continued.

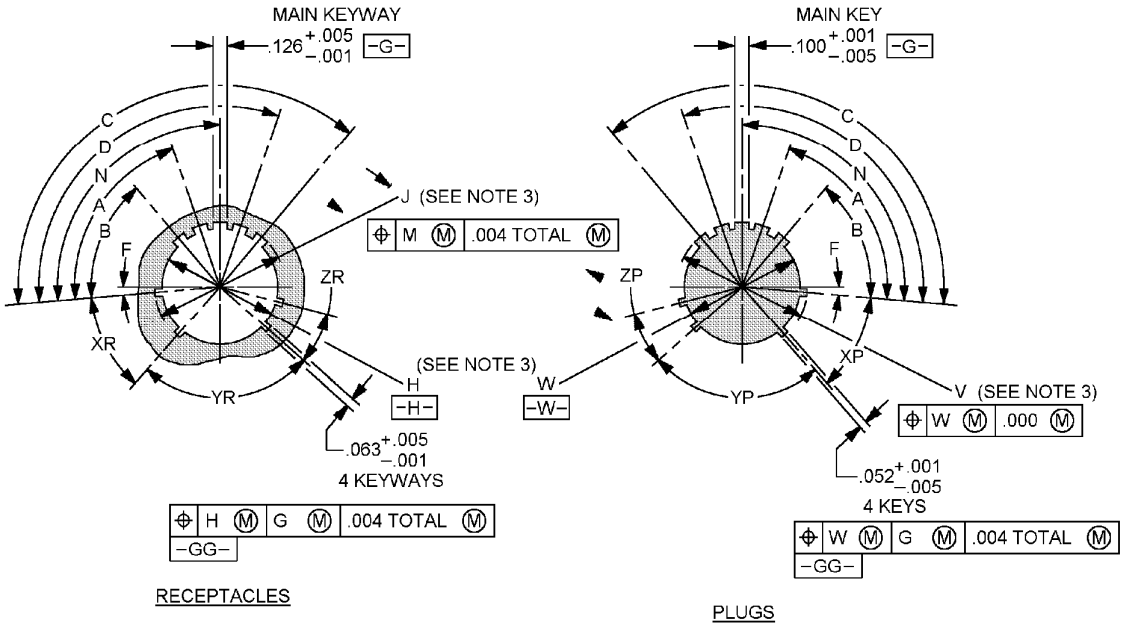

Series I and II
Main key/keyway polarization

FIGURE 7. Connector intermateability dimensions.

Series I assemblies									
Shell size	F	Normal rotation				Alternate letter designation			
		N	XR XP	YR YP	ZR ZP	A	B	C	D
9	5º	95º	45º	88º	27º	77º			113º
11	5º	95º	45º	88º	27º	81º	67º	123º	109º
13	5º	95º	45º	88º	27º	75º	63º	127º	115º
15	5º	95º	45º	88º	27º	74º	61º	129º	116º
17	5º	95º	45º	88º	27º	77º	65º	125º	113º
19	5º	95º	45º	88º	27º	77º	65º	125º	113º
21	5º	95º	45º	88º	27º	77º	65º	125º	113º
23	5º	95º	45º	88º	27º	80º	69º	121º	110º
25	5º	95º	45º	88º	27º	80º	69º	121º	110º

Series II assemblies									
Shell size	F	Normal rotation				Alternate letter designation			
		N	XR XP	YR YP	ZR ZP	A	B	C	D
8	10º	100º	28º	100º	37º	82º			118º
10	10º	100º	28º	100º	37º	86º	72º	128º	114º
12	10º	100º	28º	100º	37º	80º	68º	132º	120º
14	10º	100º	28º	100º	37º	79º	66º	134º	121º
16	10º	100º	28º	100º	37º	82º	70º	130º	118º
18	10º	100º	28º	100º	37º	82º	70º	130º	118º
20	10º	100º	28º	100º	37º	82º	70º	130º	118º
22	10º	100º	28º	100º	37º	85º	74º	126º	115º
24	10º	100º	28º	100º	37º	85º	74º	126º	115º

Series I and II
Main key/keyway polarization

NOTES:

1. All angles are basic.
2. The insert arrangement does not rotate with main key/keyway.
3. For indicated dimensions, see applicable series detail of this figure.
4. Dimensions are in inches.
5. Metric equivalents are given for information only.

FIGURE 7. Connector intermateability dimensions – Continued.

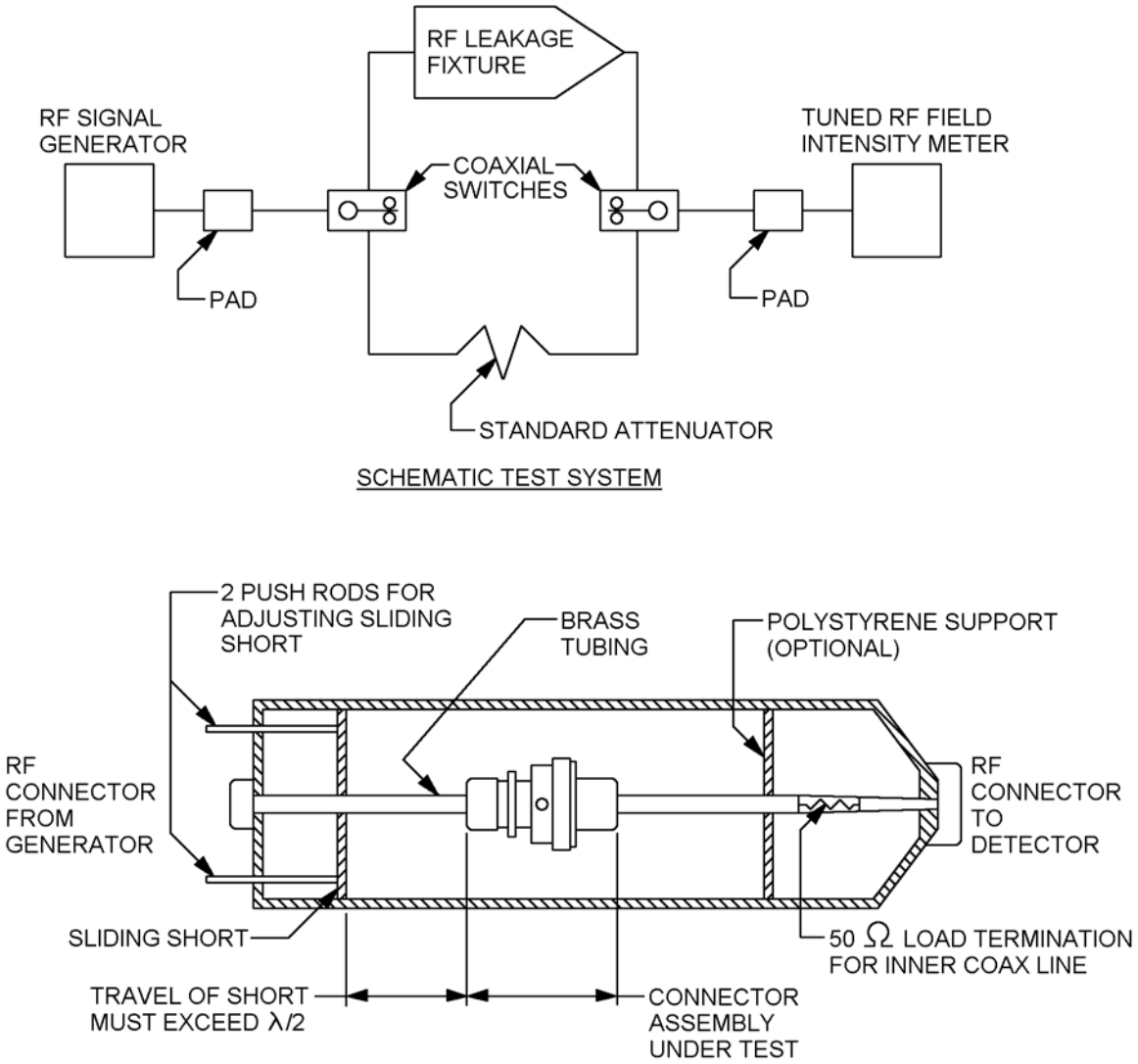

FIGURE 8. RFI leakage test fixture.

CONCLUDING MATERIAL

Custodians:
Air Force - 85
DLA - CC

Review activity:
Air Force - 99

Preparing activity:
DLA - CC

(Project 5935-2016-066)

NOTE: The activities listed above were interested in this document as of the date of this document. Since organizations and responsibilities can change, you should verify the currency of the information above using the ASSIST Online database at https://assist.dla.mil.