MILITARY SPECIFICATION SHEET

(C) RECEPTACLE, PLUG, ELECTRICAL, 15-AMPERE, 125-VOLT, BLADED TYPE, GROUNDED (SYMBOL NO. 1218.3)

(C) This specification is approved for use within the Naval Sea Systems Command, Department of the Navy, and is available for use by all Departments and Agencies of the Department of Defense.

(C) The requirements for acquiring the receptacle described herein shall consist of this specification and the latest issue of MIL-R-2726.

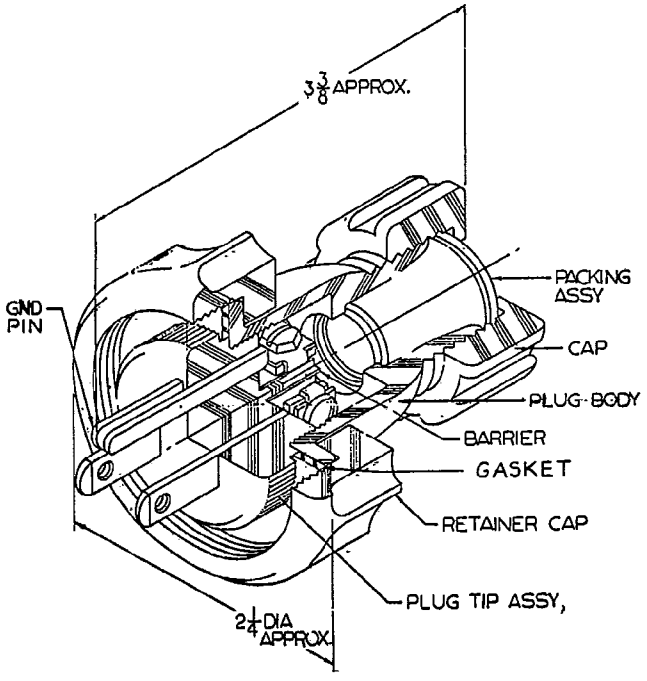

SH 9116

NOTES:
1. Dimensions are in inches. Unless otherwise specified, tolerances are ± 1/64 inch for fractions.
2. Supersedes: Drawing 815-1197230, symbols 1218, 1218.1 and 1218.2.

FIGURE 1. Plug assembly.

(C) denotes changes.

AMSC N/A FSC 5935

DISTRIBUTION STATEMENT A Approved for public release; distribution unlimited

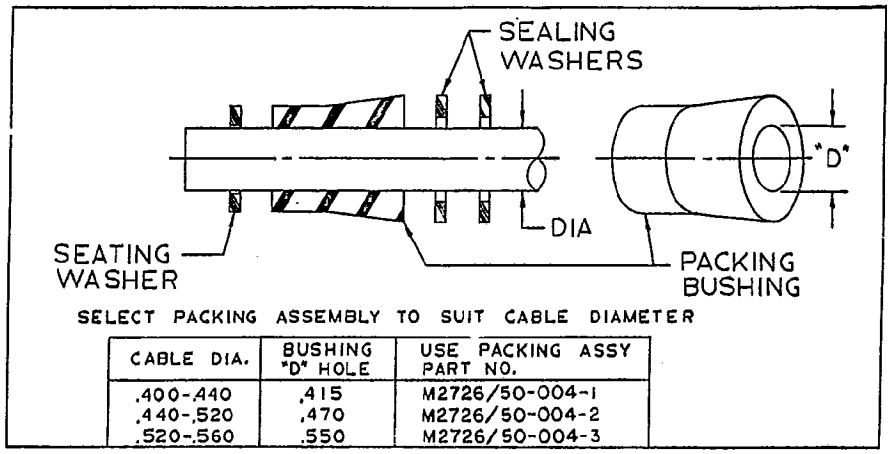

SELECT PACKING ASSEMBLY TO SUIT CABLE DIAMETER

CABLE DIA.	BUSHING "D" HOLE	USE PACKING ASSY PART NO.
.400-.440	.415	M2726/50-004-1
.440-.520	.470	M2726/50-004-2
.520-.560	.550	M2726/50-004-3

SH 1320094

FIGURE 2. Instruction sheet.

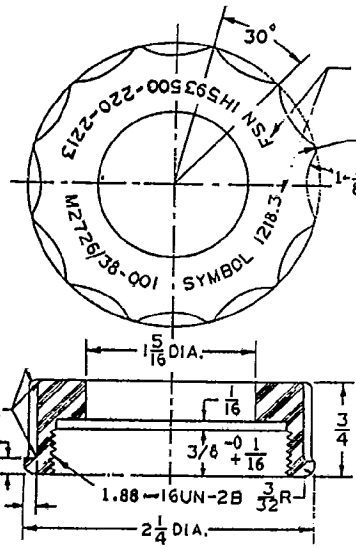

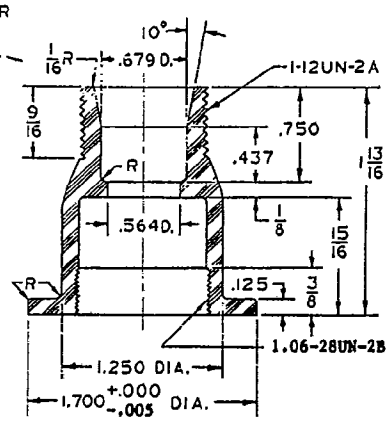

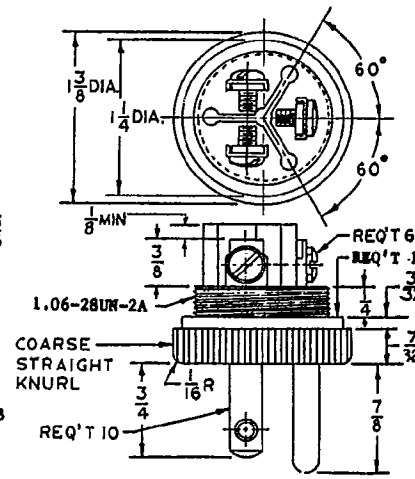

SH 1320095

NOTE: Dimensions are in inches. Unless otherwise specified, tolerances are ± 1/64 inch for fractions and ± 0.005 inch for decimals. Angular tolerance is ± 1/2 degree.

FIGURE 3. Retainer cap. Figure 4. Plug body. Figure 5. Plug tip assembly.

REQUIREMENTS:

1. Dimensions and configurations: See figures 1, 2, 3, 4 and 5.
2. Effectiveness of enclosure: Watertight in accordance with MIL-STD-108 when coupled with mating receptacle.
3. Strain relief: 30 pounds.
4. Material: Plug body and retainer cap - molded polycarbonate (yellow) in accordance with L-P-393; plug tip assembly (contact insulation) shall be molded polycarbonate (yellow) in accordance with L-P-393 or type MAI-60 (yellow) in accordance with MIL-M-14.
5. Cap: MIL-S-19622/10, part number M19622/10-0002, except color shall be yellow and material may be polyamide (nylon) or polycarbonate.
6. Terminals shall be furnished with wire retainers and binding head screws. Ground screw shall be hexagonal head and shall be finished in a distinctive green color. Ground contact shall be nickel-plated.
7. Packing assemblies: MIL-R-2726/50, part numbers M2726/50-004-1, M2726/50-004-2, M2726/50-004-3 shall be furnished with the plug assembly. User shall select size that most nearly fits the cable as shown on figure 2.
8. Mating receptacle: MIL-R-2726/37, part number M2726/37-001; MIL-R-2726/39 (with switch), part number M2726/39-001; MIL-R-2726/73, part number M2726/73-001 (not furnished).
9. Test cables: Type CO-03HOF (3/16) in accordance with MIL-C-3432 - use with M2726/50-004-1 (not furnished).
   In accordance with MIL-C-24643 and MIL-C-24643/3 - use with M2726/50-004-2.
   Type CO-03HOF (3/14) in accordance with MIL-C-3432 - use with M2726/50-004-3 (not furnished).
10. Design: Contact arrangement shall be in accordance with W-C-596/13, part number W-C-596/13-3. Plug tip assembly shall be threaded into plug body. Barriers shall be molded integral with plug tip and shall extend 1/8 minimum above contacts. Contacts may be molded integral with plug tip or staked to prevent removal by pull out force of 30 pounds, minimum. Plug tip shall contain an undercut to retain gasket captive when assembled into plug body.
11. Instruction sheet: An instruction sheet with the information as shown on figure 2 shall be furnished with each plug on paper 4 by 6 inches.
12. Gasket: Rubber, in accordance with MIL-R-900. Gasket shall be 1 3/4-inch outside diameter by 1/16 inch plus 1/32 minus 0 inch thick.
13. Electrical rating: 15-ampere, 125-volt.
14. Intended use: Shipboard, for portable tools, test equipment and battery charging units on radar platforms, open bridges or weatherdecks. Normally used with watertight receptacles but will fit nonwatertight receptacles in accordance with MIL-R-2726/40, MIL-R-2726/43, MIL-R-2726/51, MIL-R-2726/66 and MIL-R-2726/69.
15. Part number: M2726/38-001.

© QUALITY ASSURANCE:

Quality assurance shall be as specified in MIL-R-2726 and table I herein. The first article and quality conformance inspections shall consist of the inspections as specified in table I, in the order shown.

TABLE I. First article and quality conformance inspection.

Inspection	Requirement	Test method	First article	Quality conformance
Examination	3.1, 3.3, 3.4, 3.5, 3.6 and 3.7	4.6.1	X	X
Insulation resistance	3.5.1	4.7.1	X	X
Dielectric withstanding voltage	3.5.2	4.7.2	X	X
Blade strength	3.5.18	4.7.18	X	
Contact resistance	3.5.3.1	4.7.3.1	X	X
Endurance	3.5.5	4.7.5	X	
Salt spray	3.5.11	4.7.11	X	
Contact resistance	3.5.3.1	4.7.3.1	X	
Current load	3.5.12	4.7.12	X	
Vibration	3.5.9	4.7.9	X	
Shock	3.5.10	4.7.10	X	
Effectiveness of enclosure	3.5.4	4.7.4	X	X
Dielectric withstanding voltage	3.5.2	4.7.2	X	
Mechanical abuse	3.5.8	4.7.8	X	
Ball drop impact	3.5.15	4.7.15	X	
Strain relief	3.5.7	4.7.7	X	

Preparing activity:
Navy - SH
(Project 5935-N255-39)