INCH-POUND

MS24285D
14 July 2005
SUPERSEDING
MS24285C
6 May 1968

DETAIL SPECIFICATION SHEET

CONNECTORS, ELECTRICAL, STYLE S, RACK AND PANEL, MINIATURE

Inactive for new design after 8 June 1999.

This specification is approved for use by all Departments and Agencies of the Department of Defense.

The requirements for acquiring the product described herein shall consist of this specification sheet and MIL-DTL-26518.

The Qualified Products List (QPL) associated with this inactive for new design specification will be maintained until acquisition of the product is no longer required, where upon the specification and QPL will be canceled.

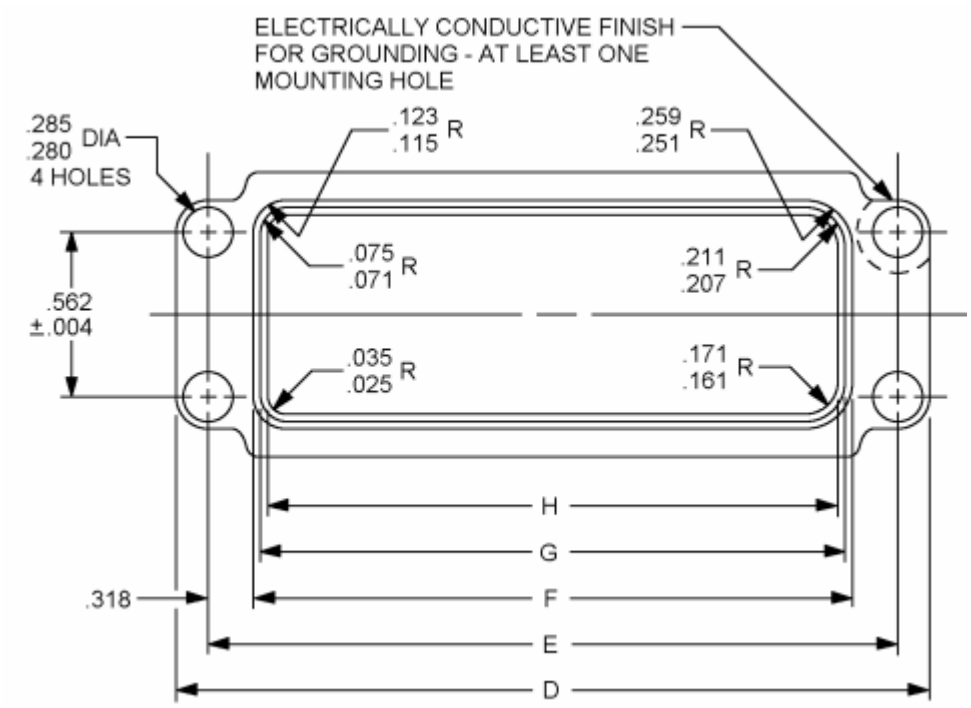

Style S (socket insert)

FIGURE 1. Connector dimensions and configurations.

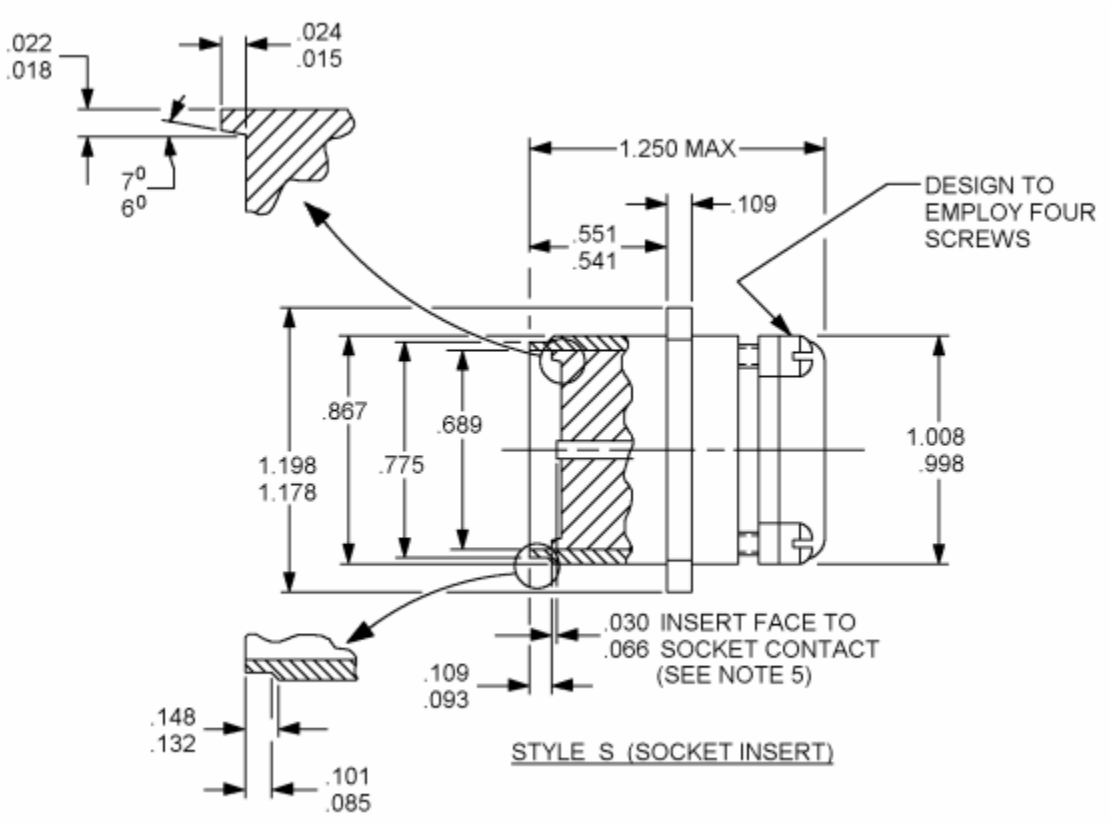

Environment Resistant (R) Receptacles

Shell size	D ±.005	E ±.004	F ±.005	G	H ±.005
A	4.296	3.875	3.239	3.147	3.061
B	2.866	2.445	1.809	1.717	1.631
C	2.421	2.000	1.380	2.888	1.202

FIGURE 1. Connector dimensions and configurations - Continued.

Inches	mm	Inches	mm	Inches	mm
.015	0.38	.161	4.09	1.008	25.60
.018	0.46	.177	4.50	1.178	29.92
.019	0.48	.185	4.70	1.198	30.43
.022	0.56	.207	5.26	1.202	30.53
.025	0.64	.211	5.36	1.250	31.75
.035	0.89	.250	6.35	1.380	35.05
.066	1.68	.253	6.43	1.631	41.43
.075	1.87	.257	6.53	1.717	43.61
.085	2.16	.280	7.11	1.809	45.95
.091	2.31	.285	7.24	2.000	50.80
.093	2.36	.313	7.95	2.421	61.49
.101	2.57	.321	8.15	2.445	62.10
.109	2.77	.385	9.78	2.866	72.80
.117	2.97	.541	13.74	2.888	73.36
.121	3.07	.551	14.00	3.061	77.75
.132	3.35	.689	17.50	3.147	79.93
.148	3.76	.775	19.69	3.239	82.27
.155	3.94	.867	22.02	3.875	98.43
		.998	25.35	4.296	109.12

NOTES:
1. Dimensions are in inches.
2. Metric equivalents are given for information only.
3. Unless otherwise specified tolerances are ±.003 inch (0.08 mm).
4. For insert arrangements see MS24288.
5. Dimension on socket contact location applies when contacts are placed in inserts for inspection or application.

FIGURE 1. Connector dimensions and configurations - Continued.

REQUIREMENTS:

Dimensions and configuration see figure 1.

Materials shall be in accordance with MIL-DTL-26518.

For mating details, see MS24287 and MS24288.

Part or Identifying Number (PIN):

Referenced documents: In addition to MIL-DTL-26518 this document references the following:

MS24287
MS24288

Changes from previous issue. Marginal notations are not used in this revision to identify changes with respect to the previous issue due to the extent of the changes.

CONCLUDING MATERIAL

Custodians:
Air Force - 11
DLA - CC

Review activities:
DLA-IS

Preparing activity:
DLA - CC

(Project 5935-4695-000)

NOTE: The activities listed above were interested in this document as of the date of this document. Since organizations and responsibilities can change, you should verify the currency of the information above using the ASSIST Online database at http://assist.daps.dla.mil.