(B) INACTIVE FOR AIR FORCE NEW DESIGN EQUIPMENT OR MODIFICATION OF EXISTING EQUIPMENT AFTER 14 Nov 77

Use MIL-C-83723, Series III, which are interchangeable.

FED. SUP CLASS
5935

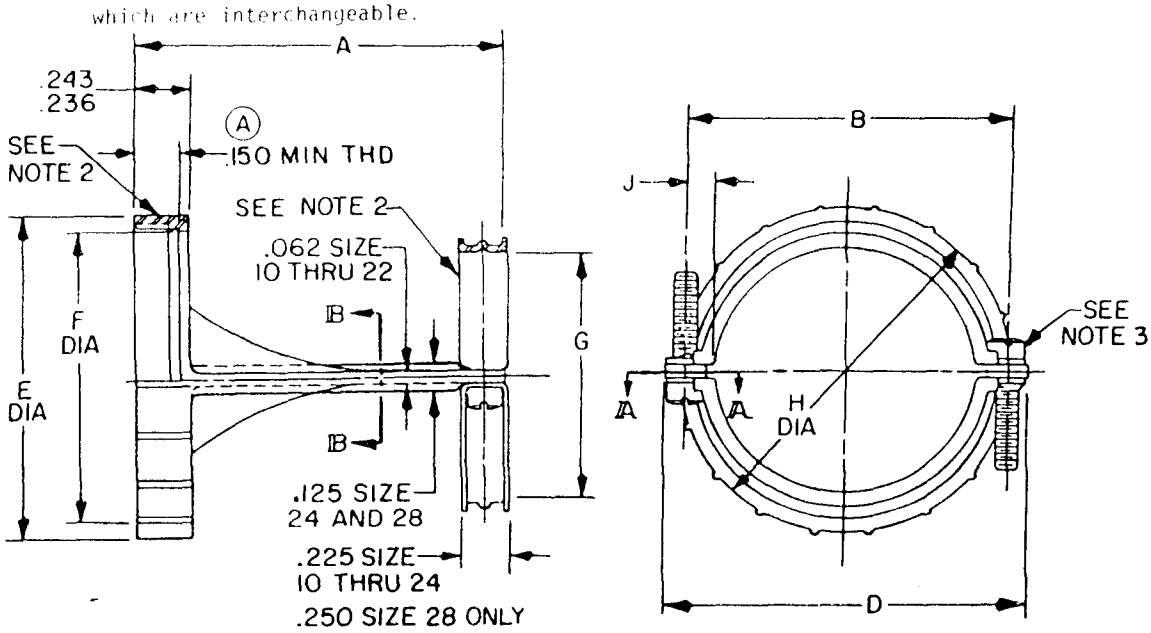


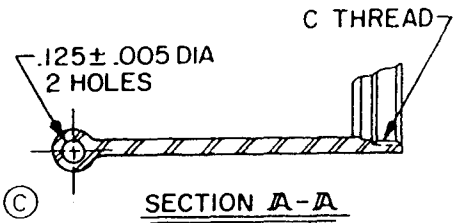


(C) SECTION A-A

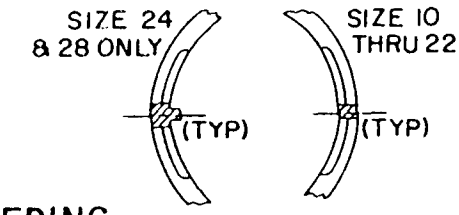


SECTION B-B

# CANCELED WITH NO SUPERSEDING STANDARD

| Military part number | Shell size | A ±.015 | B ±.010 | C nom. -36NS-2B | D ±.015 | E ±.010 | F ±.010 | G ±.015 | H ±.015 | J ±.010 | Weight (lbs) ±5% |
|---|---|---|---|---|---|---|---|---|---|---|---|
| MS27658-12 | 12 | 1.070 | .677 | .7334 | .863 | .788 | .643 | .435 | .768 | .094 | .015 |
| MS27658-14 | 14 | 1.170 | .748 | .8032 | .934 | .862 | .717 | .504 | .842 | .094 | .017 |
| MS27658-16 | 16 | 1.270 | .923 | .9302 | 1.109 | .989 | .844 | .686 | .969 | .115 | .018 |
| MS27658-18 | 18 | 1.370 | 1.039 | 1.0362 | 1.225 | 1.095 | .950 | .794 | 1.075 | .115 | .019 |
| MS27658-22 | 22 | 1.570 | 1.298 | 1.2862 | 1.484 | 1.345 | 1.200 | 1.038 | 1.325 | .126 | .025 |
| MS27658-24 | 24 | 1.670 | 1.427 | 1.4111 | 1.613 | 1.595 | 1.329 | 1.162 | 1.575 | .128 | .044 |
| MS27658-28 | 28 | 1.870 | 1.658 | 1.6611 | 1.844 | 1.845 | 1.579 | 1.412 | 1.825 | .126 | .072 |

NOTES:
1. All dimensions are in inches and are after plating.
2. Material: Cable clamp - passivated stainless steel.
   Clamp sector - passivated 300 series stainless steel.
3. Screw: No. 4-40 fillister head machine, stainless steel.
4. Referenced documents shall be of the issue in effect on date of invitation for bid.
5. For design feature purposes this standard takes precedence over procurement documents referenced herein.

APPROVED 15 Nov 71 REVISED (A) 12 MAR 73 (B) 14 Nov 77 (C) 17 FEB 88

| | | | |
|---|---|---|---|
| P.A. AF-85<br>Other Cust | International interest | TITLE<br>LONG SUPPORT, CABLE, ELECTRICAL CONNECTOR (FOR CLASS E AND K CONNECTORS) | MILITARY STANDARD<br>MS 27658(USAF) |
| Procurement Specification<br>MIL-C-26500 | | SUPERSEDES: | PAGE 1 OF 1 |

5935-F319-06

(LIMITED COORDINATION)

AMSC N/A

DISTRIBUTION STATEMENT A. Approved for public release; distribution is unlimited.

☆U.S. GOVERNMENT PRINTING OFFICE: 1988 — 505-033/90751

This military standard is approved for use by Engineering and Technical Support Division, AFLC/LOIE, Department of the Air Force and is available for use by all Departments and Agencies of the Department of Defense.

Reviewer activities: AF - 11, 17, 99
DLA - ES