INCH-POUND

MS3475G
w/AMENDMENT 1
27 October 2015
SUPERSEDING
MS3475G
11 March 2015

DETAIL SPECIFICATION SHEET

CONNECTORS, PLUG, ELECTRICAL, RFI SHIELDED, SERIES 2, CRIMP TYPE, BAYONET COUPLING, CLASSES A, D, L, T, W AND K

Reactivated after 1 March 2007, and may be used for new and existing designs and acquisitions.

This specification is approved for use by all Departments and Agencies of the Department of Defense.

The requirements for acquiring the product described herein shall consist of this specification sheet and MIL-DTL-26482.

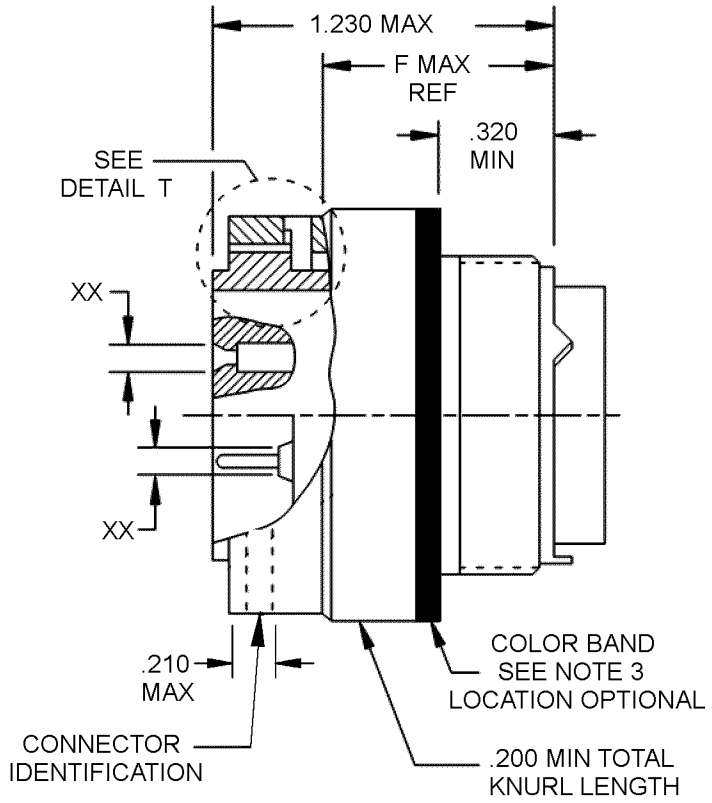

NOTE: For “XX”, see note 5 and table I for contact cavities requiring reduced dimensions.

FIGURE 1. Plug, dimensions.

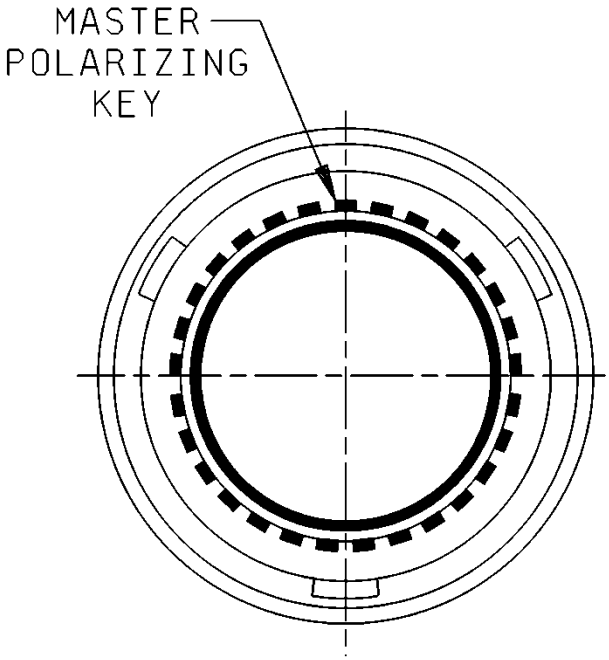

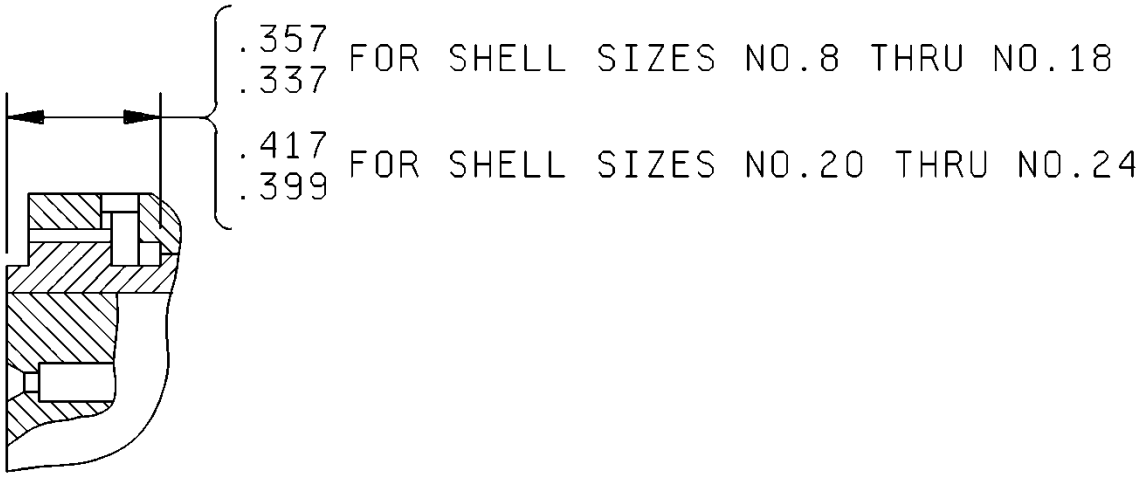

FIGURE 1. Plug, dimensions - Continued.

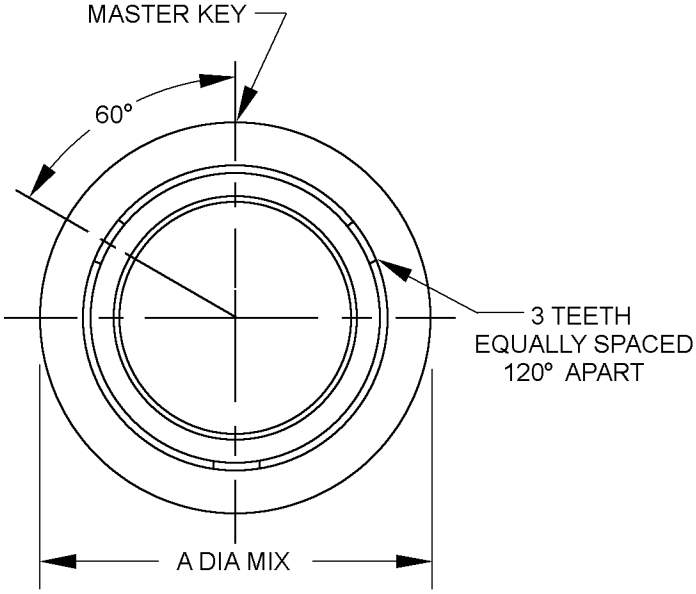

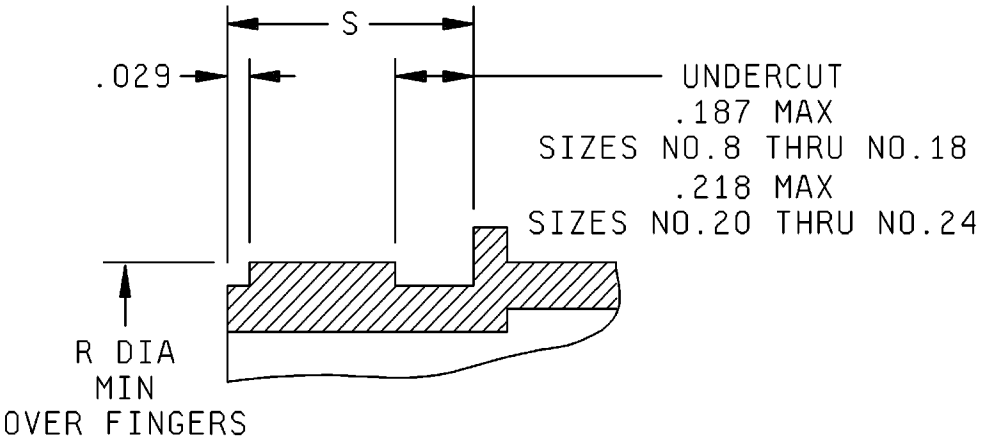

DETAIL T
(COUPLING RING REMOVED
FOR CLARITY)

FIGURE 1. Plug, dimensions - Continued.

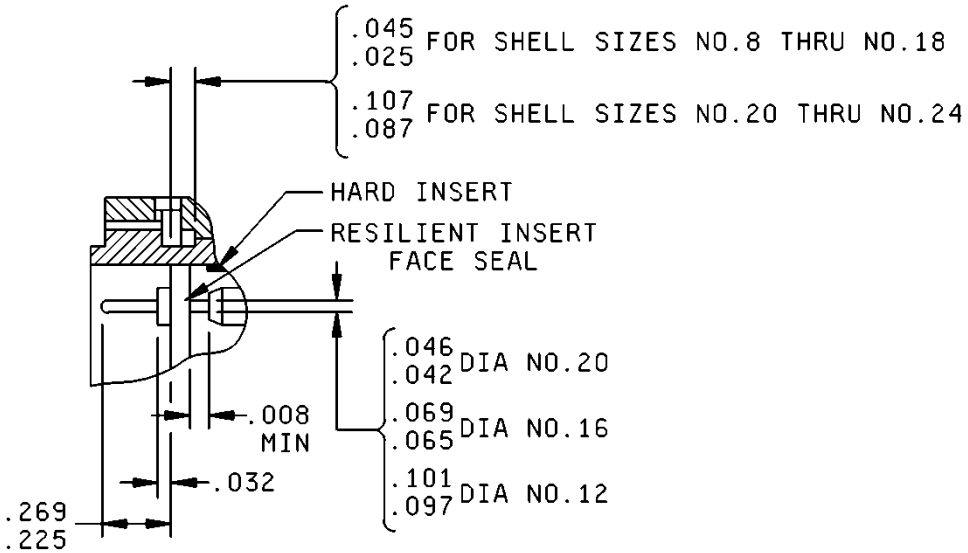

FIGURE 1. Plug, dimensions - Continued.

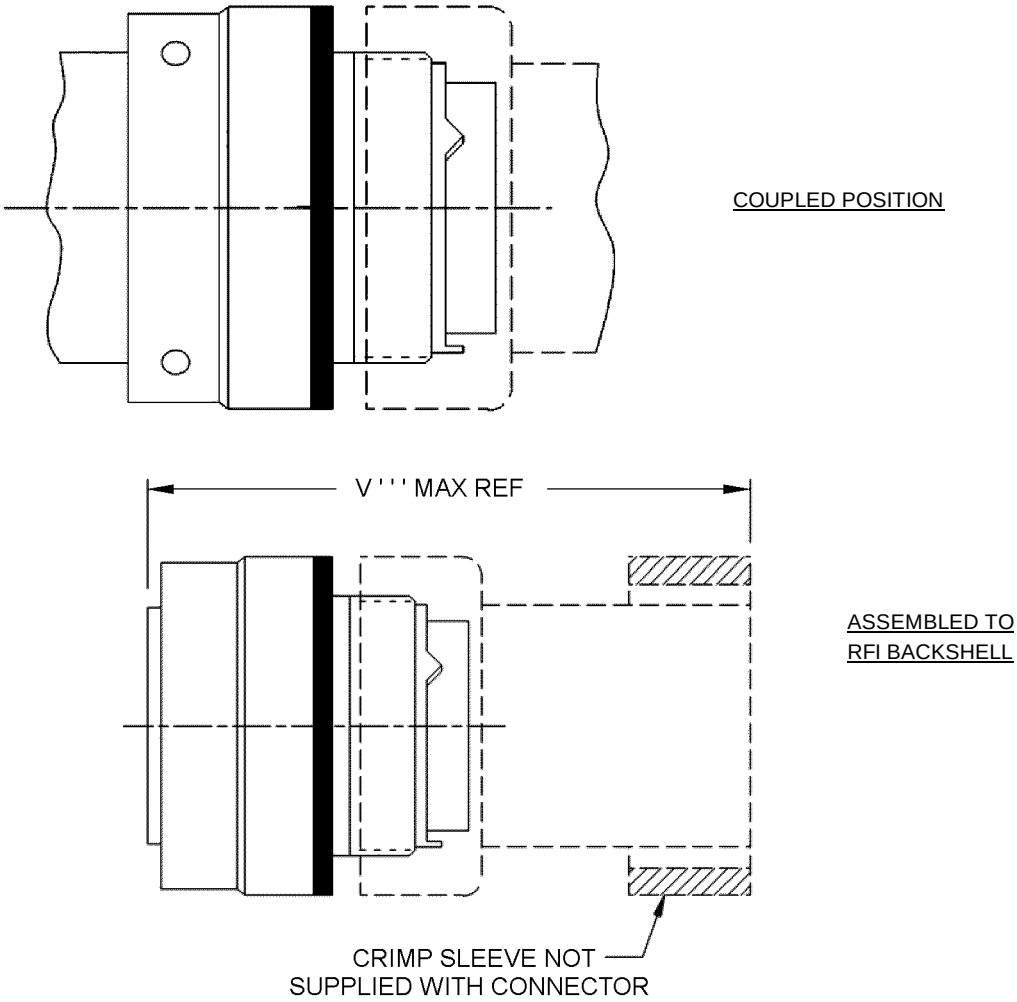

FIGURE 1. Plug, dimensions - Continued.

Shell size	A	F	R	S	V'''	Max weight lbs (grams) 1/	
						Pin	Socket
8	.782 (19.86)	.887 (22.53)	.369 (9.37)	.363 (9.22) .343 (8.71)	2.334 (59.28)	.0204 (9.26)	.0216 (9.81)
10	.926 (23.52)	.887 (22.53)	.497 (12.62)		2.334 (59.28)	.0406 (18.43)	.0421 (19.11)
12	1.043 (26.49)	.887 (22.53)	.614 (15.60)		2.334 (59.28)	.0505 (22.93)	.0536 (24.33)
14	1.183 (30.05)	.887 (22.53)	.739 (18.77)		2.334 (59.28)	.0639 (29.01)	.0692 (31.42)
16	1.305 (33.15)	.887 (22.53)	.864 (21.95)		2.334 (59.28)	.0788 (35.77)	.0880 (39.95)
18	1.391 (35.33)	.887 (22.53)	.969 (24.61)		2.334 (59.28)	.0864 (39.22)	.0957 (43.44)
20	1.531 (38.89)	.825 (20.96)	1.094 (27.79)	.425 (10.80) .405 (10.29)	2.334 (59.28)	.1016 (46.12)	.1114 (50.57)
22	1.656 (42.06)	.825 (20.96)	1.219 (30.96)		2.334 (59.28)	.1241 (56.34)	.1363 (61.88)
24	1.777 (45.14)	.825 (20.96)	1.344 (34.14)		2.334 (59.28)	.1400 (63.56)	.1916 (86.98)

1/ Less contacts and accessories. Maximum weights do not apply to class S.

Inches	mm	Inches	mm	Inches	mm	Inches	mm
.008	0.20	.065	1.66	.187	4.75	.320	8.13
.025	0.64	.069	1.75	.200	5.08	.337	8.56
.029	0.74	.087	2.21	.218	5.54	.357	9.07
.032	0.81	.097	2.46	.225	5.72	.399	10.13
.042	1.07	.101	2.57	.269	6.83	.419	10.64
.045	1.14	.107	2.72	.200	5.08	1.230	31.24
.046	1.17						

NOTES:

1. Dimensions are in inches. Metric equivalents are given for information only and are in parentheses.
2. Unless otherwise specified, tolerances are ± .005 (0.13 mm) for 3 place decimals, ± .01 (0.3 mm) for 2 place decimals, and ± 1° for all angles.
3. Color bands: .070 ± .031 (1.78 ± 0.79 mm) wide, color blue.
4. Connector assembly must be used with a backshell. Backshells must be procured separately. See SAE-AS85049 for applicable backshells.
5. Insert arrangements requiring reduced diameters for raised seal barrier on outer row of contact cavities as indicated.

FIGURE 1. Plug, dimensions - Continued.

TABLE I. Contact cavities requiring reduced diameters (XX) for pins and sockets in outer row of contact cavities. 1/

Shell size	Insert arrangement	Contact cavities
8	-33 & -98	A, B, C
12	-10	C, G
14	-12	A, B, C, D, E, F, G, H
14	-18	A, C, E, G, J, L
14	-19	B, D, F, H, K, M
16	-26	A, B, C, D, E, F, G, H, J, K, L, M, N, P, R
18	-32	A, B, C, D, E, F, G, H, J, K, L, M, N, P, R, S, T
22	-41	A, B, C, D, E, F, G, H, J, K, L, M, N, P, R, S, T, U, V, W, X, Y

1/ The reduced diameter "XX" refers to the diameters of the raised seal barriers (pin barrier rings) or lead-in chamfers (socket entry holes) to ensure proper sealing of pin and socket after mating. See MIL-DTL-26482, connector intermateability control dimensions figure (series 1 and series 2) for reduced diameter "XX" for contact size 20 only.

REQUIREMENTS:

Dimensions and configuration: See figure 1 and table I.

Connector mating: This connector mates with MS3470, MS3471, MS3472, MS3473, MS3474, MS3477 and MS3479.

Connectors will mate with MS3115 (dummy stowage receptacle) and the following series 1 receptacles provided both mating connectors contain a full compliment of power contacts: MS3110, MS3112, MS3113, MS3114, MS3119, MS3120, MS3122, MS3124, MS3127 and MS3128.

Intermateability and rear accessory interchangeability dimensions are in accordance with MIL-DTL-26482.

Class E is cancelled and replaced by class L. Class Z is cancelled and superseded by class K.

This specification sheet supersedes MIL-C-83723/42 and MIL-C-83723/43.

For insert arrangement, see MIL-STD-1669.

Insert arrangements requiring reduced diameters for raised seal barriers or lead-in chamfers on outer row of contact cavities as indicated, see table I.

Connector identification marking shall be in accordance with MIL-DTL-26482. Example: MS3475L----, minimum height does not apply to shell sizes 8, 10 and 12.

Part or Identifying Number (PIN) example:

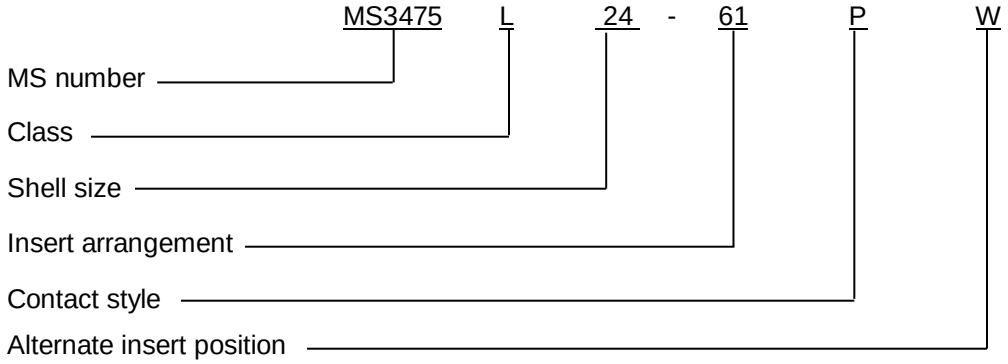

Amendment notations. The margins of this specification are marked with vertical lines to indicate modifications generated by this amendment. This was done as a convenience only and the Government assumes no liability whatsoever for any inaccuracies in these notations. Bidders and contractors are cautioned to evaluate the requirements of this document based on the entire content irrespective of the marginal notations.

Referenced documents. In addition to MIL-DTL-26482, this document references the following:

MS3110
MS3112
MS3113
MS3114
MS3115
MS3119
MS3120
MS3122
MS3124
MS3127
MS3128
MS3470
MS3471
MS3472
MS3473
MS3474
MS3477
MS3479
MIL-STD-1669
SAE-AS85049

CONCLUDING MATERIAL

Custodians:
Army – CR
Navy – AS
Air Force – 85
DLA – CC

Review activities:
Army – AR, AV
Navy – EC, SH
Air Force – 99

Preparing activity:
DLA – CC

(Project 5935–2015-225)

NOTE: The activities listed above were interested in this document as of the date of this document. Since organizations and responsibilities can change, you should verify the currency of the information above using the ASSIST Online database at https://assist.dla.mil.