INCH-POUND

MS3185B
12 September 2013
SUPERSEDING
MS3185A
15 February 1967

DETAIL SPECIFICATION SHEET

MOLD, POTTING, AND ADAPTER, ELECTRICAL CONNECTOR (FOR MIL-DTL-26482, SERIES 1, CLASS P)

Inactive for new design after 12 September 2013.

This specification is approved for use by all Departments and Agencies of the Department of Defense.

The requirements for acquiring the product described herein shall consist of this specification sheet and MIL-DTL-26482.

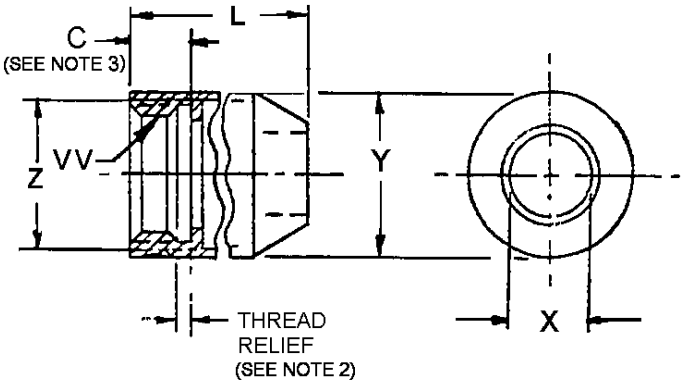

NOTES:

1. Dimensions are in inches. Metric equivalents are given for information only.
2. Thread relief must be larger than one full thread to allow potting compound to fill thread relief when boot is bottomed on mating connector accessory thread.
3. When a separate metal threaded ring is provided, ring shall be .125 minimum thickness having an interference fit with the boot. The separate metal ring shall be mandatory on the 75-90 degree elbow.

FIGURE 1. Mold, potting, straight boot.

Straight mold							
Size	Part number	VV class 2B thread	C min perf thd	L max	X dia min ID	Y dia max OD	Z dia min ID
8	MS3185-8-1	7/16-28	.199	.825	.317	.608	.386
10	MS3185-10-1	9/16-24			.433	.734	.503
12	MS3185-12-1	11/16-24			.548	.858	.628
14	MS3185-14-1	13/16-20			.673	.984	.733
16	MS3185-16-1	15/16-20			.798	1.110	.868
18	MS3185-18-1	1-1/16-18			.899	1.234	.985
20	MS3185-20-1	1-3/16-18	.287	.915	1.024	1.360	1.110
22	MS3185-22-1	1-5/16-18			1.149	1.484	1.235
24	MS3185-24-1	1-7/16-18	.199		1.274	1.610	1.362

Inches	mm	Inches	mm	Inches	mm	Inches	mm
.199	5.06	.608	15.44	.868	22.05	1.250	31.75
.287	7.29	.628	15.95	.899	22.83	1.274	32.36
.317	8.05	.673	17.09	.915	23.24	1.360	34.54
.386	9.80	.733	18.62	.984	24.99	1.362	34.59
.433	11.00	.734	18.64	.985	25.02	1.484	37.69
.503	12.78	.798	20.27	1.024	26.01	1.610	40.89
.548	13.91	.858	21.79	1.235	31.37		

FIGURE 1. Mold, potting, straight boot – Continued.

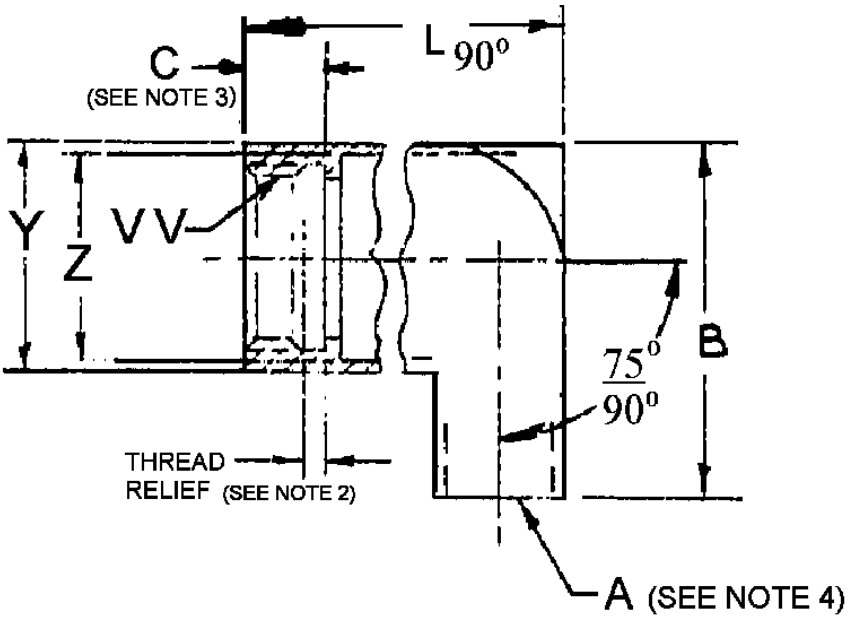

NOTES:

1. Dimensions are in inches. Metric equivalents are given for information only.
2. Thread relief must be larger than one full thread to allow potting compound to fill thread relief when boot is bottomed on mating connector accessory thread.
3. When separate metal threaded ring is provided, ring shall be .125 minimum thick having an interference fit with the boot. The separate metal ring shall be mandatory on the 75-90 degree elbow.
4. Entrance configuration optional with indicated cross-sectional area.

Elbow mold									
Size	Part number	VV class 2B thread	A min cross-sec area (in^2)	B max	C min perf thd	L 75-90 deg max	X dia min ID	Y dia max OD	Z dia min ID
8	MS3185-8-2	7/16-28	.078	1.030	.199	1.125	.317	.608	.386
10	MS3185-10-2	9/16-24	.147	1.125		1.250	.433	.734	.503
12	MS3185-12-2	11/16-24	.190	1.250		1.344	.548	.858	.628
14	MS3185-14-2	13/16-20	.226	1.297		1.453	.673	.984	.733
16	MS3185-16-2	15/16-20	.304	1.375		1.516	.798	1.110	.868
18	MS3185-18-2	1-1/16-18	.532	1.469		1.594	.899	1.234	.985
20	MS3185-20-2	1-3/16-18	.619	1.700	.287	1.750	1.024	1.360	1.110
22	MS3185-22-2	1-5/16-18	.690	1.703		1.828	1.149	1.484	1.235
24	MS3185-24-2	1-7/16-18	.806	2.100	.199	2.125	1.274	1.610	1.362

FIGURE 2. Mold, potting, elbow, 75-90 degrees.

Inches	mm	Inches	mm	Inches	mm	Inches	mm
.078	1.98	.733	18.62	1.235	31.37	1.610	40.89
.147	3.73	.734	18.64	1.250	31.75	1.700	43.18
.190	4.83	.798	20.27	1.274	32.36	1.703	43.26
.226	5.74	.806	20.47	1.297	32.94	1.750	44.45
.304	7.72	.858	21.79	1.344	34.14	1.828	46.43
.317	8.05	.868	22.05	1.360	34.54	2.100	53.34
.386	9.80	.899	22.83	1.362	34.59	2.125	53.98
.433	11.00	.984	24.99	1.370	34.80		
.532	13.51	.985	25.02	1.453	36.91		
.548	13.91	1.024	26.01	1.469	37.31		
.608	15.44	1.030	26.16	1.484	37.69		
.619	15.72	1.110	28.19	1.516	38.51		
.690	17.53	1.125	28.56	1.594	40.49		

FIGURE 2. Mold, potting, elbow, 75-90 degrees – Continued.

REQUIREMENTS:

Dimensions and configurations: See figures 1 and 2.

Use: This potting form is used with MIL-DTL-26482, class P connectors.

Materials:

Boot body or plastic parts – Translucent nylon.
Metal threaded ring - Aluminum.

Minimum plastic wall thickness: .020 inches.

Intermateability dimensions are in accordance with MIL-DTL-26482.

Part or Identifying Number (PIN) example:

MS3185 - 10 - 1

MS number

Size

Boot geometry
- 1 (straight)
- 2 (75-90 degree elbow)

Changes from previous issue. Marginal notations are not used in this revision to identify changes with respect to the previous issue due to the extent of the changes.

Referenced documents. This document references MIL-DTL-26482.

CONCLUDING MATERIAL

Custodians:
Army - CR
Navy - AS
Air Force - 85
DLA – CC

Review Activity:
Air Force - 99

Preparing activity:
DLA - CC

(Project 5935-2012-226)

NOTE: The activities listed above were interested in this document as of the date of this document. Since organizations and responsibilities can change, you should verify the currency of the information above using the ASSIST Online database at https://assist.dla.mil.