INCH-POUND

MS3116E
12 September 2013
SUPERSEDING
MS3116D
19 August 1976

DETAIL SPECIFICATION SHEET

CONNECTORS, PLUG, ELECTRICAL, SOLDER TYPE, STRAIGHT, BAYONET COUPLING, SERIES 1, CLASSES E, F, J AND P

Inactive for new design after 15 December 1998,
and is no longer used, except for replacement purposes.

This specification is approved for use by all Departments and Agencies of the Department of Defense.

The requirements for acquiring the product described herein shall consist of this specification sheet and MIL-DTL-26482.

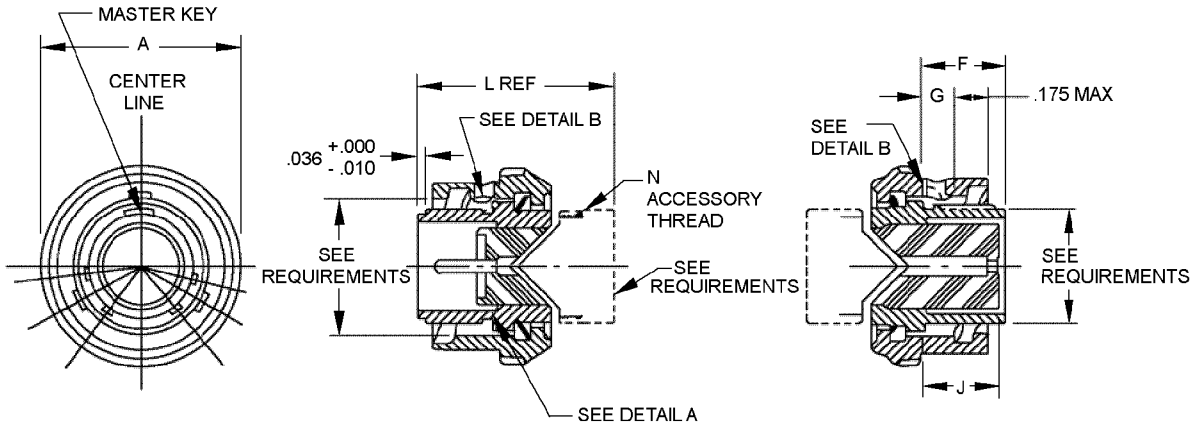

STYLE P
PIN INSERT

STYLE S
SOCKET INSERT

FIGURE 1. Plug, classes E, F, J, and P.

AMSC N/A

FSC 5935

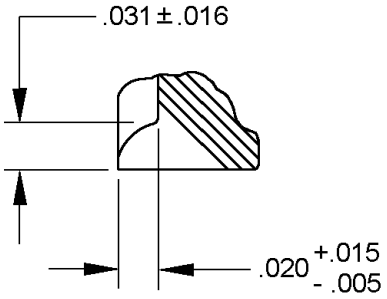

DETAIL A

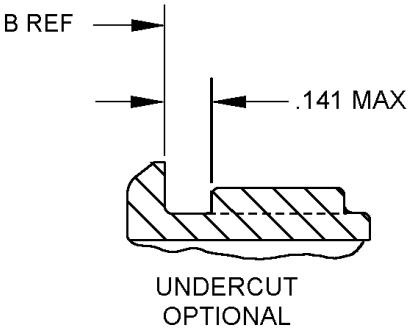

DETAIL B

FIGURE 1. Plug, classes E, F, J and P - Continued.

<table>
<tr><th>Shell size</th><th>A dia overall</th><th>F ± .010 shoulder location</th><th>G ± .020 bay lock location</th><th>J + .020 / - .000 socket insert location</th><th>N class 2A accessory thread UNEF</th></tr>
<tr><td>8</td><td>.782 (19.86)</td><td rowspan="6">.353 (8.97)</td><td rowspan="8">.113 (2.87)</td><td rowspan="7">.337 (8.56)</td><td>.438-28</td></tr>
<tr><td>10</td><td>.926 (23.52)</td><td>.562-24</td></tr>
<tr><td>12</td><td>1.043 (26.49)</td><td>.6875-24</td></tr>
<tr><td>14</td><td>1.183 (30.05)</td><td>.8125-20</td></tr>
<tr><td>16</td><td>1.305 (33.15)</td><td>.9375-20</td></tr>
<tr><td>18</td><td>1.391 (35.33)</td><td>1.0625-18</td></tr>
<tr><td>20</td><td>1.531 (38.89)</td><td rowspan="3">.415 (10.54)</td><td rowspan="3">.399 (10.13)</td><td>1.1875-18</td></tr>
<tr><td>22</td><td>1.656 (42.06)</td><td>1.3125-18</td></tr>
<tr><td>24</td><td>1.777 (45.14)</td><td>.152 (3.86)</td><td>1.4375-18</td></tr>
</table>

FIGURE 1. Receptacle, classes E, F, J, and P - Continued.

Inches	mm	Inches	mm
.005	0.13	.020	0.51
.010	0.25	.031	0.79
.015	0.38	.036	0.91
.016	0.41	.141	3.58

NOTES:
1. Dimensions are in inches.
2. Metric equivalents are given for information only.
3. True position (TP) tolerances specified are in accordance with ASME-Y14.5.

FIGURE 1. Plug, classes E, F, J and P - Continued.

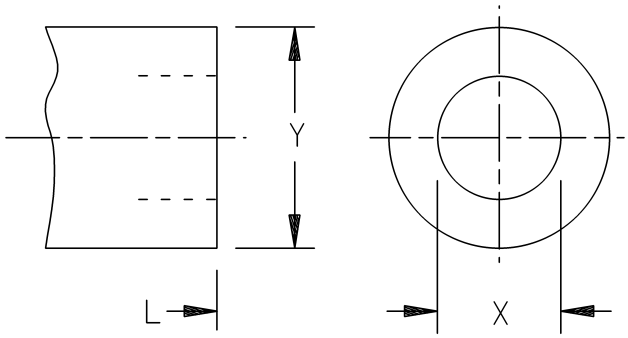

CLASS E, REAR ACCESSORY CONFIGURATION

Shell size	L max overall length	X dia min ID	Y dia max OD
8	1.328 (33.73)	.259 (6.58)	.608 (15.44)
10		.359 (9.12)	.734 (18.64)
12		.469 (11.91)	.858 (21.79)
14		.589 (14.96)	.984 (24.99)
16		.717 (18.21)	1.110 (28.19)
18		.779 (19.79)	1.234 (31.34)
20	1.453 (36.91)	.901 (22.89)	1.360 (34.54)
22		1.009 (25.63)	1.484 (37.69)
24	1.510 (38.35)	1.123 (28.52)	1.610 (40.89)

NOTES:
1. Dimensions are in inches.
2. Metric equivalents are given for information only.
3. True position (TP) tolerances specified are in accordance with ASME-Y14.5.

FIGURE 2. Plug, rear accessories configurations, class E.

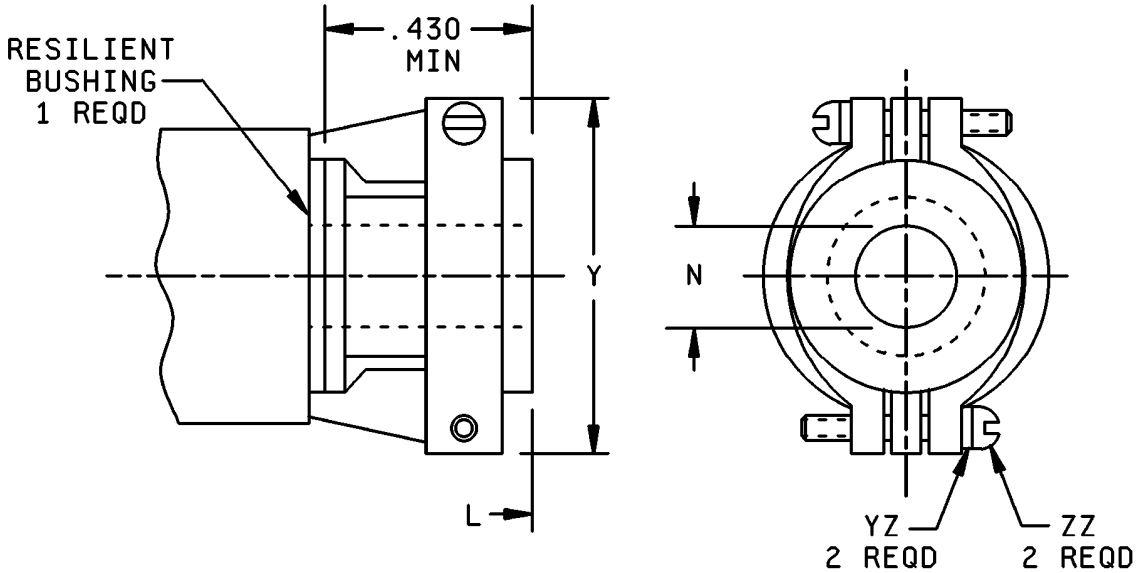

CLASS F, WITH BUSHING

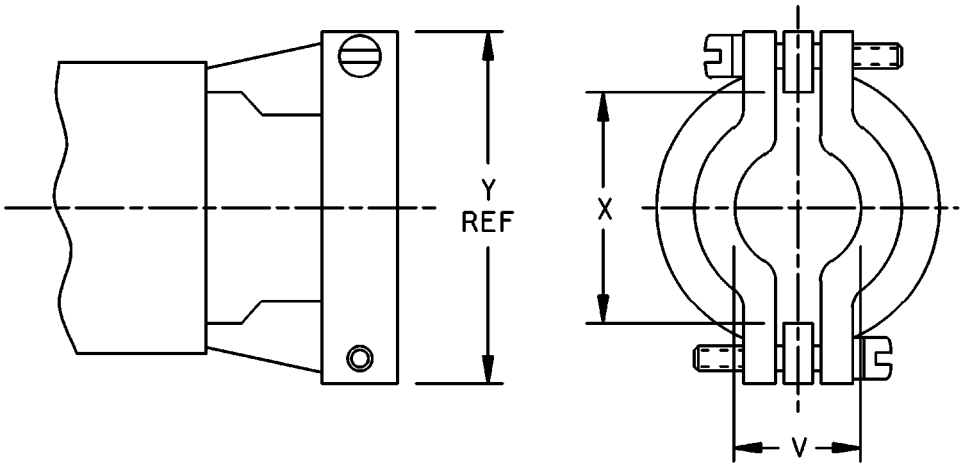

CLASS F, WITH BUSHING REMOVED

FIGURE 3. Plug, rear accessories configurations, class F.

<table>
<tr><th>Shell size</th><th>L max overall length</th><th>Y max</th><th>X dia min open</th><th>V max closed</th><th>N (see note 4) ± .010 free dia</th><th>ZZ screw threads</th><th>YZ (see note 5) lockwashers NASM35338 or NASM35333 types</th></tr>
<tr><td>8</td><td rowspan="4">1.906 (48.41)</td><td>.828 (21.03)</td><td>.234 (5.94)</td><td rowspan="2">.187 (4.75)</td><td>.125 (3.18)</td><td rowspan="5">6-32 UNC</td><td rowspan="5">NASM35338 - 98 or -41

NASM35333 -105 or -37</td></tr>
<tr><td>10</td><td>.891 (22.63)</td><td>.297 (7.54)</td><td>.188 (4.78)</td></tr>
<tr><td>12</td><td>1.016 (25.81)</td><td>.422 (10.72)</td><td>.281 (7.14)</td><td>.312 (7.92)</td></tr>
<tr><td>14</td><td>1.141 (28.98)</td><td>.547 (13.89)</td><td>.325 (8.26)</td><td>.375 (9.53)</td></tr>
<tr><td>16</td><td>2.047 (51.99)</td><td>1.203 (30.56)</td><td>.609 (15.47)</td><td>.356 (9.04)</td><td>.500 (12.70)</td></tr>
<tr><td>18</td><td>2.078 (52.78)</td><td rowspan="2">1.469 (37.31)</td><td rowspan="2">.734 (18.64)</td><td>.456 (11.58)</td><td rowspan="2">.625 (15.88)</td><td rowspan="4">8-32 UNC</td><td rowspan="4">NASM35338 -B8L or -8L -99 or -42

NASM35333 -106 or -38</td></tr>
<tr><td>20</td><td rowspan="2">2.250 (57.15)</td><td rowspan="2">.519 (13.18)</td></tr>
<tr><td>22</td><td>1.656 (42.06)</td><td>.922 (23.42)</td><td>.750 (19.05)</td></tr>
<tr><td>24</td><td>2.312 (58.72)</td><td>1.750 (44.45)</td><td>.984 (24.99)</td><td>.657 (16.69)</td><td>.800 (20.32)</td></tr>
</table>

NOTES:
1. Dimensions are in inches.
2. Metric equivalents are in given for information only.
3. True position (TP) tolerances specified are in accordance with ASME-Y14.5.
4. Use SAE-AS85049/139 bushing if reduced opening is required.
5. For class F: Lockwashers may be captivated.

FIGURE 3. Plug, rear accessories configurations, class F - Continued.

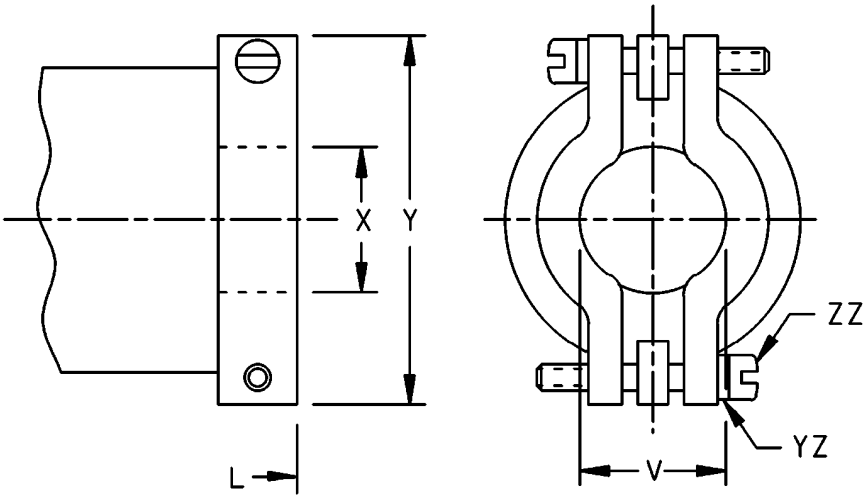

Shell size	L max overall length	V max closed	X ID gland seal min range		Y dia max	ZZ screw threads	YZ (see note 4) Lockwashers NASM35338 or NASM35333 types
			closed	open			
8	2.271 (57.68)	.187 (4.75)	.169 (4.29)	.230 (5.84)	.828 (21.03)	6-32 UNC	NASM35338 - 98 or -41 NASM35333 -105 or -37
10			.205 (5.21)	.312 (7.92)	.891 (22.63)		
12	2.411 (61.24)	.281 (7.14)	.338 (8.59)	.442 (11.23)	1.016 (25.81)		
14	2.599 (66.01)	.325 (8.26)	.416 (10.57)	.539 (13.69)	1.161 (29.49)		
16	2.943 (74.75)	.356 (9.04)	.550 (13.97)	.616 (15.65)	1.203 (30.56)		
18	3.172 (80.57)	.456 (11.58)	.600 (15.24)	.672 (17.07)	1.469 (37.31)	8-32 UNC	NASM35338 -B8L or -8L -99 or -42 NASM35333 -106 or -38
20	3.610 (91.69)	.519 (13.18)	.635 (16.13)	.747 (18.97)			
22	3.766 (95.66)		.670 (17.02)	.846 (21.49)	1.656 (42.06)		
24	3.985 (101.22)	.657 (16.69)	.740 (18.79)	.894 (22.71)	1.750 (44.45)		

NOTES:

1. Dimensions are in inches.
2. Metric equivalents are given for information only.
3. True position (TP) tolerances specified are in accordance with ASME-Y14.5.
4. Lockwashers may be captivated.

FIGURE 4. Plug, rear accessories configurations, class J.

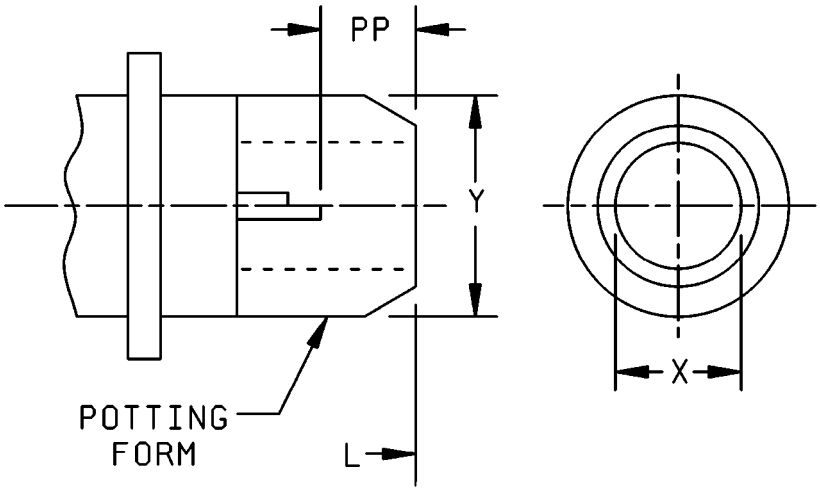

Shell size	L max overall length	X dia min ID	Y dia max OD	PP min
8	1.500 (38.10)	.317 (8.05)	.608 (15.44)	.250 (6.35)
10		.434 (11.02)	.734 (18.64)	
12		.548 (13.92)	.858 (21.79)	
14		.673 (17.09)	.984 (24.99)	
16		.798 (20.27)	1.110 (28.19)	
18		.899 (22.83)	1.234 (31.34)	
20	1.609 (40.87)	1.024 (26.01)	1.360 (34.54)	
22		1.149 (29.18)	1.484 (37.69)	
24	1.687 (42.85)	1.274 (32.36)	1.610 (40.89)	

NOTES:
1. Dimensions are in inches.
2. Metric equivalents are given for information only.
3. True position (TP) tolerances specified are in accordance with ASME-Y14.5.

FIGURE 5. Plug, rear accessories configurations, class P.

REQUIREMENTS:

Dimensions and configurations: See figures 1 through 5.

Connector mating: This connector mates with MS3110, MS3112, MS3113, MS3114 and MS3119.

For insert arrangement: See MIL-STD-1669.

Intermateability dimensions are in accordance with MIL-DTL-26482.

Finishes: A finish designator shall not be included in the PIN when finish W is required. See MIL-DTL-26482 for other finishes, including D, T and K, available for classes E, F, P and J.

Part or Identifying Number (PIN) example:

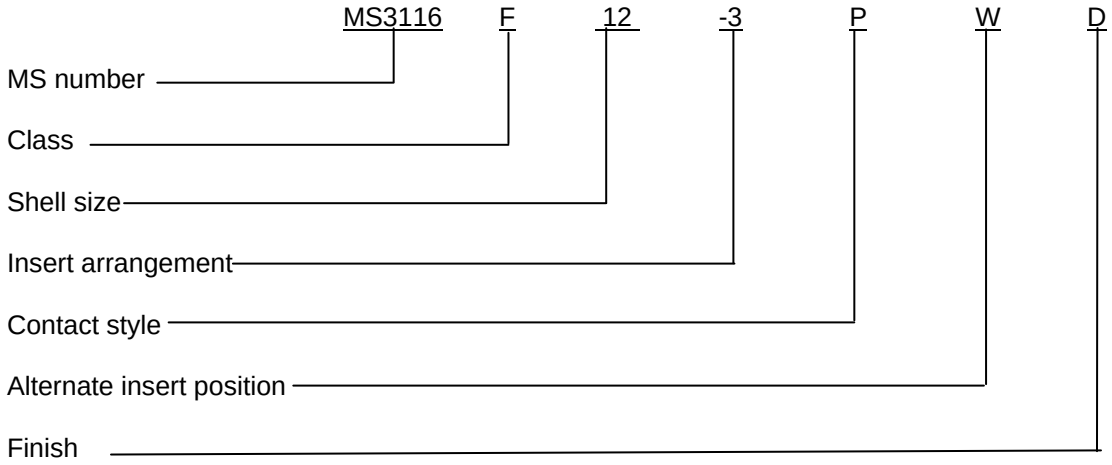

Note: When finish W is required, no finish designator is used (class W is the default finish).

Restrictions:

Not for Air Force use. For Air Force use, use MS3476.

Changes from previous issue. Marginal notations are not used in this revision to identify changes with respect to the previous issue due to the extent of the changes.

Referenced documents. In addition to MIL-DTL-26482, this document references the following:

MIL-STD-1669
ASME-Y14.5
SAE-AS85049/139

CONCLUDING MATERIAL

Custodians:
Army - CR
Navy - AS
Air Force - 85
DLA - CC

Review activities:
Army - AV
Navy - EC, SH
Air Force - 99

Preparing activity:
DLA - CC

(Project 5935-2012-225)

NOTE: The activities listed above were interested in this document as of the date of this document. Since organizations and responsibilities can change, you should verify the currency of the information above using the ASSIST Online database at https://assist.dla.mil.