INCH-POUND

MS3110F
w/AMENDMENT 1
30 August 2013
SUPERSEDING
MS3110F
29 April 2009

DETAIL SPECIFICATION SHEET

CONNECTORS, RECEPTACLE, ELECTRICAL, SOLDER TYPE, WALL MOUNTING, BAYONET COUPLING, SERIES 1, CLASSES E, F, J AND P

Inactive for new design after 15 December 1998.
For new design, use MS3470.

This specification is approved for use by all Departments and Agencies of the Department of Defense.

The requirements for acquiring the product described herein shall consist of this specification sheet and MIL-DTL-26482.

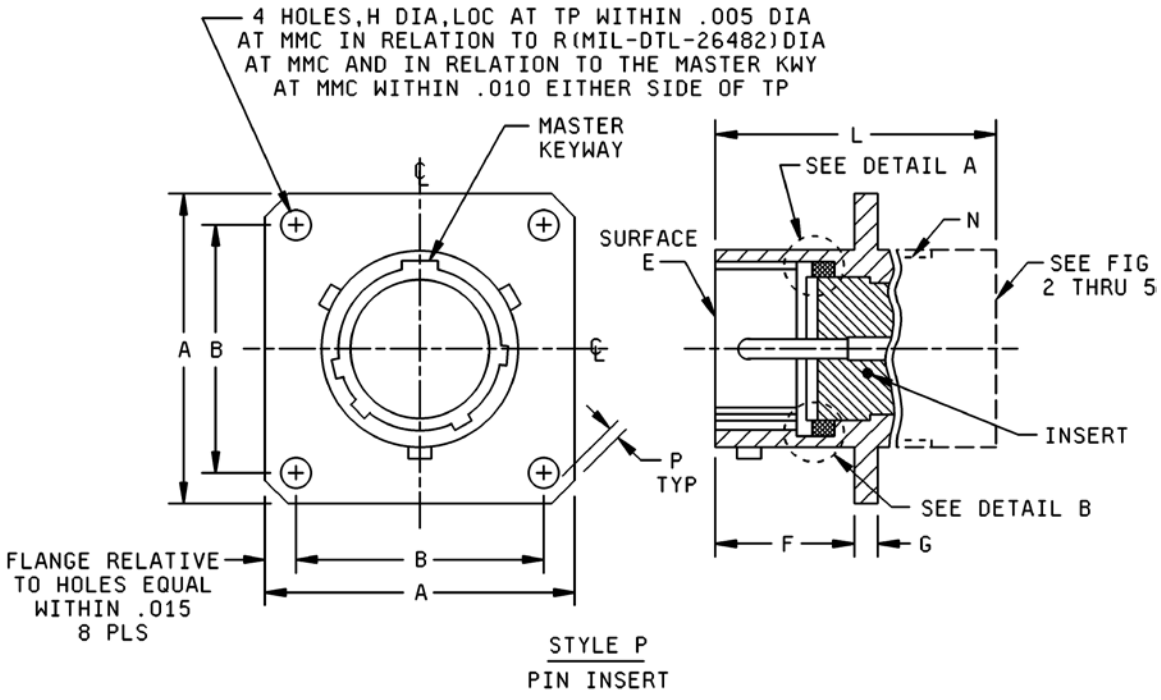

FIGURE 1. Receptacle, classes E, F, J, and P.

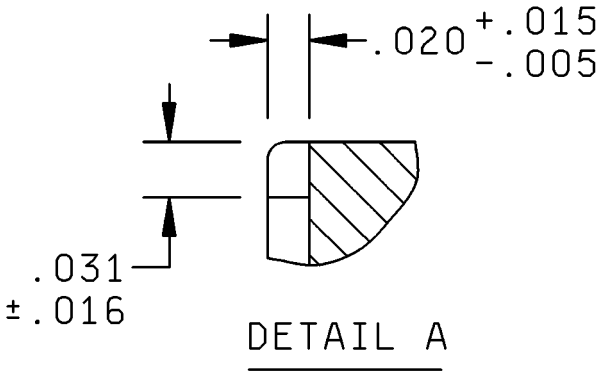

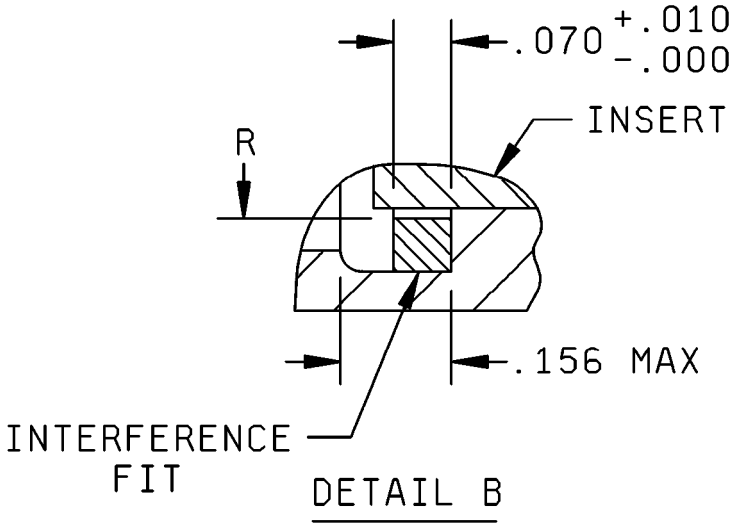

FIGURE 1. Receptacle, classes E, F, J and P - Continued.

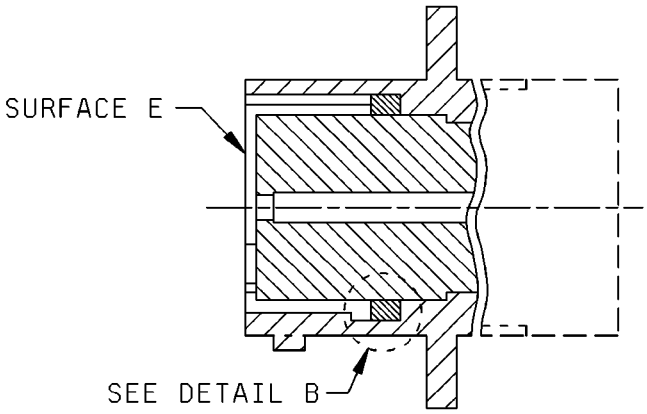

STYLE S
SOCKET INSERT

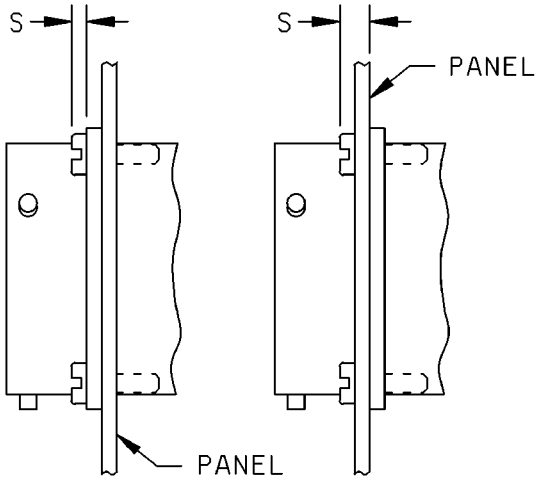

FRONT PANEL
MTG REF

REAR PANEL
MTG REF

FIGURE 1. Receptacle, classes E, F, J and P - Continued.

<table>
<tr><th>Shell size</th><th>A
max length</th><th>B
(TP)
mounting holes</th><th>F
+ .031, - .000
mounting flange location</th><th>G
± .016
thick mounting flange</th><th>H ± .005
dia
mounting holes</th></tr>
<tr><td>8</td><td>.828
(21.03)</td><td>.594
(15.08)</td><td rowspan="6">.431
(10.95)</td><td rowspan="6">.062
(1.57)</td><td rowspan="8">.120
(3.05)</td></tr>
<tr><td>10</td><td>.954
(24.23)</td><td>.719
(18.26)</td></tr>
<tr><td>12</td><td>1.047
(26.60)</td><td>.812
(20.62)</td></tr>
<tr><td>14</td><td>1.141
(28.98)</td><td>.906
(23.01)</td></tr>
<tr><td>16</td><td>1.234
(31.34)</td><td>.969
(24.61)</td></tr>
<tr><td>18</td><td>1.328
(33.73)</td><td>1.062
(26.97)</td></tr>
<tr><td>20</td><td>1.453
(36.90)</td><td>1.158
(29.41)</td><td rowspan="2">.556
(14.12)</td><td rowspan="3">.094
(2.38)</td></tr>
<tr><td>22</td><td>1.578
(40.08)</td><td>1.250
(31.75)</td></tr>
<tr><td>24</td><td>1.700
(43.18)</td><td>1.375
(34.92)</td><td>.589
(14.96)</td><td>.147
(3.73)</td></tr>
</table>

FIGURE 1. Receptacle, classes E, F, J, and P - Continued.

Shell size	N UNEF-2A accessory thread	P min edge distance	R max ID gasket	S max
8	.4375-28	.035 (0.89)	.329 (8.35)	.087 (2.21)
10	.5625-24		.457 (11.60)	
12	.6875-24		.564 (14.32)	
14	.8125-20		.689 (17.50)	
16	.9375-20		.814 (20.67)	
18	1.0625-18		.907 (23.04)	
20	1.1875-18	.050 (1.27)	1.039 (26.39)	.212 (5.38)
22	1.3125-18		1.164 (29.56)	
24	1.4375-18		1.289 (32.74)	

Inches	mm	Inches	mm
.005	0.13	.020	0.51
.010	0.25	.031	0.79
.015	0.38	.070	1.78
.016	0.41	.156	3.96

NOTES:
1. Dimensions are in inches.
2. Metric equivalents are given for information only.
3. True position (TP) tolerances specified are in accordance with ASME Y14.5.

FIGURE 1. Receptacle, classes E, F, J and P - Continued.

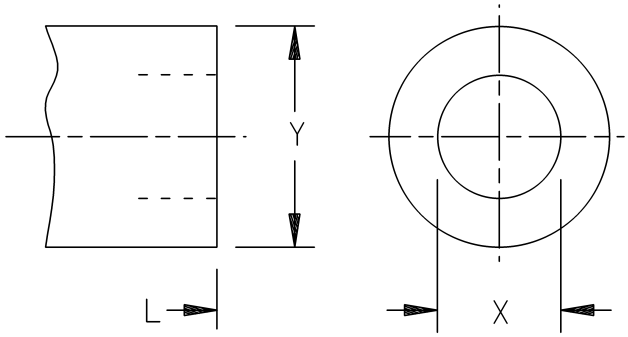

Shell size	L max overall length	X dia min ID	Y dia max OD
8	1.328 (33.73)	.259 (6.58)	.608 (15.44)
10		.359 (9.12)	.734 (18.64)
12		.469 (11.91)	.858 (21.79)
14		.589 (14.96)	.984 (24.99)
16		.727 (18.47)	1.110 (28.19)
18		.779 (19.79)	1.234 (31.34)
20	1.531 (38.89)	.901 (22.89)	1.360 (34.54)
22		1.009 (25.63)	1.484 (37.69)
24	1.594 (40.49)	1.123 (28.52)	1.610 (40.89)

NOTES:
1. Dimensions are in inches.
2. Metric equivalents are given for information only.
3. True position (TP) tolerances specified are in accordance with ASME Y14.5.

FIGURE 2. Receptacle, rear accessory configurations, class E.

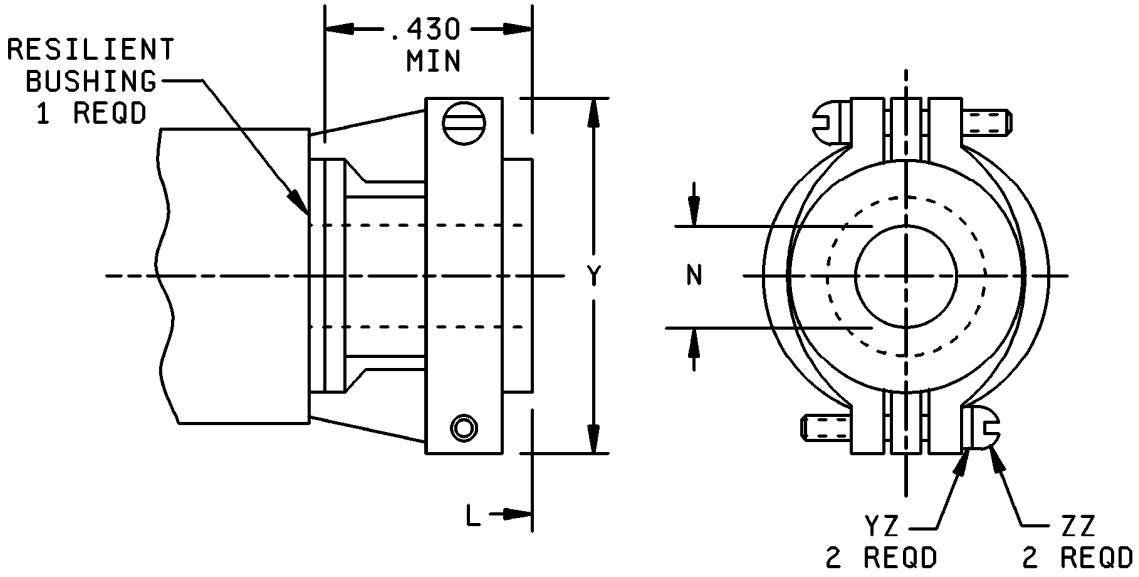

CLASS F, WITH BUSHING

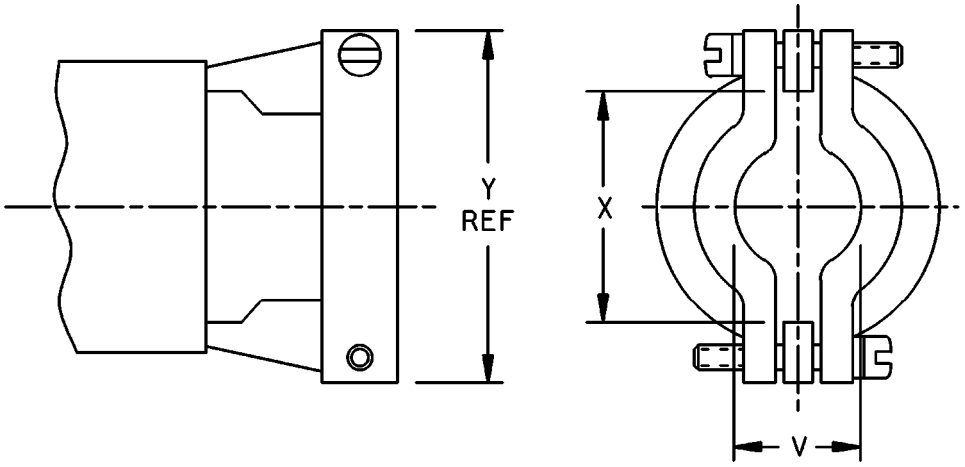

CLASS F, WITH BUSHING REMOVED

FIGURE 3. Receptacle, rear accessory configurations, class F.

Shell size	L max overall length	Y max	X dia min open	V max closed	N (see note 4) ± .010 free dia	ZZ screw threads	YZ (see note 5) Lockwashers NASM35338 or NASM35333 types
8	1.922 (48.82)	.828 (21.03)	.234 (5.94)	.157 (3.99)	.125 (3.18)	6-32 UNC	NASM35338 - 98 or -41 NASM35333 -105 or -37
10		.891 (22.63)	.297 (7.54)	.187 (4.75)	.188 (4.78)		
12		1.016 (25.81)	.422 (10.72)	.281 (7.14)	.312 (7.92)		
14		1.161 (29.49)	.547 (13.89)	.325 (8.26)	.375 (9.53)		
16	2.047 (51.99)	1.203 (30.56)	.609 (15.47)	.356 (9.04)	.500 (12.70)		
18	2.078 (52.78)	1.469 (37.31)	.734 (18.64)	.456 (11.58)	.625 (15.88)	8-32 UNC	NASM35338 -B8L or -8L -99 or -42 NASM35333 -106 or -38
20	2.344 (59.54)			.519 (13.18)	.625 (15.88)		
22		1.656 (42.06)	.922 (23.42)	.519 (13.18)	.750 (19.05)		
24	2.406 (61.11)	1.750 (44.45)	.984 (24.99)	.657 (16.69)	.800 (20.32)		

NOTES:
1. Dimensions are in inches.
2. Metric equivalents are in given for information only.
3. True position (TP) tolerances specified are in accordance with ASME Y14.5.
4. Use SAE-AS85049/139 bushing if reduced opening is required.
5. For class F: Lockwashers may be captivated.

FIGURE 3. Receptacle, rear accessory configurations, class F - Continued.

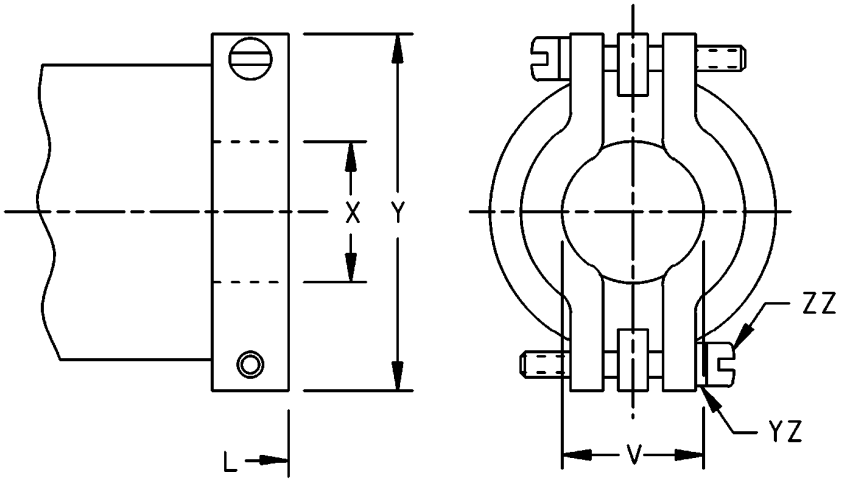

Shell size	L max overall length	V max closed	X ID gland seal min range		Y dia max	ZZ screw threads	YZ (see note 4) Lockwashers NASM35338 or NASM35333 types
			closed	open			
8	2.271 (57.68)	.157 (3.99)	.169 (4.29)	.230 (5.84)	.828 (21.03)	6-32 UNC	NASM35338 - 98 or -41 NASM35333 -105 or -37
10		.187 (4.75)	.205 (5.21)	.312 (7.92)	.891 (22.63)		
12	2.411 (61.24)	.281 (7.14)	.338 (8.59)	.442 (11.23)	1.016 (25.81)		
14	2.599 (66.01)	.325 (8.26)	.416 (10.57)	.539 (13.69)	1.161 (29.49)		
16	2.943 (74.75)	.356 (9.04)	.550 (13.97)	.616 (15.65)	1.203 (30.56)		
18	3.172 (80.57)	.456 (11.58)	.600 (15.24)	.672 (17.07)	1.469 (37.31)	8-32 UNC	NASM35338 -B8L or -8L -99 or -42 NASM35333 -106 or -38
20	3.610 (91.69)	.519 (13.18)	.635 (16.13)	.747 (18.97)			
22	3.766 (95.66)		.670 (17.02)	.846 (21.49)	1.656 (42.06)		
24	3.985 (101.22)	.657 (16.69)	.760 (19.30)	.854 (21.69)	1.750 (44.45)		

NOTES:
1. Dimensions are in inches.
2. Metric equivalents are given for information only.
3. True position (TP) tolerances specified are in accordance with ASME Y14.5.
4. Lockwashers may be captivated.

FIGURE 4. Receptacle, rear accessory configurations, class J.

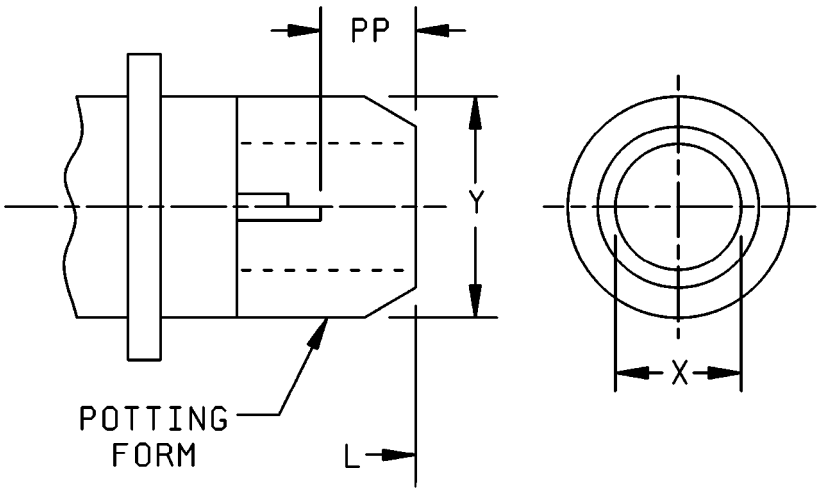

Shell size	L max overall length	X dia min	Y dia max	PP min
8	1.453 (36.91)	.317 (8.05)	.608 (15.44)	.250 (6.35)
10		.434 (11.02)	.734 (18.64)	
12		.548 (13.92)	.858 (21.79)	
14		.673 (17.09)	.984 (24.99)	
16		.798 (20.27)	1.110 (28.19)	
18		.899 (22.83)	1.234 (31.34)	
20	1.672 (42.47)	1.024 (26.01)	1.360 (34.54)	
22		1.149 (29.18)	1.484 (37.69)	
24	1.734 (44.04)	1.274 (32.36)	1.610 (40.89)	

NOTES:
1. Dimensions are in inches.
2. Metric equivalents are given for information only.
3. True position (TP) tolerances specified are in accordance with ASME Y14.5.

FIGURE 5. Receptacle, rear accessory configurations, class P.

REQUIREMENTS:

Dimensions and configurations: See figures 1 through 5.

Connector mating: This connector mates with MS3111, MS3116, MS3121 and MS3126.

For insert arrangement: See MIL-STD-1669.

Intermateability dimensions are in accordance with MIL-DTL-26482.

Finishes: A finish designator shall not be included in the PIN when finish W is required. See MIL-DTL-26482 for other finishes, including D, T and K, available for classes E, F, P and J.

Part or Identifying Number (PIN) example:

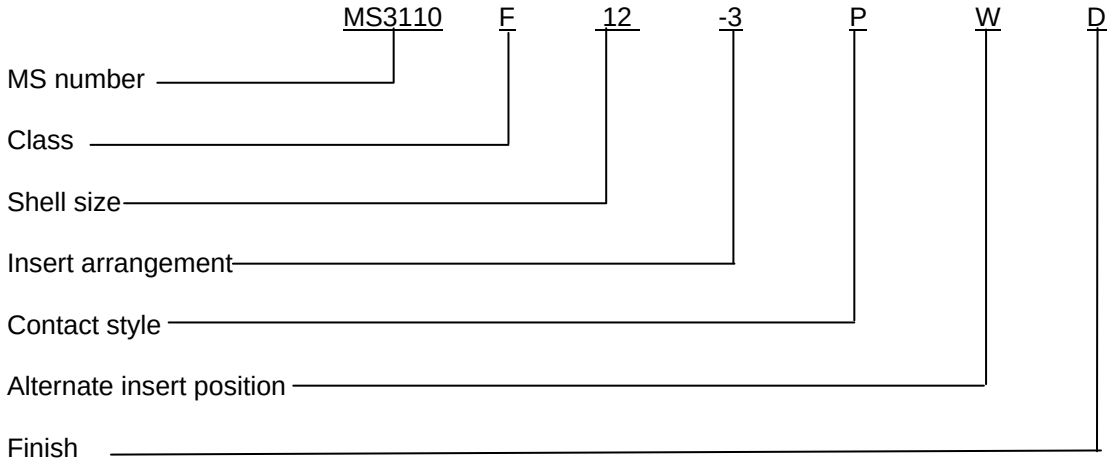

Note: When finish W is required, no finish designator is used (class W is the default finish).

Amendment Notations. The margins of this specification are marked with vertical lines to indicate modifications generated by this amendment. This was done as a convenience only and the Government assumes no liability whatsoever for any inaccuracies in these notations. Bidders and contractors are cautioned to evaluate the requirements of this document based on the entire content irrespective of the marginal notations.

Referenced documents. In addition to MIL-DTL-26482, this document references the following:

MS3111
MS3116
MS3121
MS3126
MIL-STD-1669
ASME Y14.5
NASM35333
NASM35338
SAE-AS85049/139

CONCLUDING MATERIAL

Custodians:
Army - CR
Navy - AS
Air Force - 85
DLA - CC

Review activities:
Army - AV
Navy - EC, SH
Air Force - 99

Preparing activity:
DLA - CC

(Project 5935-2013-162)

NOTE: The activities listed above were interested in this document as of the date of this document. Since organizations and responsibilities can change, you should verify the currency of the information above using the ASSIST Online database at https://assist.dla.mil.