INCH-POUND

MIL-DTL-25677/3A
w/AMENDMENT 1
4 November 2004
SUPERSEDING
MIL-DTL-25677/3A
24 June 2002

DETAIL SPECIFICATION SHEET

NOZZLE, PRESSURE LUBRICATING OIL SERVICING, LOCKING

This specification is approved for use by all
Departments and Agencies of the Department of Defense.

The requirements for acquiring the product described herein shall consist of this specification sheet and MIL-DTL-25677.

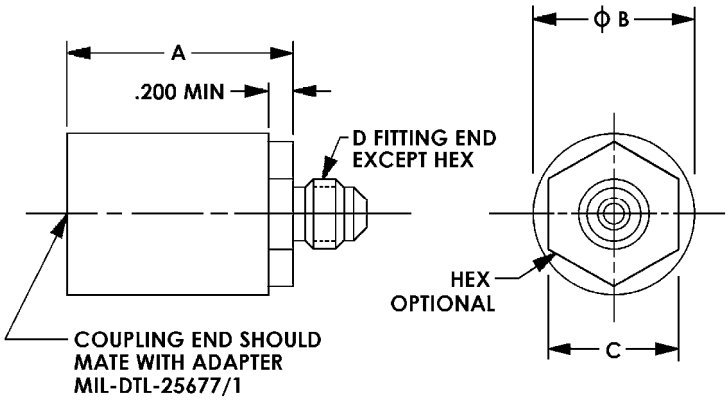

NOTES:

1. Dimensions are in inches. Unless otherwise specified, tolerances: decimals ±.010.
2. The MS24475 Part or Identifying Number (PIN) have been retained.
3. International standardization agreement implementation. This specification implements STANAG 3595 ED.4(2), "AIRCRAFT FITTING FOR PRESSURE REPLENISHMENT OF GAS TURBINE ENGINES WITH OIL". When amendment, revision, or cancellation of this specification is proposed, the preparing activity must coordinate the action with the U.S. National Point of Contact for the international standardization agreement, as identified in the ASSIST database at http://assist.daps.dla.mil.
4. For design feature purposes, this specification sheet takes precedence over the procurement document referenced herein.
5. Unless otherwise specified, the outline drawing represents the max envelope of the nozzle with the dust cover removed.

FIGURE 1. Nozzle.

TABLE I. Dimensions, flow rate, and pressure drop.

PIN	A max	B max	C min	D style E	Used with adapter	Min flow-rate with -45°F oil GPM	Max pressure drop PSI
MS24475-1	2.75	2.00	1.125	AS4395-10	MS24476-1	1.0	20
MS24475-2	3.50	2.50	1.375	AS4395-12	MS24476-2	1.0	25

REQUIREMENTS

The nozzle is designed for use with synthetic lubricating and preservative oil.

The nozzle shall be in accordance with figure 1 and table I.

Material and finish: See MIL-DTL-25677.

The “C” dimension shall fit standard wrench openings.

Remove burrs and break sharp edges .016 maximum.

Coupling end shall mate with adapter MIL-DTL-25677/1.

PIN example:

MS24475 - 1

Size

MS prefix

The margins of this specification are marked with vertical lines to indicate modifications generated by this amendment. This was done as a convenience only and the Government assumes no liability whatsoever for any inaccuracies in these notations. Bidders and contractors are cautioned to evaluate the requirements of this document based on the entire content irrespective of the marginal notations.

Referenced documents. In addition to MIL-DTL-25677, this document references the following:

MIL-DTL-25677/1
STANAG 3595 ED.4(2)

CONCLUDING MATERIAL

Custodians:
Navy - AS
Air Force - 99
DLA - CC

Preparing activity:
DLA - CC

(Project 4730-2632-000)

Review activities:
Navy - MC, SA, CG
Air Force - 06, 71

NOTE: The activities listed above were interested in this document as of the date of this document. Since organizations and responsibilities can change, you should verify the currency of the information above using the ASSIST Online database at http://assist.daps.dla.mil.