INCH-POUND

MIL-DTL-25516F
4 November 2004
SUPERSEDING
MIL-DTL-25516E
22 August 2000

DETAIL SPECIFICATION

CONNECTORS, ELECTRICAL, MINIATURE, COAXIAL, ENVIRONMENT RESISTANT TYPE, GENERAL SPECIFICATION FOR

This specification is approved for use by all Departments
and Agencies of the Department of Defense.

1. SCOPE

1.1 Scope. This specification covers a series of miniature, moisture proof connectors suitable for operation with shielded and unshielded cable up to 750 volts rms under severe environmental conditions.

1.2 Classification. Connectors covered by this specification will be of the following series, classes, and types, as specified (see 3.1).

Series I	-	Plugs and receptacles, cable termination.
Series II	-	Plugs and receptacles, permanent crimp, (using a standard MIL-DTL-22520 tool).
Series III	-	Adapters, all types.
Series IV	-	Plugs and receptacles, solder termination.
Class G	-	General purpose.
Class H	-	Hermetic, sealed cable termination.
Class Y	-	Hermetic, adapters.
Type 1	-	Shield termination, continuous circuit, grounded.
Type 2	-	Shield termination, continuous circuit, isolated ground.
Type 3	-	Shield termination, interrupted ground.
Type 4	-	No shield termination.
Type 5	-	Class Y, grounded outer circuit.
Type 6	-	Class Y, ungrounded outer circuit.

Comments, suggestions, or questions on this document should be addressed to: Commander, Defense Supply Center Columbus, Attn: VAI, P.O. Box 3990, Columbus, Ohio 43218-3990 or emailed to RFConnectors@dscc.dla.mil. Since contact information can change, you may want to verify the currency of this address information using the ASSIST Online database at http://assist.daps.dla.mil.

AMSC N/A FSC 5935

1.2.1 Part or Identifying Number (PIN). The military PIN will consist of the letter “M” followed by the basic specification sheet number and a sequentially assigned dash number which is used to designate the polarity and a letter to designate the cable size as shown in the following example:

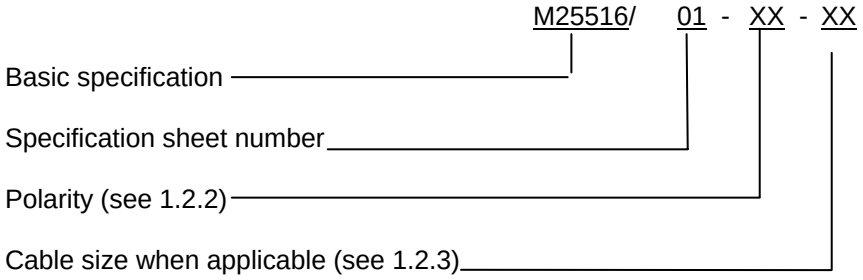

1.2.2 Polarity. The mating interface of connectors covered by this specification should be polarized as specified on figure 1 (see 3.1). Where connector configuration includes minor variables such as mounting features, solder terminations, etc. The first digit in the polarity dash number may be changed to show the variation. Dash number for polarities should be as specified in table I.

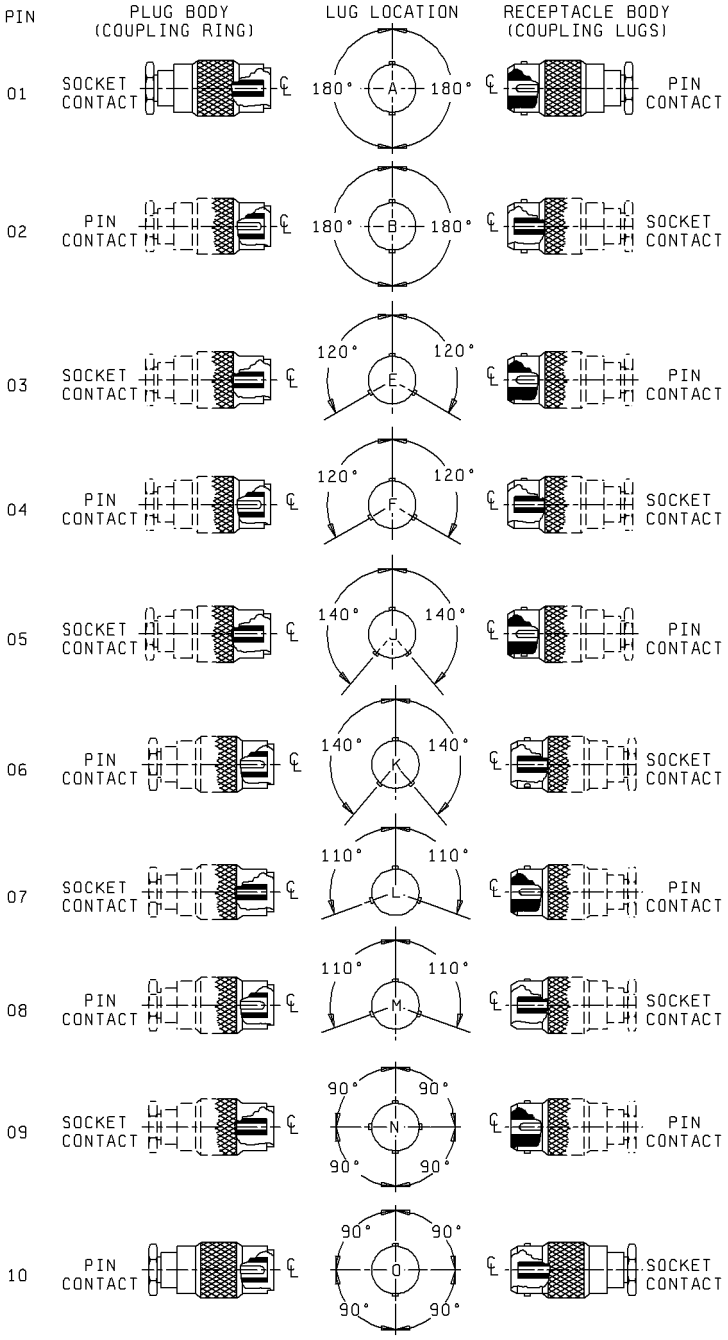

Slot in coupling rings mate with receptacle lugs

Receptacles (not shown) have coupling lugs

PIN 01, 02, 09 and 10 are inactive for new design. Support for existing designs maintained.

FIGURE 1. Polarity chart.

TABLE I. Polarities.

Dash number	Polarity	Uses
03	E	Basic configuration of each slash sheet
04	F	
05	J	
06	K	
07	L	
08	M	
13	E	Use for configuration variations
14	F	
etc.	etc.	

1.2.3 Cable size. Connectors covered by this specification will be capable of terminating cables in accordance with appendix A, when applicable (see 3.1).

2. APPLICABLE DOCUMENTS

2.1 General. The documents listed in this section are specified in sections 3, 4, or 5 of this specification. This section does not include documents cited in other sections of this specification or recommended for additional information or as examples. While every effort has been made to ensure the completeness of this list, document users are cautioned that they must meet all specified requirements of documents cited in sections 3, 4, or 5 of this specification, whether or not they are listed.

2.2 Government documents.

2.2.1 Specifications, standards, and handbooks. The following specifications, standards, and handbooks form a part of this document to the extent specified herein. Unless otherwise specified, the issues of these documents are those cited in the solicitation or contract.

FEDERAL SPECIFICATIONS

O-F-499 - Flux, Brazing, (Silver Brazing Filler Metal, Low Melting Point)

FEDERAL STANDARDS

FED-STD-H28 - Screw-Thread Standards for Federal Services

COMMERICAL ITEM DESCRIPTIONS (CID)

A-A-52557 - Fuel Oil, Diesel; for Posts, Camps and Stations

DEPARTMENT OF DEFENSE SPECIFICATIONS

MIL-PRF-5606 - Hydraulic Fluid, Petroleum Base; Aircraft, Missile, and Ordnance
MIL-DTL-5624 - Turbine Fuel, Aviation, Grades JP-4 and JP-5
MIL-PRF-6081 - Lubricating Oil, Jet Engine
MIL-PRF-7808 - Lubricating Oil, Aircraft Turbine Engine, Synthetic Base
MIL-DTL-22520 - Crimping Tools, Wire Termination, General Specification For

(See supplement 1 for applicable specification sheets.)

DEPARTMENT OF DEFENSE STANDARDS

MIL-STD-130	-	Identification Marking of U.S. Military Property
MIL-STD-348	-	Radio Frequency Connector Interfaces for MIL-C-3643, MIL-C-3650, MIL-C-3655, MIL-C-25516, MIL-C-26637, MIL-PRF-39012, MIL-PRF-49142, MIL-PRF-49142, MIL-PRF-55339, MIL-C-83517
MIL-STD-810	-	Environmental Engineering Considerations and Laboratory Tests
MIL-STD-889	-	Dissimilar Metals

(Copies of these documents are available online at http://assist,daps.dla.mil/quickseach/ or http://assist,daps.dla.mil or from the Standardization Document Order Desk, 700 Robbins Avenue, Building 4D, Philadelphia, PA 19111-5094.)

2.3 Non-Government publications. The following documents form a part of this document to the extent specified herein. Unless otherwise specified, the issues of these documents are those cited in the solicitation or contract.

ASTM INTERNATIONAL

ASTM A108	-	Steel Bars, Carbon, Cold Finished, Standard Quality
ASTM A484	-	Steel, Bars, Billets and Forgings, Stainless
ASTM B16	-	Ros, Brass, Free-Cutting, Bar and Shapes for Use in Screw Machines
ASTM B488	-	Gold for Engineering Uses Electrodeposited Coating Of
ASTM B36	-	Plate Brass, Sheet, Strip, and Rolled Bar
ASTM B121	-	Plate, Lead Brass, Sheet, Strip and Rolled Bar
ASTM B124	-	Copper and Copper Alloy Forging Rod, Bar and Shapes
ASTM B194	-	Copper-Beryllium, Alloy Plate, Sheet, Strip, and Rolled Bar
ASTM B196	-	Copper Beryllium Alloy Rod and Bar
ASTM B197	-	Wire, Alloy Copper-Beryllium
ASTM B700	-	Electrodeposited Coatings of Silver for Engineering Uses
ASTM D471	-	Rubber Property-Effect of Liquids
ASTM D910	-	Gasoline, Aviation
ASTM G21	-	Materials to Fungi, Sythetic Polymeric, Determining Resistance Of

(Copies of these documents are available from http://www.astm.org or ASTM International, P.O. Box C700, 100 Barr Harbor Drive, West Conshohocken, PA 19428-2959.)

ELECTRONIC INDUSTRIES ALLIANCE (EIA)

EIA 364	-	Electrical Connector/Socket Test Procedures Including Environmental Classifications

(Copies of these documents are available online at http://www.eia.org from the Electronic Industries Alliance, Technology Strategy & Standards Department, 2500 Wilson Boulevard, Arlington, VA 22201.)

IPC – ASSOCATION CONNECTING ELECTRONIC INDUSTRIES (IPC)

J-STD-006	-	Electronic Grade Solder Alloys and Fluxed and Non-Fluxed Solid Solders for Electronic Soldering Applications Requirements For

(Copies of these documents are available online from http://www.ipc.org or from the IPC-Association Connecting Electronics Industry, 3000 Lakeside Drive, Suite 309S, Bannockburn, IL 60015-1249.)

SOCIETY OF AUTOMOTIVE ENGINEERS (SAE)

SAE AS31971	-	Pin, Gage for Socket Contact Engagement Test
SAE-AMS-QQ-N-290	-	Nickel Plating (Electrodeposited)

(Copies of these documents are available online from http://www.sae.org or from the Society of Automotive Engineers, 400 Commonwealth Drive, Warrandale, PA 15096-0001.)

2.4 Order of precedence. In the event of a conflict between the text of this document and the references cited herein (except for related specification sheets), the text of this document takes precedence. Nothing in this document, however, supersedes applicable laws and regulations unless a specific exemption has been obtained.

3. REQUIREMENTS

3.1 Specification sheets. The individual item requirements shall be as specified herein and in accordance with the applicable specification sheets. In the event of any conflict between the requirements of this specification and the specification sheet, the latter shall govern.

3.2 Classification of requirements. The requirements for the connectors are classified herein as follows:

Requirement	Paragraph
Qualification	3.3
Materials	3.4
Design and construction	3.5
Performance	3.6

3.3 Qualification. Connectors furnished under this specification shall be products that are authorized by the qualifying activity for listing on the applicable qualified product list before contract award (see 4.5 and 6.3).

3.4 Materials. Materials shall be as specified herein. However, when a definite material is not specified, a material shall be used which will enable the connectors to meet the performance requirements of this specification and the applicable specification sheet. Acceptance or approval of any constituent material shall not be construed as a guaranty of acceptance of the finished products.

3.4.1 Dissimilar metals. Dissimilar metals are defined in MIL-STD-889. Unless suitably protected against galvanic corrosion by a compatible interposing metal, dissimilar metals shall not be used in intimate contact with each other.

3.4.2 Metal parts. Unless otherwise specified, metals parts, except spring members and hermetically sealed assemblies shall be a suitable copper alloy such as brass, in accordance with ASTM B16, ASTM B36, ASTM B121, and ASTM B124.

3.4.2.1 Spring members. Signal carrying spring members shall be manufactured of beryllium copper in accordance with ASTM B194, ASTM B196, and ASTM B197. Non-signal carrying spring member shall be manufactured of stainless steel in accordance with ASTM A484, or beryllium copper in accordance with ASTM B194, ASTM B196, and ASTM B197.

3.4.2.2 Hermetically sealed assemblies. Hermetically sealed assemblies are to be manufactured of steel in accordance with ASTM A108, or stainless steel in accordance with ASTM A484. Hermetically sealed assemblies may also be manufactured in a suitable sleeve before soldering into a copper alloy shell. Pin contacts may be of a ferrous alloy.

3.4.3 Plating.

3.4.3.1 Center contacts. The male pin shall be plated to a minimum gold thickness of 50 micro inches (1.27μm) in accordance with ASTM B488, type II, code C, class 1.27, over 50 micro inches (1.27μm) minimum of nickel in accordance with SAE-AMS-QQ-N-290, class 1, measured anywhere along the mating surface, for all series. The socket contact shall be plated to a minimum of 50 micro inches (1.27 μm) of gold in accordance with ASTM B488, type II, code C, class 1.27, over 50 micro inches (1.27 μm) minimum of nickel in accordance with SAE-AMS-QQ-N-290, class 1, including the I.D., measured at a depth of .040 inch minimum. The plating on non-significant surfaces in the I.D. shall be of sufficient thickness to ensure plating continuity and uniform utility and protection. This plating may consist of an underplate only. A silver underplate shall not be permitted.

3.4.3.2 Shield clamp. Metal shield clamping mechanisms shall be .0001 inch minimum silver in accordance with ASTM B700, type II, grade A. A suitable underplate may be used.

3.4.3.3 Outer contact (shell). Outer contacts of all types, shall be .000050 (1.27μm) inch minimum gold in accordance with ASTM B488, type 3, grade C, class 1.27, over a suitable underplate, except silver which shall not be used.

3.4.4 Insulating materials. Insulating materials shall be suitable for the purpose intended.

3.4.5 Fungus-inert materials. Materials which are not nutrients for fungus shall be used as specified in method 508.5 of MIL-STD-810 or ASTM G21.

3.4.6 Solder. Soft solder shall be in accordance with J-STD-006.

3.4.7 Flux. Flux, used to facilitate silver soldering, shall be in accordance with O-F-499.

3.5 Design and construction.

3.5.1 General design. The connectors shall be design for use with small radio frequency (RF) coaxial cables or shielded or unshielded wire as shown on the specification sheet (see 3.1). Solder pot of contact shall accommodate conductor sizes AWG 18, and smaller. Outer contact spring members shall be attached to the body for uninterrupted shielding and continuity under vibration conditions. Clamping of the cable shield to the connector body shall be independent of the type of rubber utilized, but shall provide metal-to-metal pressure and continuity. Polarization positions, as shown on figure 1, with mating lugs on the receptacles and matching slots on the plug couplings, shall be provided on the connectors. The retaining nut of the cable clamp shall include a suitable chamfer in the cable entry hole to prevent damage to the cable when exposed to shock and vibration.

3.5.2 Mating dimensions. The connectors shall be designed with mating dimensions in accordance with MIL-STD-348. The plug shall be so designed as to give a .005 (0.13 mm) inch minimum compression to the interface gasket when mated.

3.5.3 Moisture sealing. Moisture sealing shall be accomplished over the cable jacket in the cable entry area of the connector and over the cable primary insulation (core). Sealing shall also be effected in the area where the plug body fits the receptacle.

3.5.4 Contacts. All center contacts shall be of the “captive contact” design to insure electrical continuity without depending upon cable stability.

3.5.4.1 Socket contacts. The entering end of the socket contacts shall be rounded or chamfered to facilitate entrance of the mating contact.

3.5.5 Screw threads. Unless otherwise specified, screw threads shall be in accordance with FED-STD-H28.

3.5.6 Maintenance. The connector shall have a minimum number of parts consistent with reliability. Where practicable, the design shall permit easy assembly, disassembly, location of trouble sources, and maintenance with tools and equipment normally available commercially by service maintenance personnel with a minimum of training. Plugs and receptacles (series II) shall be assembled to cables by military standard hand operated crimp tools.

3.5.7 Interchangeability. All connectors of the same PIN shall be functionally and dimensionally interchangeable.

3.6 Performance.

3.6.1 Insulation resistance for mated connectors. When measured in accordance with 4.7.2, the insulation resistance of mated connectors shall conform to the minimum values in table II.

TABLE II. Insulation resistance in megohms.

Class	Contacts	At ambient	At 200°C	After conditioning
G	Center contact to outer contact	5,000	2,000	200
All	Outer contact to outer shell (triaxial connector)	1,000	400	40
H, Y	Center contact to outer contact (hermetic connector)	5,000	1,000	200

3.6.2 Dielectric withstanding voltage. When tested in accordance with 4.7.3, mated and unmated connectors shall conform to the minimum values specified in table III with no evidence of breakdown. Test potential is between center contact and outer contact. For type 2 and type 6 connectors, an additional potential shall be applied between the outer contact and the outer shell. For type 3 connectors, an additional potential shall be applied between the cable shield and outer contact.

TABLE III. Test voltage ac, rms, 60 cycle.

Altitude	Unmated	Mated	Outer insulator type 2 and 6	Interrupted ground type-3
Sea level	1,500	1,500	1,500	1,500
100,000	125	750	125	750

3.6.3 Contact resistance. When measured as specified in 4.7.4, contact resistance shall not cause the millivolt drop to exceed the values specified in table IV, as applicable.

TABLE IV. Contact resistance.

Class	Type	Circuit	Test current	mV at 25°C	mV at 200°C	mV after conditioning
G	1, 2, 3, 4	Inner	1A	1.6	3.1	2.6
	1, 2	Outer 1/	1A	1.6	3.1	2.6
H	1, 2	Inner	1A	16	32	32
		Outer 1/	1A	1.6	3.2	3.2
Y	5, 6	Inner	1A	3.0	60	60
		Outer	1A	2	4	4

1/ Does not apply for connectors using nonshielded cable.
NOTE: Allowable millivolt drop is doubled in the case of two contacts in series.

3.6.4 Low signal level contact resistance. When tested as specified in 4.7.5, the low signal level contact resistance of each mated contact pair shall not exceed the applicable values specified in table V.

TABLE V. Low signal level contact resistance.

Circuit (class A)	Milliohms maximum	
	Initial	After conditioning
Inner contact	9	11
Outer contact	5	6

3.6.5 Contact engagement and separation forces. When tested in accordance with 4.7.6, the force required to insert and withdraw the specified pin shall be initially 18 ounces maximum and 0.7 ounce minimum. After conditioning, the maximum engagement force shall be 22 ounces and minimum separation force shall be 0.6 ounce.

3.6.6 Resistance to test probe damage. The socket contacts shall meet the contact resistance requirements after testing in accordance with 4.7.7. The entrance to the socket contact shall be designed to reject the entrance to a NO-GO test pin which is 0.044 ± .001 inch maximum diameter.

3.6.7 Contact retention. In unmated but assembled connectors, the contacts shall withstand an axial load of 10 pounds when tested in accordance with 4.7.8. Maximum allowable axial displacement of the contact after this test shall not exceed 0.010 inch.

3.6 8 Durability. It shall be possible to mate and unmate the connectors without deleterious effect on the mechanical or electrical performance when tested in accordance with 4.7.9.

3.6.9 Cable retention force (except classes H and Y). When properly attached to the applicable cable, the connector shall withstand a pull force of 30 pounds or 90 percent, whichever is less, of the breaking strength of the cable when tested in accordance with 4.7.10.

3.6.10 Side load (except classes H and Y). There shall be no evidence of bending or breaking of any part of the connector when tested in accordance with 4.7.11.

3.6.11 Hermetic sealing (except class G). Connectors which are designed with glass-to-metal seals, for hermetic sealing applications, shall not leak in excess of $1x10^{-5}$ cc/second of helium at a pressure differential of one atmosphere when tested in accordance with 4.7.12.

3.6.12 Thermal shock. Connectors shall withstand the shock or repeated surface exposures to extremes of high and low temperatures without affecting the mechanical or electrical characteristics when tested in accordance with 4.7.13.

3.6.13 Shock. Connectors shall withstand a 50g shock load when tested in accordance with 4.7.14 without interruption of signal for more than 10 microseconds. In addition, they shall sustain the shock load without impairing mechanical or electrical performance.

3.6.14 Vibration. When tested in accordance with 4.7.15, connectors shall not crack, nor break, and there shall be no loosening of parts. Connectors shall be in full engagement during vibration and the coupling device shall not loosen as a result of vibration. Interruptions of electrical continuity shall not last longer than 10 microseconds.

3.6.15 High temperature. After testing in accordance with 4.7.16, mated connectors shall have an insulation resistance of 2,000 megohms. Contact resistance shall be in accordance with table IV.

3.6.16 Fuel immersion. When tested in accordance with 4.7.17, electrical or mechanical performance shall not be impaired.

3.6.17 Altitude humidity cycling. All connectors shall withstand the electrical integrity portion of the altitude humidity cycling test as specified in 4.7.18.2.

3.6.18 Ozone exposure. After ozone exposure, as specified in 4.7.19, rubber parts shall show no evidence of cracking or other damage that will affect performance adversely. A certified statement of the materials manufacturer may be submitted in lieu of performing the test.

3.6.19 Corrosion resistance. After passing the corrosion test specified in 4.7.20, the base metal of plated parts of the connectors shall not be exposed.

3.6.20 Sulphide immersion. The finish of mated connectors shall not become tarnished when tested in accordance with 4.7.21.

3.6.21 Maintenance aging. When connectors are tested as specified in 4.7.22, they shall show no evidence of severe mechanical damage and the coupling device shall remain functional.

3.6.22 Shield clamp resistance (except classes H and Y). The maximum resistance shall be as specified (see 3.1) when tested in accordance with 4.7.23.

3.7 Marking. Connectors and associated fittings shall be permanently and legibly marked in accordance with the general marking requirements of MIL-STD-130 the military PIN (see 1.2.1) and the manufacturer's federal supply code (H4-1). The marking location is optional; when practicable, a location should be picked that will least likely be covered in cable assembly or installation.

3.8 Workmanship. The connectors, including all parts and accessories, shall be constructed and finished in a thoroughly workman like manner. Particular attention shall be paid to neatness and thoroughness of soldering, freedom from burrs, and sharp edges, and freedom from loose, spattered, or excess solder, metal chips and other foreign material.

3.9 Assembly instructions. Complete assembly instructions shall be furnished by the vendor with each connector procured under this specification (see 6.4).

3.10 Recycled, recovered, or environmentally preferable materials. Recycled, recovered, or environmentally preferable materials should be used to the maximum extent possible, provided that the material meets or exceeds the operational and maintenance requirements, and promotes economically advantageous life cycle costs.

4. VERIFICATION

4.1 Classification of inspection. The inspection requirements specified herein are classified as follows:

a. Qualification inspection (see 4.5).
b. Conformance inspection (see 4.6).

4.2 Test equipment and inspection facilities. Test and measuring equipment and inspection facilities of sufficient accuracy, quality, and quantity to permit performance of the required inspection shall be established and maintained by the contractor. The establishment and maintenance of a calibration system to control the accuracy of the measuring and test equipment shall be required.

4.3 Inspection conditions. Unless otherwise specified, all inspections shall be performed in accordance with the test conditions specified in the EIA 364.

4.4 Preparation of samples. Connectors, except class Y, shall be wired with three feet of wire or cable as shown in appendix A.

4.4.1 Crimp terminations. Contacts and shield terminations shall be crimped as specified (see 3.1). When applicable, MIL-DTL-22520 tools shall be used.

4.4.2 Solder terminations. Soldering shall be in accordance with J-STD-006.

4.5 Qualification inspection. Qualification inspection shall be performed at a laboratory acceptable to the Government (see 6.3) on sample units produced with equipment and procedures normally used in production. Application for qualification tests shall be made in accordance with Provisions Governing Qualification (SD-6) (see 6.3).

4.5.1 Sample size. Unless otherwise directed by the qualifying activity (see 6.3), the test samples shall consist of 12 connectors of one polarity which shall be submitted in equal quantities of compatible mating types. The samples shall be separate into the following test groups.

a. Eight sets of mated connectors, with associated cable or wire attached, shall be divided into test groups A and B of four sets each.
b. Four unmated connectors shall compose test group C. Cable types shall be wired in accordance with 4.5.2
c. Twelve sets of mated contacts shall be divided evenly between groups D and E.

4.5.1.1 Non-removable contacts. Contacts for connectors that normally have nonremovable contacts shall be selected from contact lots that have been finished in the same manner as those in the connector. The connector shells and insulators shall not be included in the finishing process.

4.5.2 Inspection routine. Sample units shall be subjected to the qualification inspection specified in table VI, in the order shown.

4.5.3 Failures. One or more failures in any of the applicable inspection shall be cause for refusal to grant qualification.

TABLE VI. Qualification inspection.

Inspection	Requirement paragraph	Test method paragraph	Test groups				
			A	B	C	D	E
Visual and mechanical inspection 1/	3.1, 3.4, 3.5, 3.7, 3.8	4.7.1	1	1	1	1	1
Insulation resistance	3.6.1	4.7.2	4	4	4		
Dielectric withstanding voltage	3.6.2	4.7.3	4	4			
Contact resistance	3.6.3	4.7.4		4		6	6
Low signal level contact resistance	3.6.4	4.7.5		4		6	6
Contact engagement and separation forces	3.6.5	4.7.6				6	
Resistance to test probe damage	3.6.6	4.7.7			4		
Contact retention	3.6.7	4.7.8			4		
Durability	3.6.8	4.7.9			4		6
Cable retention force (except classes H and Y)	3.6.9	4.7.10	4				
Side load (except classes H and Y)	3.6.10	4.7.11			4		
Hermetic sealing (except class G)	3.6.11	4.7.12		4			
Thermal shock	3.6.12	4.7.13		4			
Shock	3.6.13	4.7.14		4			
Vibration	3.6.14	4.7.15		4			
High temperature	3.6.15	4.7.16		4		6	
Fuel immersion	3.6.16	4.7.17	4			6	
Altitude humidity cycling	3.6.17	4.7.18	4				
Ozone exposure	3.6.18	4.7.19			4		
Corrosion resistance	3.6.19	4.7.20		4		6	
Sulphide immersion	3.6.20	4.7.21	4		4		
Maintenance aging	3.6.21	4.7.22	4	4			
Shield clamp resistance (except classes H and Y)	3.6.22	4.7.23	2	2			

1/ Marking will be considered defective only if it is illegible at the completion of the required tests.

4.5.4 Retention of qualification. To retain qualification, the contractor shall verify in coordination with the qualifying activity and 4.6.3, the capability of manufacturing products which meet the performance requirements of this specification. Refer to the qualifying activity for the guidelines necessary to retain qualification to this particular specification. The contractor shall immediately notify qualifying activity any time that the inspection data indicates failure of the qualified product to meet the performance requirements of this specification.

4.5.5 Qualification of additional polarities. Qualification may be granted for all polarities of one series, class, and type of connector, provided connector samples of each of the four bayonet configurations have passed the tests in table VI in a different series, class, or type.

4.5.6 Qualification of additional cable sizes (class G and H). Qualification may be granted for additional cable sizes provided those cable sizes have passed the tests in table VI in a different type configuration. For additional cable sizes not previously tested, four mated connector samples shall be subjected to the inspections specified in table VII.

TABLE VII. Qualification of additional cable sizes.

Inspection	Requirement paragraph	Test method paragraph
Visual and mechanical inspection 1/	3.1, 3.4, 3.5, 3.7, 3.8	4.7.1
Insulation resistance	3.6.1	4.7.2
Dielectric withstanding voltage	3.6.2	4.7.3
Cable retention force (except classes H and Y)	3.6.9	4.7.10
Side load (except classes H and Y)	3.6.10	4.7.11
Corrosion resistance	3.6.19	4.7.20
Shielded clamp resistance (except classes H and Y)	3.6.22	4.7.23

1/ Marking will be considered defective only if it is illegible at the completion of the required tests.

4.6 Conformance inspection.

4.6.1 Inspection of product for delivery. Inspection of product for delivery shall consist of group A inspection.

4.6.1.1 Inspection lot. An inspection lot shall consist of all connectors of the same PIN produced under essentially the same conditions, and offered for inspection at one time.

4.6.2 Group A inspection. Group A inspection shall consist of the inspections specified in table VIII in the order shown.

4.6.2.1 Sampling plan (group A). Table VIII tests shall be performed on a production lot basis. Samples shall be selected in accordance with table IX. If one or more defects are found, the lot shall be screened for that particular defect and defective parts removed. A new sample of parts shall be selected in accordance with table IX and all group A tests again performed. If one or more defects are found in the second sample, the lot shall be rejected and shall not be supplied to this specification.

TABLE VIII. Group A inspection.

Inspection	Requirement paragraph	Test method paragraph
Visual and mechanical inspection 1/	3.1, 3.4, 3.5, 3.7, 3.8	4.7.1
Dielectric withstanding voltage 2/	3.6.2	4.7.3
Contact engagement and separation force	3.6.5	4.7.6
Hermetic seal (except class G)	3.6.11	4.7.12

1/ Marking will be considered defective only if it is illegible at the completion of the required inspections.
2/ Does not apply to connectors with all contacts and insulation unassembled.

TABLE IX. Inspection level.

Lot size	Visual and mechanical inspection
1 to 20	All
21 to 280	20
281 to 1,200	47
1,201 to 3,200	53
3,201 to 10,000	68
10,001 to 35,000	77
35,001 to 150,000	96
150,001 to 500,000	119
500,001 to over	143

4.6.3 Group B inspection. Group B inspection shall consist of the inspections specified in table X, in the order shown. Sample units shall be selected from inspection lots that have passed group A inspection.

TABLE X. Group B inspection.

Inspection	Requirement paragraph	Test method paragraph	Mated group A	Not mated group B	Contacts group C
Visual and mechanical inspection 1/	3.1, 3.4, 3.5, 3.7, 3.8	4.7.1	X	X	X
Maintenance aging	3.6.21	4.7.22	X		
Insulation resistance	3.6.1	4.7.2	X		
Dielectric withstanding voltage	3.6.2	4.7.3	X	X	
Contact resistance	3.6.3	4.7.4	X		X
Side load (except classes H and Y)	3.6.10	4.7.11	X		
Fuel immersion	3.6.16	4.7.17	X		
Corrosion resistance	3.6.19	4.7.20		X	X

1/ Marking will be considered defective only if it is illegible at the completion of the required tests.

4.6.3.1 Sampling plan. Sample units of the same PIN, representative of production at the time of selection shall be selected at six month intervals for 1 year. Upon passing this inspection, contractor may select sample units every 12 months. If the second level of sampling is passed two successive times, the contractor may select sample units every 24 months. In the event of a failure, sampling shall revert to the 6-month interval.

4.6.3.2 Failures. If one or more units fail to pass group B inspection, the sample shall be considered to have failed.

4.6.3.3 Rejected lots. If an inspection lot is rejected, the contractor may rework it to correct the defects, or screen out the defective units, and resubmit for reinspection. Resubmitted lots shall be inspected using tightened inspection and shall not thereafter be tendered for acceptance unless the former rejection or requirement of correction is disclosed. Such lots shall be separate from new lots, and shall be clearly identified as reinspected lots.

4.6.3.4 Disposition of sample units. Sample units which have been subjected to group B inspection shall not be delivered on the contract or order.

4.6.3.5 Noncompliance. If a sample fails to pass group B inspection, the manufacturer shall notify the qualifying activity and the cognizant inspection activity of such failure and take corrective action on the materials or processes, or both, as warranted, and on all units of product which can be corrected and which were manufactured under essentially the same conditions, with essentially the same materials, processes, etc, and which are considered subjected to the same failure. Acceptance and shipment of the product shall be discontinued until corrective action, acceptable to the qualifying activity has been taken. After the corrective action has been taken, group B inspection shall be repeated on additional sample units (all inspection, or the inspection which the original sample failed, at the option of the qualifying activity). Group A inspection may be reinstituted; however, final acceptance and shipment shall be withheld until the group B inspection has shown that the corrective action was successful. In the event of failure after reinspection, information concerning the failure shall be furnished to the cognizant inspection activity and the qualifying activity.

4.7 Methods of inspection.

4.7.1 Visual and mechanical examination. Connectors shall be inspected to verify that the materials, screw threads, physical dimensions, marking, and workmanship are in accordance with the applicable requirements.

4.7.2 Insulation resistance. The connector shall be measured for insulation resistance between the center conductor and connector body, or inner and outer conductors of wired and mated assemblies, at 500 volts dc in accordance with test procedure 021 of EIA 364 (see 3.6.1).

4.7.3 Dielectric withstanding voltage. A dielectric withstanding voltage test for both mated and unmated connectors shall be conducted in accordance with test procedure 020 of EIA 364. The test voltage shall be in accordance with table III (see 3.6.2).

4.7.4 Contact resistance. Electrical resistance of mated connector inner ands outer contracts shall be determined separately in accordance with test procedure 023 of EIA 364. Test current shall be in accordance with table IV (see 3.6.3).

4.7.4.1 Inner contacts. A test current as required by table IV shall be applied to the ends of the wire attached to the mated contacts. One test probe shall be placed on each end of the mated contact pair and the millivolt drop shall be measured by means of a suitable instrument.

4.7.4.2 Outer contacts. Test as above, except that the current is applied to the coaxial shield of the attached cables, and the voltage test probes placed on each end of the mated connector pair.

4.7.5 Low signal level contact resistance. When tested in accordance with test procedure 023 of EIA 364, the low signal level contact resistance of each mated pair shall not exceed the applicable values specified in table V (see 3.6.4).

4.7.6 Contact engagement and separation forces. When tested in accordance with test procedure 037 of EIA 364, the force levels shall comply with 3.6.5. A 0.0390 +.0000 -.0001 inch diameter pin shall be inserted and removed from each socket contact. The engagement forces shall be measured during insertion. A 0.0370 +.0001, -.0000 inch diameter pin shall be inserted and removed from each contact and the separation force shall be measured during removal. Except as noted herein, the pins shall conform to SAE-AS31971. The insertion depth shall be 0.125 inch minimum.

4.7.7 Resistance to test probe damage (see 3.6.6). Socket contacts shall be tested in accordance with test procedure 025 of EIA 364. The following details and exceptions shall apply:

a. The contact shall be locked into a connector.
b. The test probe shall have a diameter of 0.038 ±0.001 inch.
c. While inserted, a bending moment of .5 inch-pound ±10 percent shall be applied to the probe.
d. After the test, the contacts shall meet the requirements of 3.5.5.
e. The NO-GO test pin (0.044 ± .001 inch diameter) shall be applied with a force of 5 ±1 pounds.

4.7.8 Contact retention (see 3.6.7). An unmated connector assembled with its proper cable shall be tested in accordance with test procedure 029 of EIA 364. The following details shall apply:

a. The axial load shall be 10 pounds.
b. The load shall be applied from the mating end.
c. The axial displacement shall be in accordance with 3.6.7.

4.7.9 Durability (see 3.6.8). Parts of mated connectors shall be tested in accordance with test procedure 009 of EIA 364. The connectors shall be mated and unmated 500 times.

4.7.10 Cable retention force (except classes H and Y). The connector shall be properly wired to a 3-foot length of cable and connected in a test circuit to indicate any discontinuity. It shall then be subjected to an axial pull force which will tend to pull the attached cable from the connector. The cable shall not separate from the connector nor indicate discontinuity between the shield and the shell or the center conductor and the center contact (see 3.6.9).

4.7.11 Side load (except classes H and Y) (see 3.6.10).

4.7.11.1 Cable plugs. Cable plugs and right-angle cable plugs shall be mated with a fixed, mounted receptacle and shall withstand a side-load force of 30 pounds or 90 percent of breaking strength of cable applied at the cable end and at right angles to the major axis of the mounted jack (see figure 2a and 2b).

4.7.11.2 Cable receptacles. A side-load test shall not be required for cable receptacles.

4.7.11.3 Panel mounting receptacles. Panel mounting receptacles shall be mounted on a panel and shall withstand a side-load force of 30 pounds or 90 percent of breaking strength of cable applied at the cable end and at right angles to the major axis (see figure 2c).

4.7.11.4 Adapters. Adapters shall be secured to a fixed, mounted receptacle or clamped in a vise and shall withstand a side-load force of 25 pounds applied at the other end and at right angles to the major axis (see figure 2d).

4.7.12 Hermetic sealing (except class G) (see 3.6.11). Connectors shall be in accordance with test procedure 002 of EIA 364. The following detail shall apply:

The pressure differential shall be one atmosphere.

4.7.13 Thermal shock. A pair of mated and wired connectors shall be tested in accordance with test procedure 032 of EIA 364, test condition I, 5 cycles (see 3.6.12).

4.7.14 Shock (see 3.6.13). A pair of wired and mated connectors shall be tested in accordance with test procedure 027 of EIA 364, test condition A. The following details and exceptions shall apply:

a. Connectors shall be mounted on the shock device or carriage as shown on figure 3 of the vibration test.
b. The connector shall be fully wired and the cable clamped to points that move with the connector. A minimum of 8 inches of cable shall be unsupported behind the rear of each connector.
c. Inner and outer contacts shall be wired in series and a test current of 100 milliamperes flowing during the test. The open circuit voltage shall be 6 volts. A check shall be made for interruption of the test current.
d. After testing, the connectors shall have remained mated and mechanically functional.

4.7.15 Vibration. The connector assembly shall be mounted as shown on figure 3 and vibrated in accordance with test procedure 028 of EIA 364, condition IV. In addition, vibration shall be conducted at a low temperature ambient of –55°C and a high ambient of 200°C. Inner and outer contacts shall be wired in series with at least 100 milliamperes of current flowing. The open circuit test voltage shall be 6 volts. A suitable instrument shall be used to monitor current flow and to indicate any discontinuity of contact or interruption of current flow. Duration of vibration at extremes of temperature shall be 25 percent of the duration specified for the standard temperature condition. The connectors shall remain in full engagement during vibration. The coupling device shall not loosen and there shall be no cracking or breaking of parts (see 3.6.14).

4.7.15.1 Connector mounting. The vibration mounting shall be in accordance with figure 3 except as specified herein. The receptacle shall be mounted on an adapter plate, using the normal mounting provisions and suitable hardware. The connector mounting bracket may be of another design, provided the connectors received the required magnitude of vibration. The associated plug or adapter shall be mated with the receptacle, as used in service. Safety wires or supplementary locking devices shall not be used.

4.7.16 High temperature. Mated connectors shall be subjected to 200°C for 1 hour. At the end of this time and while at the elevated temperature the connectors shall be subjected to the insulation resistance test 4.7.2 and the contact resistance test 4.7.4 (see 3.6.15).

4.7.17 Fuel immersion. Mated and cabled connectors shall be immersed in type II hydrocarbon fuel in accordance with ASTM D471 at +71°C for 7 days. Following this test, the connectors shall unmate and mate satisfactorily with their corresponding plug or receptacle and pass the insulation resistance, dielectric withstanding voltage and contact resistance tests (see 3.6.16).

4.7.17.1 Fluids. Separate samples of each of the nonmetallic parts of the connectors shall be immersed in each of the fluids listed in table XI for the specified time and temperature. At the end of this period, all parts shall be rinsed, air blasted, and dried at 40°C for 24 hours. A visual inspection shall be made to insure that there is no cracking, peeling, splitting, blistering, or swelling.

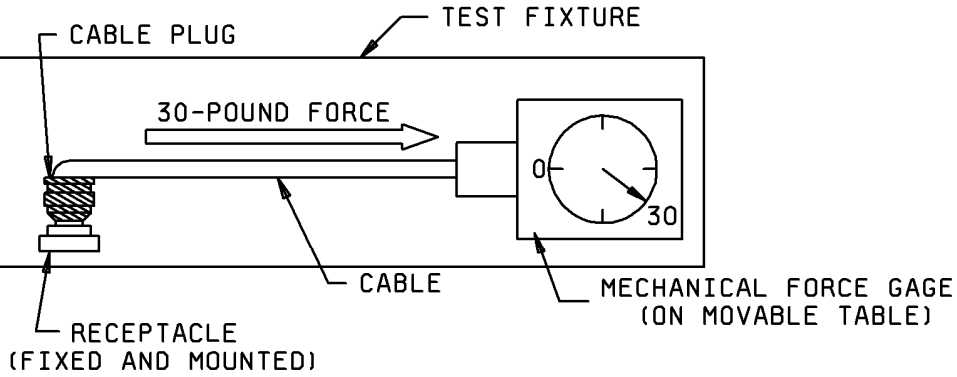

a. CABLE PLUGS

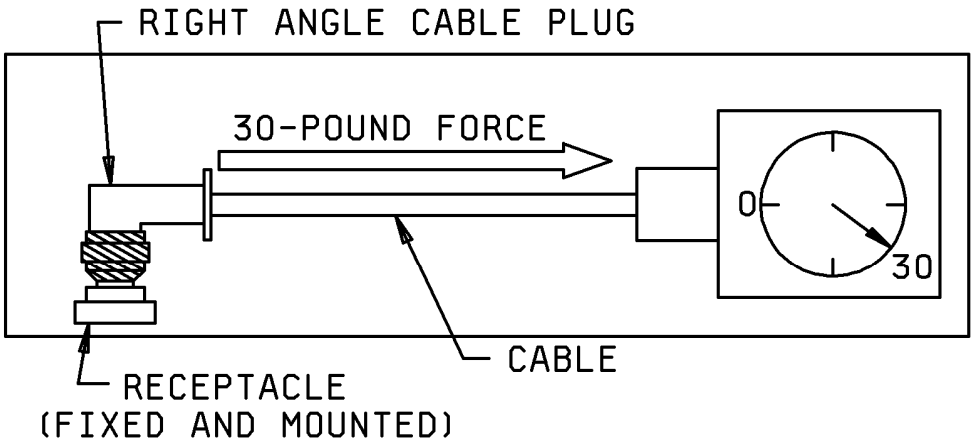

b. RIGHT ANGLE CABLE PLUGS

FIGURE 2. Side and test diagram.

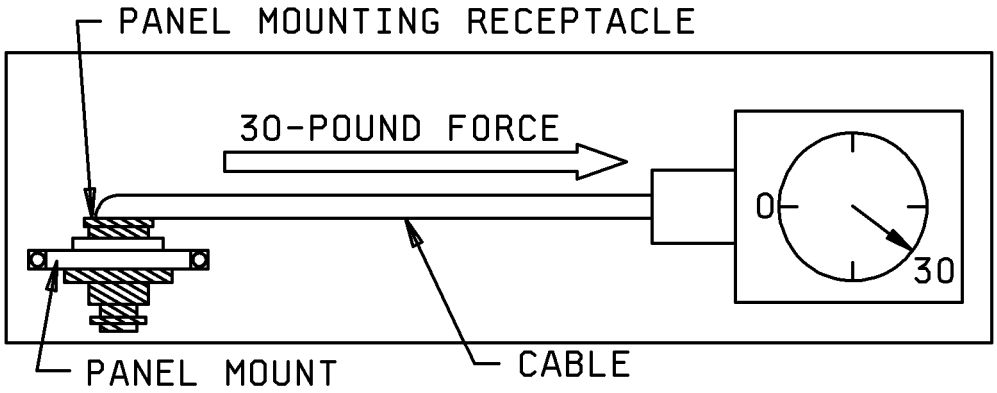

c. PANEL MOUNTING RECEPTACLES

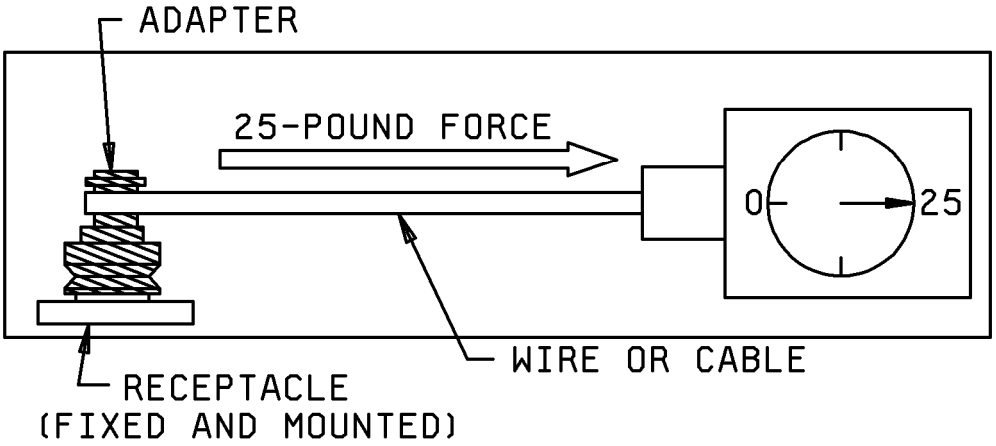

d. ADAPTERS

FIGURE 2. Side and test diagram - Continued.

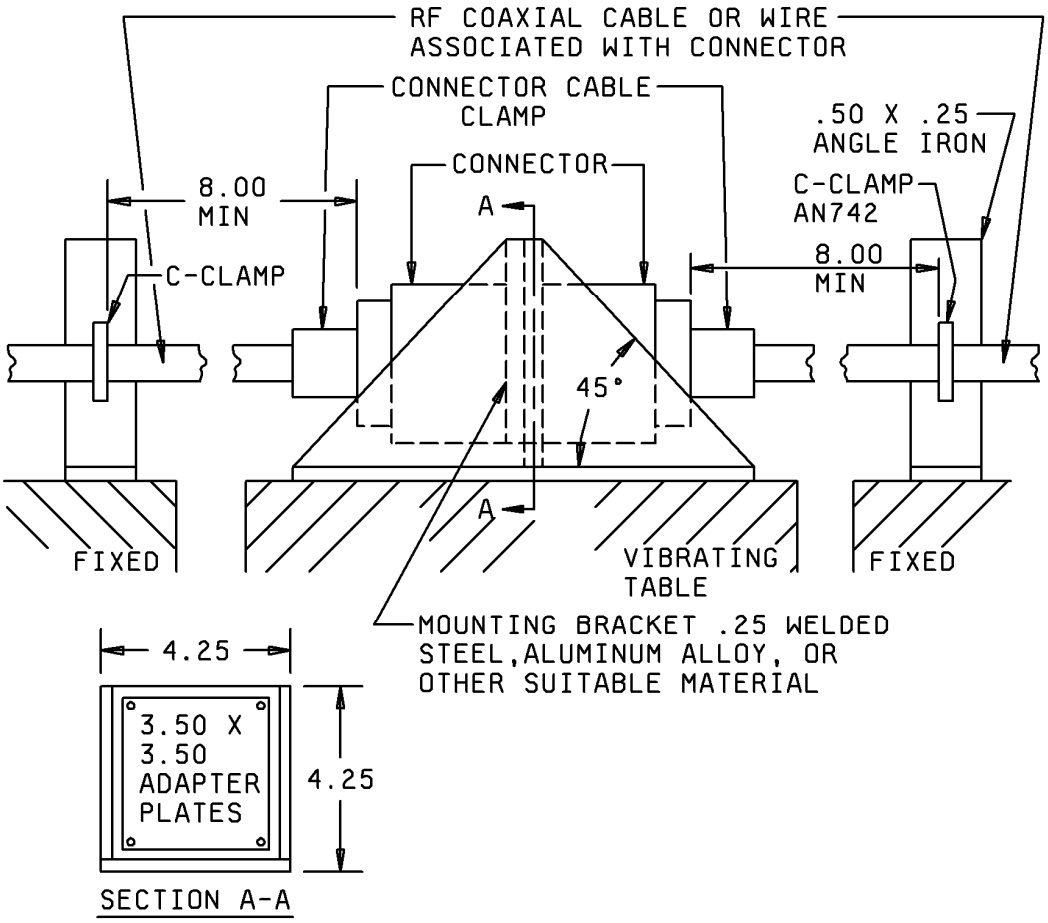

Inches	mm
.25	6.3
.50	12.7
3.50	88.9
4.25	108.0
8.00	203.2

NOTES:
1. Dimensions are in inches.
2. Metric equivalents are given for general information only.

FIGURE 3. Vibration testing arrangement.

TABLE XI. Fuels.

Fluids	Specification	Temp °F	Immersion time (hours)
Aviation gasoline	ASTM D910	160	168
Aviation fuel (grade JP-4)	MIL-DTL-5624	160	168
Oil, lubricating, jet engine (grade 1010, petroleum base)	MIL-PRF-6081	160	20
Lubricating oil, aircraft	MIL-PRF-7808	160	20
Salt water (95 percent water, 5 percent chloride)		160	20
Diesel, fuel oil	A-A-52557	160	168
Hydrocarbon fluid	ASTM D471	160	168
Aviation hydraulic fluid, petroleum base	MIL-PRF-5606	160	20

4.7.18 Altitude humidity cycling (see 3.6.17). Connectors shall be mounted on a sealed test vessel and subjected to alternate vacuum-pressure environment in the presence of test fluid and water vapor at both high and low temperatures to determine leak integrity and the effects on electrical characteristics. Figure 4 shows the recommended test vessel.

4.7.18.1 Leak integrity.

a. Hermetically sealed and pressurized connectors shall be installed approximately as shown on the right side of the pressure-tight vessel as shown on figure 4.
b. The test box shall be filled with test fluid, in accordance with type III of ASTM D471, to a level of at least 4 inches above the connectors.
c. With the fluid in the test box at room temperature, 6 pounds per square inch pressure (lb/in^2) shall be applied to the box and held for 1 hour while checking for leaks.
d. With the test box at room temperature, pressure shall be slowly increased to 20 lb/in^2 and then relieved. This cycle shall be repeated for a total of 10 times. On the tenth cycle, the pressure shall be held at 20 lb/in^2. A check shall be made for signs of leakage and pressure shall be relieved.
e. The temperature of the test box shall be decreased to –54°C and pressure of 6 lb/in^2 shall be applied and held for 1 hour while checking for leaks. The temperature shall be held at –54°C and the pressure slowly increased to 20 lb/in^2 and then relieved. This cycle shall be repeated for a total of 10 times. On the tenth cycle, the pressure shall be held at 20 lb/in^2. A check shall be made for leakage. Pressure shall be relieved.
f. The temperature of the test box shall be allowed to return to room temperature and, with pressure relieved, the wire in the connector shall be pulled from the inside of the test box with a force of 5 ± .5 pounds. (For this test, a mechanical device may be rigged to pull the cable or contact from the inside without removing the cover.). With the test box still at room temperature, the box shall be pressurized at 6 lb/in^2 pressure and a check made for leaks. The pressure shall be increased to 20 lb/in^2 and a check made for leaks. Upon completion of these tests, the pressure shall be relieved.

4.7.18.2 Electrical integrity.

a. The connectors shall be removed from the test box, examined for damage, and remounted approximately as shown on the left side of figure 4 so that the connector receptacle is toward the inside of the test vessel. Both ends of the electrical wire shall terminate outside the test box. Water, containing 5 percent salt solution, shall be poured inside the box to a fluid level at least 1 inch below the connectors.

b. A vacuum of 27 inches of mercury shall be applied to the test box for 5 minutes and then relieved. The box shall be placed in an ambient temperature of 71°C for 1 hour and then reduced to -1°C for 1 hour. Insulation resistance shall be checked at 500 volts dc, using the ends of the outside lead wire and the body of the connector as terminals. The insulation resistance shall not read less than 200 megohms. This cycle shall be repeated for a total of 10 minutes.

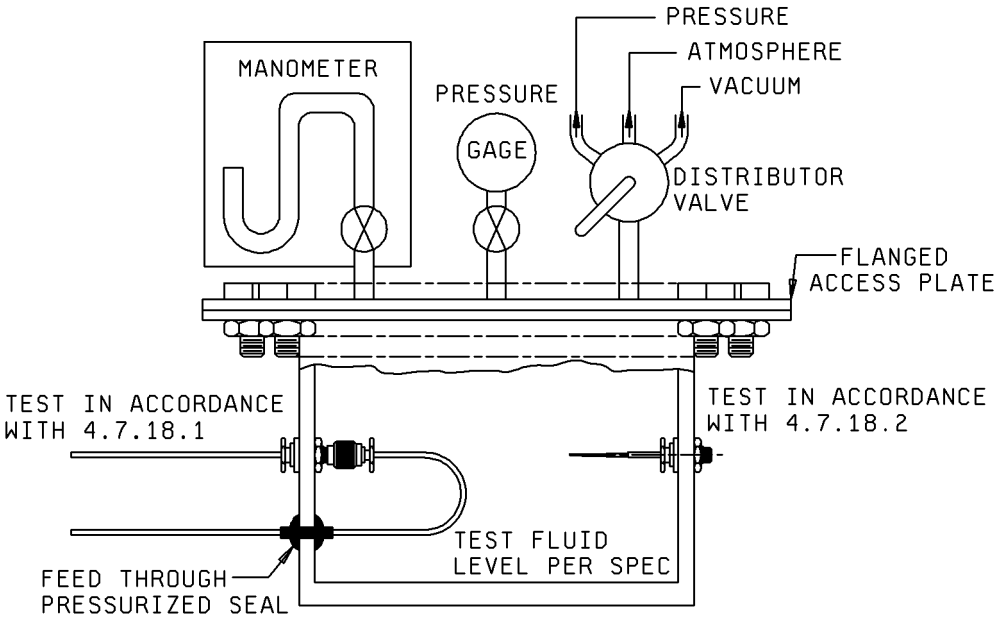

FIGURE 4. Sealed test vessel.

4.7.19 Ozone expose. Connectors shall be tested for ozone exposure in accordance with test procedure 014 of EIA 364. Rubber portions of the connectors shall be subjected to ozone exposure having a concentration of 0.010 to 0.015 percent by volume for 2 hours at room temperature. After testing, the connectors shall be visually checked for evidence of cracking or other damage that will affect performance adversely (see 3.6.18).

4.7.20 Corrosion resistance. Mated and wired connectors and contacts shall be subjected to 5 percent salt spray in accordance with test procedure 026 of EIA 364, condition B. Mated connectors shall pass the insulation resistance test (4.7.2) and outer contact resistance test (4.7.4). It shall be possible to mate and unmate the connectors as in service and there shall be no corrosion (3.6.19).

4.7.21 Sulphide immersion. Mated and cabled connectors shall be immersed for 1 minute in the following solution, prepared as specified, after which they shall be double rinsed in tap water, rinsed in alcohol, air dried, and examined for tarnish:

a. Dissolve 1 pound of sodium sulphite in 800 cm^3 of distilled water.
b. Dilute to 1000 cm^3.
c. Add 250 grains of powdered sulphur.
d. Allow solution to stand 16 hours.
e. Dilute with distilled water to a specific gravity of 1.14. This solution shall be replaced once each week.

4.7.22 Maintenance aging. The connectors shall be mated and unmated 10 times to provide accelerated maintenance aging of the contact, contact locking mechanism, and sealing provisions (see 3.6.21).

4.7.23 Shield clamp resistance (except classes H and Y) (see 3.6.22). The shield clamp (cable braid to connector) resistance measurement shall be conducted with the apparatus shown on figure 5 and under the steps indicated below:

a. Accurately determine the resistance per inch of several feet of the coaxial cable shield (braid to conductor) and record this value as R_b/inch.
b. Assemble 5-inch lengths of cable to the test sample connectors and accurately determine the shield effective length in inches from where the shield enters the braid clamp to where it enters the power supply connection, as shown on figure 6 and record this value as Eb.
c. Then the effective cable shield (braid) resistance shall be (R_b/inch) (Eb) = R_b. (Eb is the effective braid length) (R_b is the effective braid resistance).
d. Determine the total shield circuit resistance from the body of the connector to the power supply cable braid connection and record as R_T.
e. Then the resistance of the shield clamp connection will be $R_T – R_b = R_c$. R_c is the shield clamp resistance in milliohms.

NOTE: The millivolt values can be used as milliohm values, if the current has been kept to one ampere as required.

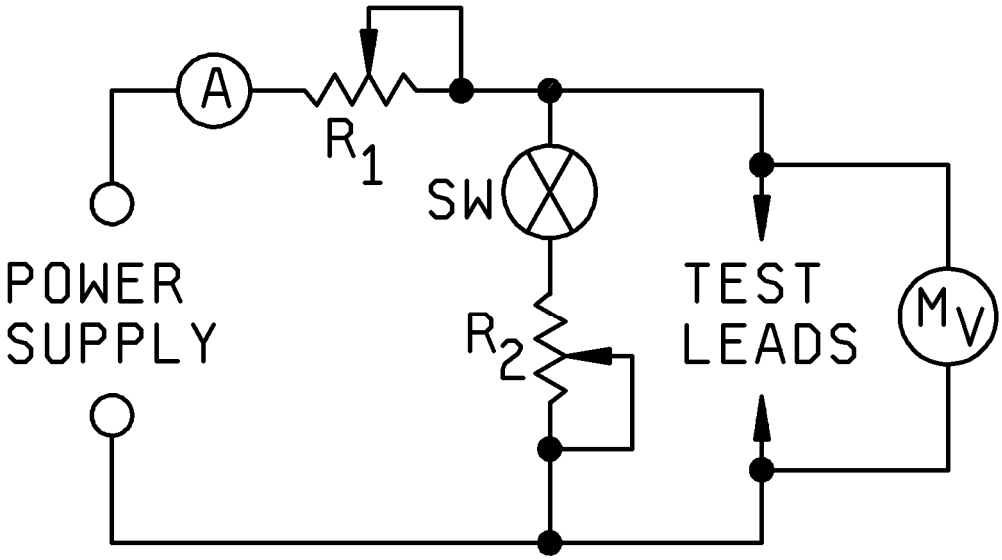

DIAGRAM

A Ammeter	0-1 Amp	R2 Variable resistor	0-100 mil ohms
R1 Variable resistor	0-15 Ohms	Mv Millivoltmeter	0-100 mV
SW Switch	Less than .01 ohms Contact resistance	Power supply	10 volts DC at 1 amp.

a. With test leads open, close switch SW.
b. Adjust R_2 for a millivoltmeter reading of 50 mV.
c. Connect test leads across the test sample and see that the mV drops significantly before opening switch SW required in (d). A drop in mV will indicate satisfactory dry circuit continuity.
d. Open SW and then adjust R_1 for a circuit current A of one ampere.
e. Measure the millivolt drop mV across the test sample and call this ET.

FIGURE 5. Resistance measurement (voltage drop).

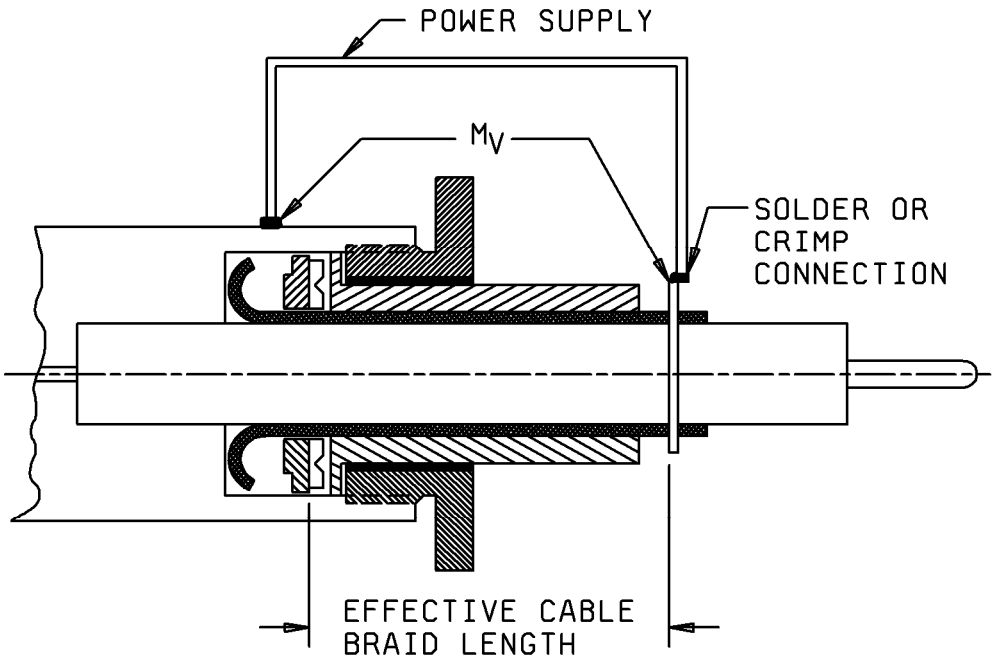

NOTE: TYPICAL SHIELD CLAMP SHOWN (SPECIFIC DESIGN NOT REQUIRED).
ILLUSTRATES METAL TO METAL CLAMPING OF THE SHIELD (REQUIRED).

FIGURE 6. Set-up for resistance measurement of cable shield clamp connection.

5. PACKAGING

5.1 Packaging. For acquisition purposes, the packaging requirements shall be as specified in the contract or order (see 6.2). When packaging of materiel is to be performed by DoD or in-house contractor personnel, these personnel need to contact the responsible packaging activity to ascertain packaging requirements. Packaging requirements are maintained by the Inventory Control Point's packaging activities within the Military Service or Defense Agency, or within the Military Service's System Command. Packaging data retrieval is available from the managing Military Department's or Defense Agency's automated packaging files, CD-ROM products, or by contacting the responsible packaging activity.

6. NOTES

(This section contains information of a general or explanatory nature that may be helpful, but is not mandatory.)

6.1 Intended use. The miniature coaxial connectors covered by this specification are intended primarily for use in capacitance-type fuel-quantity-measurement systems in all types of aircraft and missiles at the lower frequencies. These connectors are not intended to be used for RF applications.

6.2 Acquisition requirements. Acquisition documents should specify the following:

a. Title, number, and date of this specification.
b. Issue of DoDISS to be cited in the solicitation, and if required, the specific issue of individual documents referenced (see 2.1).
c. Packaging requirements (see 5.1).

6.3 Qualification. With respect to products requiring qualification, awards will be made only for products which are, at the time of award of contract, qualified for inclusion in Qualified Products List QPL No. 25516 whether or not such products have actually been so listed by that date. The attention of the contractors is called to this requirements, and manufacturers are urged to arrange to have the products that they propose to offer to the Federal Government tested for qualification in order that they may be eligible to be awarded contracts or order for the products covered by this specification. Information pertaining to qualification of products may be obtained from Defense Supply Center Columbus (DSCC-VQP), P.O. Box 3990, Columbus, Ohio 43218-3990.

6.4 Assembly instructions. Assembly instructions will include:

a. Cable preparation-stripping dimensions and tolerances.
b. List and description of crimping tools if required.
c. Pictorial presentation of sub-assemblies and loose piece parts.
d. Sufficient pertinent dimensions for verification of correct parts; as a minimum the cable entry for conductor, dielectric braid, and jacket will be specified.
e. Recommended cable clamp tightening torque (if applicable).

6.5 Specific requirements. If a specific requirement specified in the general specification is not required for an item; it should be so indicated on the specification sheet.

6.6 Definitions.

Isolated ground – where system ground is separated from real ground.
Interrupted ground – where ground path is broken at one or both ends of cable.

6.7 Subject term (key word) listing.

Contact
Finish
Material
Spring members
Qualification

6.8 Environmentally preferable material. Environmentally preferable materials should be used to the maximum extent possible to meet the requirements of this specification. Table XI lists the Environmental Protection Agency (EPA) top seventeen hazardous materials targeted for major usage reduction. Use of these materials should be minimized or eliminated unless needed to meet the requirements specified herein (see 3.6).

TABLE XI. EPA top seventeen hazardous materials.

Benzene	Dichloromethane	Tetrachloroethylene
Cadmium and Compounds	Lead and Compounds	Toluene
Carbon Tetrachloride	Mercury and Compounds	1,1,1 - Trichoroethane
Chloroform	Methyl Ethyl Ketone	Trichloroethylene
Chromium and Compounds	Methyl Isobutyl Ketone	Xylenes
Cyanide and Compounds	Nickel and Compounds	

6.9 Changes from previous issue. Marginal notations are not used in this revision to identify changes with respect to the previous issue due to the extensiveness of the changes.

APPENDIX A

A.1 SCOPE

A.1.1 Scope. The purpose of this appendix is to provide manufacturers the over all dimensions of the cables used with these connectors. This appendix is a mandatory part of this specification.

APPENDIX A

TABLE A-I. Associated cable dimensions.

MIL-C-17 PIN M17/ REF 1/	Cable designation dash digits	Center conductor solid or str. max. AWG size	Core O.D. min/max (inch)	Shielded	Jacket O.D. min/max (inch)
84-RG223	-01	20	.109/.119	Shielded	.198/.212
93-RG178	-02	20	.035/.045	Shielded	.070/.085
	-03	19	.065/.075	Shielded	.110/.120
	-04	19	082/.092	Shielded	.120/.130
	-05	19	.085/.095	Shielded	.130/.140
	-06	20	.075/.095	Nonshielded	
	-07	19	.090/.100	Shielded	.136/.150
	-08	20	.044/.054	Shielded	.074/.088
	-09	20	.052/.062	Shielded	.081/.096
	-10	20	.056/.060	Nonshielded	
	-11	20	.125/.135	Nonshielded	
	-12	19	.090/.100	Nonshielded	
119-RG174, 94-RG179, 113-RG316	-13	20	.050/.060	Shielded	.100/.110
94-RG179	-14	20	.060/.066	Shielded	.095/.105
	-15	18	.110/.120	Nonshielded	

APPENDIX A

TABLE A-I. Associated cable dimensions – Continued.

MIL-C-17 PIN M17/ REF 1/	Cable designation dash digits	Center conductor solid or str. max. AWG size	Core O.D. min/max (inch)	Shielded	Jacket O.D. min/max (inch)
54-RG122	-16	20	.105/.115	Shielded	.147/.165
	-17	20	.090/.100	Nonshielded	
95-RG180	-18	20	.100/.110	Shielded	.145/.155
28-RG58, 111-RG303, 60-RG142	-19	18	.110/.121	Shielded	.188/.202
	-20	18	.066/.070	Nonshielded	
	-21	18	.080/.090	Nonshielded	
	-22	19	.068/.070	Shielded	.133/.147
	-23	20	.123/.133	Shielded	.160/.170
	-24	18	.118/.128	Shielded	.158/.172
95-RG180	-25	20	.105/.115	Shielded	.130/.150

CONCLUDING MATERIAL

Custodians:
Navy - EC
Air Force - 11
DLA - CC

Review activities:
Navy - AS
Air Force - 99

Preparing activity:
DLA - CC

(Project 5935-4613-000)

NOTE: The activities listed above were interested in this document as of the date of this document. Since organizations and responsibilities can change, you should verify the currency of the information above using the ASSIST Online database at http://assist.daps.dla.mil.