INCH-POUND

MIL-DTL-25038J
w/AMENDMENT 1
19 April 2016
SUPERSEDING
MIL-DTL-25038J
10 January 2012

DETAIL SPECIFICATION

WIRE, ELECTRICAL, HIGH TEMPERATURE, FIRE RESISTANT, AND FLIGHT CRITICAL

This specification is approved for use by all Departments and Agencies of the Department of Defense.

1. SCOPE

1.1 Scope. This specification covers insulated single wire for electrical use in flight critical circuits and under short-time emergency conditions involving exposure to flames with temperatures up to 2,000 °F (see 6.1).

1.2 Part or Identifying Number (PIN). The PIN (see 6.2) consists of the letter "M", which indicates a defense specification item; the basic number of the specification sheet; and a coded number, as shown in the following example:

M25038/1	-	22 1/	-	9	-	A 2/
Defense specification sheet		Wire size (see 1.2.1)		Color (see 1.2.2)	-	Flight critical

1/ For MIL-DTL-25038/3, the heavier wall construction has an "H" designator added to the PIN.
2/ Only for flight critical applications.

1.2.1 Wire size. The wire size is identified by a number indicating the conductor wire size (AWG).

1.2.2 Color. The insulation color is identified by a series of numbers. The first number is the color of the insulation; the second number represents the color of the first stripe or band; the third number, the color of the second stripe or band, and so on. The colors and their corresponding numbers are shown in table I.

TABLE I. Color codes.

Number designator	Color	Number designator	Color
0	Black	5	Green
1	Brown	6	Blue
2	Red	7	Violet (purple)
3	Orange	8	Gray (slate)
4	Yellow	9	White

Comments, suggestions, or questions on this document should be addressed to: DLA Land and Maritime, Columbus, Attn: VAI, P.O. Box 3990, Columbus, Ohio, 43218-3990 or emailed to WireCable@dla.mil. Since contact information can change, you may want to verify the currency of this address information using the ASSIST Online database at https://assist.dla.mil/.

AMSC N/A

FSC 6145

2. APPLICABLE DOCUMENTS

2.1 General. The documents listed in this section are specified in sections 3 or 4 of this specification. This section does not include documents cited in other sections of this specification or recommended for additional information or as examples. While every effort has been made to ensure the completeness of this list, document users are cautioned that they must meet all specified requirements documents cited in sections 3 or 4 of this specification, whether or not they are listed.

2.2 Government documents.

2.2.1 Specifications, standards, and handbooks. The following specifications, standards and handbooks form a part of this document to the extent specified herein. Unless otherwise specified, the issues of these documents are those cited in the solicitation or contract (see 6.2).

FEDERAL STANDARD

FED-STD-228 - Cable and Wire, Insulated; Methods of Testing

DEPARTMENT OF DEFENSE SPECIFICATIONS

MIL-DTL-5624 - Turbine Fuel, Aviation, Grades JP-4 and JP-5

MIL-DTL-12468 - Decontaminating Agent, STB

MIL-DTL-25038/1 - Wire, Electrical, High Temperature, Fire Resistant, Flight Critical, Normal Weight

MIL-DTL-25038/3 - Wire, Electrical, High Temperature, Fire Resistant, Flight Critical, Light Weight, Small Diameter

MIL-DTL-83133 - Turbine Fuels, Aviation, Kerosene Types, NATO F-34(JP-8), NATO F-35, and JP-8 + 100

MIL-PRF-7808 - Lubricating Oil, Aircraft Turbine Engine, Synthetic Base

MIL-PRF-23699 - Lubricating Oil, Aircraft Turbine Engine, Synthetic Base, NATO Code O-156

MIL-PRF-83282 - Hydraulic Fluid, Fire Resistant, Synthetic Hydrocarbon Base, Metric, Nato Code Number H-537

MIL-PRF-87257 - Hydraulic Fluid, Fire Resistant; Low Temperature, Synthetic Hydrocarbon Base, Aircraft and Missile

DEPARTMENT OF DEFENSE STANDARDS

MIL-STD-104 - Limits for Electrical Insulation Color

MIL-STD-2223 - Insulated Electrical Wire, Test Methods for

(Copies of these documents are available online at http://quicksearch.dla.mil/.)

2.3 Non-Government publications. The following documents form a part of this document to the extent specified herein. Unless otherwise specified, the issues of the documents are those cited in the solicitation or contract (see 6.2).

ASTM INTERNATIONAL

ASTM B263	-	Standard Method for Determination of Cross-Sectional Area of Stranded Conductors
ASTM B355	-	Standard Specification for Nickel-Coated Soft or Annealed Copper Wire
ASTM B624	-	Standard Specification for High Strength, High Conductivity, Copper-Alloy Wire for Electronic Application
ASTM D910	-	Standard Specification for Aviation Gasolines

(Copies of these documents are available online at http://www.astm.org.)

NCSL INTERNATIONAL

NCSL Z540.3	-	Calibration Laboratories and Measuring and Test Equipment, General Requirements

(Copies of this document are available from http://www.ncsli.org.)

NATIONAL ELECTRICAL MANUFACTURERS ASSOCIATION (NEMA)

NEMA-WC 56	-	3.0 kHz Insulation Continuity Proof Testing for Wire and Cable

(Copies of this document are available from http://www.nema.org.)

SAE INTERNATIONAL

SAE J1966	-	Lubricating Oil, Aircraft Piston Engine (Nondispersant Mineral Oil)
SAE AS1241	-	Fire Resistant Phosphate Ester Hydraulic Fluid for Aircraft

(Copies of these documents are available online at from http://www.sae.org.)

2.4 Order of precedence. Unless otherwise noted herein or in the contract, in the event of a conflict between the text of this document and the references cited herein, (except for related specification sheets), the text of this document takes precedence. Nothing in this document, however, supersedes applicable laws and regulations unless a specific exemption has been obtained.

3. REQUIREMENTS

3.1 Specification sheets. The individual item requirements shall be as specified herein and in accordance with the applicable specification sheet. In the event of any conflict between requirements of this specification and the specification sheet, the latter shall govern.

3.2 Qualification. Wires furnished under this specification shall be products that are authorized by the qualifying activity for listing on the applicable qualified products list before contract award (see 6.6).

3.3 Materials.

3.3.1 Recycled, recovered, environmentally preferable, or biobased materials. Recycled, recovered, environmentally preferable, or biobased materials should be used to the maximum extent possible, provided that the material meets or exceeds the operational and maintenance requirements, and promotes economically advantageous life cycle costs.

3.3.2 Conductor material. Strands used in the manufacture of conductors shall be in accordance with ASTM B355, class 27, or ASTM B624 coated with 27% nickel by weight, as specified in the applicable specification sheet.

3.3.3 Insulating materials.

3.3.3.1 Primary insulation. The primary insulation shall consist of a concentric layer of glass fibers, ceramics, or layers of glass tape and tetrafluoroethylene tape, or a combination of materials capable of withstanding 650°F for 100 hours, and shall meet resistance, voltage, current, and other requirements specified herein or on the applicable specification sheet. Where fibrous primary insulation is used, the material shall be thoroughly impregnated with a silicone resin or other suitable compound so applied that it will not enter the strands of the conductor and affect good electrical contact. Asbestos shall not be used.

3.3.3.2 Outer layer. The outer layer of the wire shall consist of a closely woven braid of glass fiber impregnated with polytetrafluoroethylene (PTFE), extruded PTFE, or tape-wrapped and cured PTFE.

3.4 Design and construction.

3.4.1 Conductors.

3.4.1.1 Stranding.

3.4.1.1.1 Concentric-lay. Wire sizes 22 through 12 shall be constructed with concentric-lay conductors and as specified in table II. Concentric-lay shall be interpreted to be a central core surrounded by one or more layers of helically wound strands. It is optional for the direction of lay for successive layers to be alternately reversed (true concentric-lay) or to be in the same direction (unidirectional lay). If the direction of lay for the successive layers is the same, the pitch or length of lay shall increase with each successive layer. The direction of lay of individual strands in the outer layer of the concentrically stranded conductors of finished wire sizes 22 through 12 shall be left hand. The length of lay in the outer layer shall be not less than 8 nor more than 16 times the maximum conductor diameter specified in table II.

3.4.1.1.2 Rope lay. Wire sizes 10 through 0000 shall be rope lay and as specified in table II and as follows:

a. Rope lay stranded conductors shall be laid up concentrically with a center core surrounded by one of more helically wound members. It is optional for the direction of lay for successive layers to be alternately reversed (true concentric-lay) or to be in the same direction (unidirectional lay). The length of lay of the outer layer of rope lay stranded member forming the conductor shall be not less than 8 nor more than 14 times the outside diameter of the completed conductor. The direction of lay of the outside layer may be either left or right hand.

b. Members of rope lay stranded conductors. The length of lay of the conductors composing the stranded members shall be not greater than 16 times the outside diameter of the member. Stranding of the individual members may be concentric or bunch.

3.4.1.2 Splices. Splices in individual strands or members shall be butt brazed. There shall be not more than one strand splice in any 10-foot length of a stranded concentric-lay conductor. There shall not be more than one splice in any 10-foot length of any member in a rope lay conductor, except that not more than one splice of an entire member shall be permitted in any 10 feet of a rope lay conductor. Splices in members of a rope lay construction shall be so finished that the conductor diameter is not increased at the point of brazing. In no case shall the whole conductor be spliced at one point.

TABLE II. Wire construction details.

Wire size	Nominal CMA 1/ of conductor (circular mils)	Minimum CMA 1/ of conductor (circular mils)	K value	Stranding number of strands x size (AWG)	Allowable number of missing strands	Nominal diameter of individual strands inch/(mm)	Maximum diameter of stranded conductor inch/(mm)
22	754	694	1.87	19 x 34	0	.0063/(.16)	.033/(.84)
20	1,216	1,127	1.34	19 x 32	0	.0080/(.203)	.041/(1.04)
18	1,900	1,770	1.34	19 x 30	0	.0100/(.254)	.052/(1.32)
16	2,426	2,261	1.19	19 x 29	0	.0113/(.287)	.061/(1.57)
14	3,831	3,570	1.38	19 x 27	0	.0142/(.361)	.074/(1.88)
12	6,088	5,672	1.67	19 x 25	0	.0179/(.455)	.093/(2.36)
10	9,880	9,208	4.22	49 x 27	0	.0142/(.361)	.128/(3.25)
8	16,983	15,827	2.29	133 x 29	0	.0113/(.287)	.176/(4.47)
6	26,818	24,994	2.31	133 x 27	0	.0142/(.361)	.218/(5.54)
4	42,615	39,715	2.55	133 x 25	0	.0179/(.455)	.272/(6.91)
2	66,500	61,344	3.21	665 x 30	2	.0100/(.254)	.345/(8.76)
1	81,700	75,365	2.89	817 x 30	2	.0100/(.254)	.384/(9.75)
0	104,500	96,397	3.24	1,045 x 30	3	.0100/(.254)	.432/(11.0)
00	133,000	122,687	3.15	1,330 x 30	3	.0100/(.254)	.490/(12.4)
000	167,200	166,500	3.09	1,665 x 30	4	.0100/(.254)	.548/(13.9)
0000	210,900	194,547	3.32	2,109 x 30	5	.0100/(.254)	.615/(15.6)

1/ Circular mil area (CMA)

3.4.2 Insulation.

3.4.2.1 Removability of insulation. The insulation layer, or layers, shall be formed concentrically around the conductor. The insulation shall fit the conductor snugly but strip freely without adherence or damage to the conductor when removed by conventional wire stripping devices.

3.4.2.2 Concentricity. The primary insulation shall be formed concentrically around the conductor. When measured in accordance with 4.6.2 , the concentricity shall be not less than 70 percent.

3.4.2.3 Color. The color of the outer layer and any stripes shall be in accordance with MIL-STD-104, class 2.

3.5 Finished wire diameter. The diameter of the finished wire shall be as specified in the applicable specification sheet.

3.6 Finished wire weight. The weight of the finished wire shall be as specified in the applicable specification sheet.

3.7 Performance.

3.7.1 Conductor tensile strength and elongation. Strands of the finished wire shall have a tensile strength of not less than 35,000 psi and an elongation of not less than 10 percent for regular strength conductors. For high strength copper alloy conductors, the tensile strength shall be not less than 55,000 psi and the elongation shall be not less than 6 percent.

3.7.2 High temperature endurance. The resistance of the conductor shall not increase more than 15 percent during conditioning at 650 °F.

3.7.3 Bend. A wire shall show no visible cracks when bent around a mandrel with the diameter specified in the applicable specification sheet.

3.7.4 Wet dielectric. A wire shall show no evidence of electrical breakdown (arcing or flashing) between the conductor and salt water after being immersed for 5 hours at room temperature and having a potential of 1,500 V rms at 60Hz applied after the immersion period.

3.7.5 Conductor resistance. The conductor resistance of the finished wire shall be as specified in the applicable specification sheet.

3.7.6 Fluid immersion. The wire shall meet the bend and wet dielectric requirements of 3.7.3 and 3.7.4 after being immersed for 8 hours at the temperatures and in the types of fluids specified in 4.6.7.

3.7.7 Cold bend. The wire shall show no evidence of cracking of the outer surface of the insulation and shall meet the wet dielectric requirements of 3.7.4 after being exposed to a cold temperature of -65°F for 4 hours and bent as specified in the applicable specification sheet.

3.7.8 Flame resistance. The insulation shall be flame resistant. No insulation shall flake or fall off during exposure to flame up to 2,000°F. At no time shall the insulation resistance be less than 50Ω, and the flame travel shall not extend beyond the outer marking bands required in the test (see 4.6.10.1).

3.7.9 Wicking. The indicator ink solution shall not wick a distance of more than .250 inch (6.35 mm) beyond a 2-inch (50.8 mm) immersion depth between any layers or components in the insulation.

3.7.10 Thermal shock. The wire insulation layer, or layers, shall not exhibit shrinkage or expansion greater than that specified in the applicable specification sheet, when exposed to and stabilized at 500°F followed by immediate exposure to -67°F and stabilized at that temperature.

3.7.11 Insulation flaws. The finished wire shall withstand a spark-test voltage of 2,500 V rms at 60Hz or 3kHz, or an impulse dielectric voltage of 5,000V (peak), without breakdown.

3.8 Marking. The finished wire shall be identified by a printed marking applied to the outer surface or visible through the outer surface. The printed identification shall consist of the following, at intervals of 6 inches (152 mm) to 60 inches (1520 mm), as measured from the end of one complete marking to the beginning of the succeeding complete marking:

a. PIN (see 1.2).

b. Manufacturer's Commercial and Government Entity (CAGE) code.

The printing shall be green in color in accordance with MIL-STD-104, class 1, except that when the wire is solid green or any other color against which green is difficult to distinguish, the printing shall be white. Identification printing shall be applied with the vertical axis of the printed characters lengthwise of the wire when the nominal diameter of the finished wire is .050 inch (1.27 mm) or smaller. The vertical axis of the printed characters may be either crosswise or lengthwise of the wire when the nominal diameter of the wire exceeds .050 inch (1.27 mm). All printed characters shall be complete and legible.

3.8.1 Marking durability. Identification printing shall be capable of withstanding repeated abrasion. Marking durability is not applicable when printing is under a clear jacket, if used.

3.9 Workmanship. The wire shall be free from lumps, kinks, splits, abrasions, scraped or corroded surfaces, and skin impurities.

4. VERIFICATION

4.1 Classification of inspections. The inspection requirements specified herein are classified as follows:

a. Qualification inspection (see 4.3).

b. Conformance inspection (see 4.4).

4.2.1 Test conditions. Unless otherwise specified in the method, all inspections shall be performed in accordance with the test conditions specified in the applicable section of FED-STD-228.

4.3 Qualification inspection. Qualification inspection shall consist of all the qualification tests and inspections in table III.

4.3.1 Qualification samples. Finished wire samples of the following lengths shall be selected for each wire size range. The sample may be any size wire within the specified size range. When the insulation wall thickness or other construction details vary significantly within a wire range (e.g., MIL-DTL-25038/3-22), additional samples shall be qualification tested.

Wire size range (AWG)

22 through 6
4 through 0000

TABLE III. Qualification and quality conformance inspections.

Inspection or test	Requirement paragraph	Qualification tests and inspections	Conformance inspection	
			Group A	Group B
Visual and mechanical examination	3.1, 3.3 thru 3.4.2.1, 3.4.2.3, 3.5, 3.8, and 3.9	4.6.1	4.6.1	
Finished wire weight	3.6	4.6.15	4.6.15	
Concentricity	3.4.2.2	4.6.2		4.6.2
Circular mil area	3.4.1.1.1, 3.4.1.1.2	4.6.16		4.6.16
Conductor tensile strength and elongation	3.7.1	4.6.3		4.6.3
High temperature endurance	3.7.2	4.6.4		4.6.4
Bend	3.7.3	4.6.5		4.6.5
Wet dielectric	3.7.4	4.6.6		4.6.6
Fluid immersion	3.7.6	4.6.7		4.6.7
Cold bend	3.7.7	4.6.8		4.6.8
Conductor resistance	3.7.5	4.6.9		4.6.9
Flame resistance	3.7.8	4.6.10		4.6.10 1/
Wicking	3.7.9	4.6.11		4.6.11
Thermal shock	3.7.10	4.6.12		4.6.12
Insulation flaws	3.7.11	4.6.13	4.6.13	
Marking durability	3.8.1	4.6.14		4.6.14

1/ Test only one specimen. Fluid immersion is not required.

4.3.2 Retention of qualification. To retain qualification, the manufacturer shall report at two-year intervals to the qualifying activity. The qualifying activity will establish the initial reporting date. The report shall consist of:

The test results performed for conformance inspection, including the number and mode of failures. The report shall include results of all conformance tests performed and completed during the two-year period. If the report of the test results indicates nonconformance with specification requirements, and corrective action acceptable to the qualifying activity has not been taken, action may be taken to remove the failing product from the QPL.

Failure to submit the report within 30 days after the end of each two-year period may result in loss of qualification for the product. In addition to the periodic submission of inspection data, the manufacturer shall immediately notify the qualifying activity at any time during the two-year period that the inspection data indicates failure of the qualified product to meet the requirements of this specification.

In the event that no production occurred during the reporting period, a report shall be submitted certifying that the company still has the capabilities and facilities necessary to produce the item. If during two consecutive reporting periods there has been no production, the manufacturer may be required, at the discretion if the qualifying activity, to submit his qualified products to retesting in accordance with the qualification inspection requirements and the reason for no production. The report will include the number of lots that have passed, the number of lots that have failed and the groups that have failed. The test results of all reworked lots shall be identified.

4.4 Conformance inspection. Conformance inspection shall consist of and be in accordance with the group A and B inspections specified in 4.4.1 and 4.4.2 respectively. Conformance inspection shall be performed on every lot of wire produced under this specification. (see 4.3.2).

4.4.1 Group A inspection. Group A inspection shall consist of the inspections specified in group A in table III.

4.4.2 Group B inspection. Group B inspections shall consist of the tests specified in group B in table III on a sampling basis. The sample shall be selected from inspection lots that have passed group A inspection.

4.4.2.1 Sampling. A random sample shall be selected from each inspection lot in accordance with table IV. The sample size shall be based on the inspection lot size.

TABLE IV. Inspection sample.

Inspection lot size 1/	Sample size
1	1
2 to 8	2
9 to 90	3
91 to 150	12
151 to 300	19

1/ Lot size is based on the number of units of product (reels, spools, or coils) (see 4.5.1 and 4.5.2).

4.4.3 Specimen length. Each specimen for inspection shall be of the length specified in the applicable test method.

4.4.4 Rejected lots. Failure of any sample to pass conformance inspections shall constitute a failure of the lot. If an inspection lot is rejected, the manufacturer may rework the lot to correct the defects or screen out the defective units, and resubmit the lot for re-inspection. Such lots shall be separated from new lots and shall be identified as re-inspected lots.

4.4.5 Noncompliance. If a sample fails to pass conformance inspections, the manufacturer should notify the cognizant inspection activity of such failure and take corrective action on the materials, processes, or both, as warranted, on all units of the product. Acceptance and shipment of the product will be discontinued until corrective action acceptable to the inspection activity has been taken. After the corrective action has been taken, the conformance inspection shall be repeated on replacement articles. (This includes all test and examinations, or only the test that the original sample failed, at the option of the inspection activity.) Final acceptance and shipment will be withheld until the conformance inspection has shown that the corrective action was successful. In the event of failure after re-inspection, information concerning the failure should be provided to the cognizant inspection activity.

4.5 Interpretation of terms. Terms and definitions used for sampling and inspections herein shall be in accordance with the following:

4.5.1 Inspection lot. An inspection lot shall consist of all wire of the same PIN, produced under essentially the same conditions on the same machine presented for inspection and shipment at one time. For this specification, an inspection lot shall not exceed 300 units of product.

4.5.2 Unit of product. The unit of product for determining lot size under this specification shall be the quantity of continuous length of wire on one coil, reel, or spool, as applicable.

4.5.3 Sample. A sample shall consist of one or more sample units chosen at random from the inspection lot.

4.5.4 Sample unit. A sample unit shall consist of a piece of finished wire chosen at random from the inspection lot and of sufficient length to permit all applicable inspections and tests. A sample unit for quality conformance tests under this specification shall be 75 continuous linear feet of finished wire. Not more than one sample unit shall be taken from a single unit of product.

4.5.5 Specimen. A specimen is a portion of finished wire taken from the sample unit for the performance of a particular inspection or test.

4.6 Methods of inspection and test.

4.6.1 Visual and mechanical examination. Wire shall be examined to verify that the materials, design, construction, physical dimensions, splices, marking, and workmanship are in accordance with the requirements specified herein.

4.6.2 Concentricity. The concentricity of the insulation around a conductor shall be determined by first locating and recording the minimum wall thickness of a cross section of the insulation. From this point, on the outer rim of the insulation, at which the minimum wall thickness was measured, three more reference points 90° apart on the outside rim of the insulation shall be established. At each of these three reference points, the nearest strand of the conductor shall be selected and the insulation wall thickness between that strand and the outer rim of the insulation shall be measured and recorded. The average of the four measures shall be considered to be average wall thickness. Concentricity shall be expressed as the ratio of minimum-to-average wall thickness times one hundred. A wall thickness measurement shall be interpreted to be the minimum distance between the outer rim of the insulation and the rim of the outermost strand of the stranded conductor. All wall thickness measurements shall be determined under suitable magnification.

4.6.3 Conductor tensile strength and elongation. After stranding, individual strands shall be tested in accordance with method 3211 of FED-STD-228.

4.6.4 High temperature endurance. A suitable length of finished wire from each qualification (or conformance) sample shall be placed in an air oven that shall be maintained at 650±5 °F. The wire shall be placed in the oven in a manner such that two layers of wire are not touching. Either a circulating or a non-circulating oven may be used. The ends of the specimen that are outside the oven shall be connected to an electric source that may be either ac or dc. The current through the conductor shall be adjusted to stabilize at the value given in table V for the applicable wire size. When the stabilized conductor current is reached, voltage and current measurements shall be recorded. The current loaded wire shall remain in the air oven at an oven temperature of 650±5 °F for a period of 100 hours (48 hours for conformance test). The current through the conductor shall be checked daily and maintained at the required test value. At the end of the 100-hour period (48 hour period for conformance test) and while still at the stabilized temperature and conductor current, a final voltage and current measurement shall be made. Change in resistance during the conditioning period shall be calculated from the voltage and current measurements. The wire shall then be cooled to room temperature and examined for visual defects without magnification. Change in color of the finished wire or printed identification shall not be considered a defect. The ends of the wire sample that were outside the oven during conditioning shall be discarded. From the wire that was inside the oven during conditioning, the following 3-foot specimens shall be cut for further testing:

a. Specimen 1 - Conduct bend test (4.6.5) followed by wet dielectric test (4.6.6).

b. Specimens 2 through 7 - Conduct fluid immersion test (4.6.7) followed by bend test (4.6.5) and wet dielectric test (4.6.6).

c. Specimens 8 and 9, - Conduct fluid immersion test (4.6.7) followed by bend test (4.6.5) and wet dielectric test (4.6.6). Testing of specimens 8 and 9 is not required for qualification inspection. When specified by the contract or order (see 6.2), testing of specimens 8 and 9 shall be added to the conformance inspection for flight critical applications.

TABLE V. Current for conditioning.

Size	Test current (Amps)
22	4.5
20	5.5
18	9.0
16	11.5
14	16.5
12	21.0
10	28.5
8	37.5
6	52.0
4	70.0
2	94.0
1	105.0
0	127.0
00	146.0
000	169.0
0000	202.0

4.6.5 Bend. This test shall be conducted at room temperature. One end of a 3-foot specimen shall be secured to a mandrel and the other end weighted. The mandrel diameter and test load shall be as specified in the applicable specification sheet. The mandrel shall be rotated until the full length of the specimen is wrapped around the mandrel. The process shall be repeated in reverse until the full length of the specimen is again wrapped around the mandrel, but with the surface of the specimen previously outside during the first wrapping now next to the mandrel. The procedure shall be repeated until two bends in each direction have been formed in the same section of the specimen. At the completion of the test, the insulation of the specimen shall be examined for visible cracks without magnification.

4.6.6 Wet dielectric. One inch of insulation shall be stripped from each end of a 3-foot specimen of wire, and these uninsulated ends shall be fastened in metallic contact to a metal bar. The diameter of the bend shall be not greater than 40 times the diameter of the specimen. The center 24-inch section of the prepared specimen shall be immersed in a 5-percent solution of sodium chloride in tap water, at room temperature, for not less than 5 hours. At the end of this immersion period, a potential of 1,500 V rms at 60Hz shall be applied for 1 minute between the conductor and an electrode in the salt water solution.

4.6.7 Fluid immersion. The following specimens of wire from 4.6.4 shall have their center 2-foot section immersed in a fluid for 8 hours, using a separate specimen for each fluid:

a. Specimen No. 2: Aviation gasoline conforming to ASTM D910, grade 100LL.

b. Specimen No. 3: Hydraulic fluid conforming to MIL-PRF-83282 or MIL-PRF-87257 at 120±2 °F.

c. Specimen No. 4: Turbine fuel conforming to either MIL-DTL-5624, grade JP-4, or to MIL-DTL-83133, grade JP-8, at room temperature.

d. Specimen No. 5: Lubricating oil conforming to MIL-PRF-7808, at 120±2 °F.

e. Specimen No. 6 Hydraulic fluid conforming to SAE AS1241.

f. Specimen No. 7: Lubricating oil conforming to MIL-PRF-23699, at 120±2 °F.

g. Specimen No. 8: MIL-DTL-12468, at room temperature (see 4.6.4c).

h. Specimen No. 9: MIL-DTL-12468, at room temperature (see 4.6.4c).

During the immersion, the bend in each specimen shall have a diameter no greater than 40 times the diameter of the specimen. Upon removal from the fluid, the specimen shall be wiped with a clean cloth and shall remain not less than 1, nor more than 2 hours, in free air at room temperature. After that time, the specimen shall be subjected to and pass the bend test specified in 4.6.5 without failure, followed by the wet dielectric test specified in 4.6.6 Failure of the test specimen to pass these tests shall be cause for rejection.

4.6.8 Cold bend. A revolving mandrel capable of being operated from outside the cold chamber shall be used. The mandrel diameter and the test load shall be as specified in the applicable specification sheet. One end of each specimen shall be secured to the mandrel and the other end weighted. The mandrel and the specimens shall be placed in a cold chamber and the temperature of the chamber lowered to -65±5 °F. After maintaining this temperature for 4 hours, and while still at this low temperature, the specimens shall be bent around 180° of the mandrel without opening the door to the cold chamber. The time required for bending the sample around 180° of the mandrel shall be .5 minute at a uniform rate of speed. The specimens shall be allowed to return to room temperature, without straightening, and examined for visual defects. Each specimen shall then be subjected to the wet dielectric test specified in 4.6.6.

4.6.9 Conductor resistance. Conductor resistance of the finished wire shall be measured in accordance with method 6021 of FED-STD-228.

4.6.10 Flame resistance.

4.6.10.1 Preparation of specimens. A 24-inch specimen shall have its center 18-inch section immersed for 24 hours at room temperature in aviation gasoline conforming to ASTM D910, grade 100LL. A second specimen shall be immersed in a like manner for 24 hours at room temperature in a solution of 50% turbine fuel conforming to MIL-DTL-5624, grade JP-4, or MIL-DTL-83133, grade JP-8 and 50% aircraft lubrication oil conforming to SAE J1966, grade 1100. A third specimen shall be suspended for 4 hours in the vapors of aircraft lubricating oil conforming to SAE J1966, grade 1100, which shall be maintained at a temperature of 250 °F. Upon removal of the specimens from the liquid and after wiping with a clean cloth, wire bands consisting of one turn of wire, no larger than size 30, shall be wrapped around each specimen, designating its 7- inch (178 mm) middle section, plus an additional outer band 4 inches (102 mm) outside each of these two bands.

4.6.10.2 Apparatus. Each specimen shall then be mounted in the rack with the center 7-inch (178 mm) section so located that the specimen shall be centered 1 inch (25.4 mm) above the burner top plate as shown on figure 1. Each of the two nickel-chrome ribbons shall be wrapped once around the specimen snugly with the edges butted together. The two ribbons shall be 1 inch (25.4 mm) apart at the midsection of the 7-inch (178 mm) section as illustrated on figure 1. The conductor of the specimen and the nickel-chrome ribbons shall be connected in the test circuit as shown on figure 1. A shorting bar shall be inserted between the nickel-chrome ribbons and the conductor and the meter adjusted to read approximately zero ohms.

4.6.10.3 Burner adjustment. A thermocouple shall be located in a plane 1 inch (25.4 mm) above the burner top plate near the center of the burner. The burner as specified on figure 2, shall be ignited and the flow of gas, air, and secondary air shall be adjusted to give a non-oxidizing, non-reducing (neutral) flame approximately 1 inch (25.4 mm) high with a flame temperature of 2,000±50 °F, as measured by the thermocouple.

> CAUTION: The proper flame will be obtained by using a minimum amount of gas and secondary air. The flame shall be uniform over the top of the top plate area, achieved mainly by adjustment of secondary air, and the tip of the blue cone shall be approximately 1 inch above the burner top plate. The burner shall be run until a stable temperature and flame have been achieved before starting any test. The tip of each flame shall not be yellow (to achieve this, for each gas valve adjustment, the air valve shall be opened to the point just beyond that which gives a yellow-tipped flame).

4.6.10.4 Vibration. After the flame has stabilized, the specimen shall be vibrated at approximately 30Hz, with the rack having a maximum total excursion of approximately .06 inch (1.52 mm).

4.6.10.5 Test procedure. After removing the thermocouple, the vibrating specimen shall be positioned in the stabilized flame so that the lower surface of the specimen is at the same position in the flame as that previously occupied by the hot junction of the thermocouple and so that the 7-inch (178 mm) midsection is centered over the burner top plate. The specimen shall remain in this position in the flame for a 15-minute period. With the ohmmeter observed continuously during this period, the minimum reading shall be made. At the end of the 15-minute period, the burner shall be repositioned under the thermocouple and the flame temperature checked. The test shall verify that the wire is flame resistant and that no insulation flakes or falls off (see 3.7.8).

Note: If test conductor breakage occurs, the test may be repeated. Conductor breakage does not indicate test failure.

4.6.10.6 Test equipment and inspection facilities. Test and measuring equipment and inspection facilities of sufficient accuracy, quality, and quantity to permit performance of the required inspection shall be established and maintained by the manufacturer. The establishment and maintenance of a calibration system to control the accuracy of the measuring and test equipment [e.g., non-Government standard (NGS) or federal or defense standard] shall be in accordance with NCSL Z540.3 or equivalent.

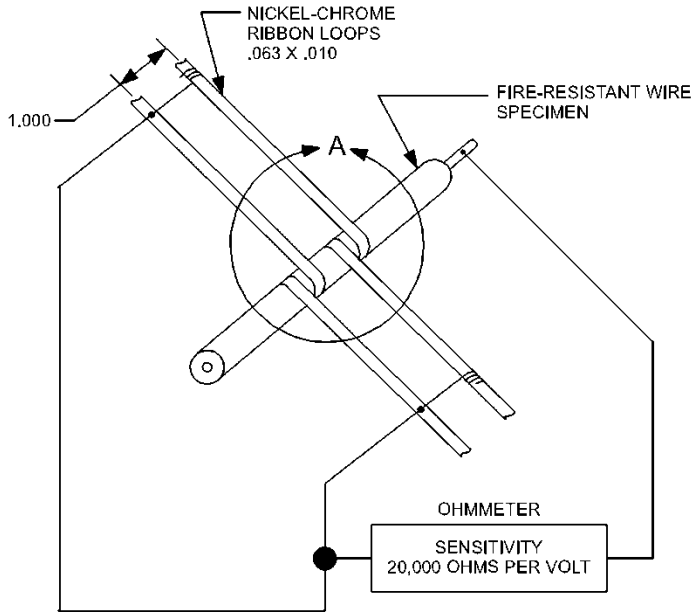

Inches	mm
.010	.254
.063	1.6
1.00	25.4

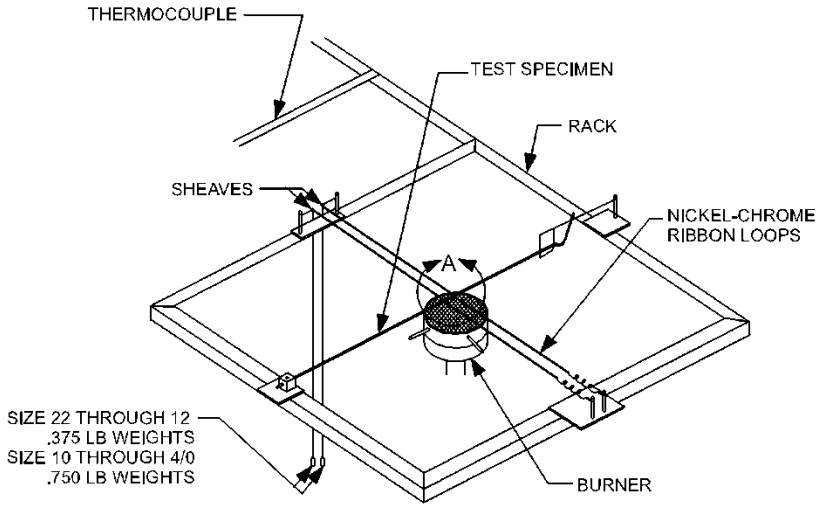

NOTES:
1. Dimensions are in inches.
2. Metric equivalents are given for information only.

FIGURE 1. Flame test fixture.

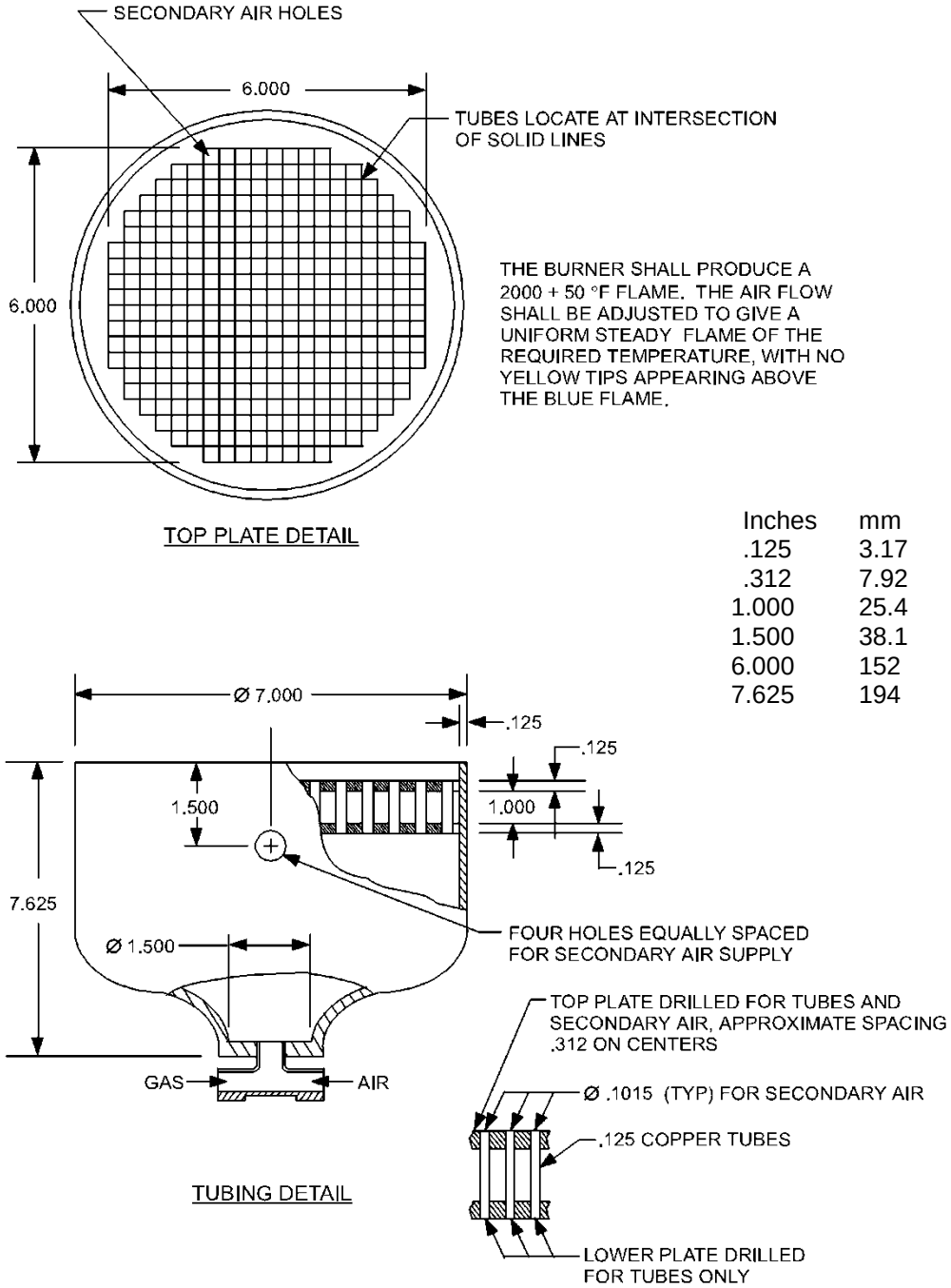

Inches	mm
.125	3.17
.312	7.92
1.000	25.4
1.500	38.1
6.000	152
7.625	194

NOTES:
1. Dimensions are in inches.
2. Metric equivalents are given for information only.

FIGURE 2. Burner details.

4.6.11 Wicking. A specimen of each finished wire size to be tested shall be cut 6±.0625 inches (152±1.59 mm) with square ends. The specimen shall be vertically immersed for 2 inches (50.8 mm) of its length in medium dry, red instrument ink (see 6.8) or equivalent, which is contained in an open test tube, and conditioned for 24 hours at room temperature in a draft-free room. After this conditioning, the ink on the surface shall be removed immediately from the 2 inches (50.8 mm) immersed by wiping gently with a clean, dry lint-free cloth. The specimen shall then be examined for wicking between insulation layers. The distance that the ink has wicked above the immersed portion of the specimen shall be measured as the distance of wicking.

4.6.12 Thermal shock.

4.6.12.1 Preparation of specimen. A specimen of wire 5 feet long shall be prepared by carefully removing 1 inch (25.4 mm) of insulation from each end of the wire. (For purposes of this test, insulation is defined as all layers of non-conducting material covering the electrical conductor, e.g., primary insulation, all tapes and braids, and jacket.) A razor blade, or equivalent, held perpendicular to the axis of the wire, shall be used to cut the insulation for the removal operation. The length of exposed conductor at each end of the specimen shall be measured to the nearest .01 inch (.254 mm). The specimen shall be formed into a loose coil not less than 1 foot in diameter and shall be laid on a wire screen for handling throughout the test.

4.6.12.2 Test procedure. The specimen shall be placed for 30 minutes in an air-circulation oven, preheated to 500±4 °F. The specimen shall then be removed from the oven and within 2 minutes shall be placed in a chamber that has been pre-cooled to -67±4 °F. The specimen shall be exposed to this temperature for 30 minutes, after which the specimen shall be removed and allowed to return to and stabilize at room temperature, 68 to 77 °F. At the conclusion of this cycle, the distance from the end of each layer of insulation to the end of the conductor shall be measured to the nearest .01 inch (.254 mm). This thermal shock cycle and the measurements shall be repeated for an additional three cycles (a total of four cycles). Any measurement varying from the original measurement by more than that specified in the applicable specification sheet shall constitute failure.

4.6.13 Insulation flaws. One hundred percent of the finished wire shall be tested using the spark test or impulse dielectric voltage test to determine the presence of insulation flaws. Any portion of the wire failing this test shall be cut out of the finished wire before final spooling.

4.6.13.1 Spark test. The finished wire shall pass through a suitable spark-test device that shall give intimate metallic contact with practically all the wire insulation surface and expose the insulation to an ac potential of 2,500V rms at 60Hz or 3KHz, in accordance with NEMA-WC 56. Electrode length and speed of wire through the electrode shall be such that the insulation shall be subjected to the test voltage for a minimum of .2 seconds.

4.6.13.2 Impulse dielectric test. The finished wire shall be tested in accordance with MIL-STD-2223, method 3002 at 5000V (peak).

4.6.14 Marking durability. The durability of product identification or color markings applied to the wire for coding shall be evaluated at 68 to 77 °F as follows:

4.6.14.1 Apparatus. The marking durability tester shall hold a short specimen of finished wire firmly clamped in a horizontal position with the upper longitudinal surface of the specimen fully exposed. The tester shall be capable of rubbing a small cylindrical steel mandrel (usually a needle), .025 inch (.64 mm) in diameter, repeatedly over the upper surface of the wire, in such position that the longitudinal axes of the mandrel and the specimen are at right angles to each other with cylindrical surfaces in contact. A

weight affixed to a jig above the mandrel shall control the force exerted normal to the surface of the insulation. A motor-driven reciprocating cam mechanism and counter shall be used to deliver an accurate number of abrading strokes in a direction parallel to the axis of the specimen. The length of the stroke shall be .375 inch (9.52 mm) and the frequency shall be 120 strokes (60 stroking cycles) per minute.

4.6.14.2 Test procedure. A specimen of finished wire shall be mounted in the specimen clamp and the jig shall be adjusted to deliver a weight of 150g through the abrading mandrel to the markings on the insulation. The specimen shall be subjected to 500 strokes (250 cycles) of the mandrel and shall then be examined using the naked eye. If there is a continuous line of erasure or obliteration through the stripe, band, or printed identification marking, exposing the primary insulation, the specimen shall be considered as having failed. Three specimens shall be tested for each sample unit and failure of any specimen shall constitute failure of the sample unit.

4.6.15 Finished wire weight. The weight of the finished wire shall be measured for compliance with the weight specified in the applicable specification sheet. The weight of each lot of finished wire shall be determined by procedure I (see 4.6.15.1). Lots failing to meet the wire weight requirement in accordance with procedure I shall be subjected to procedure II (see 4.6.15.2). All reels or spools failing to meet the requirements of the applicable specification sheet shall be rejected.

4.6.15.1 Procedure I. The length and weight of a specimen at least 10 feet long shall be accurately measured with the resultant measurements transposed to pounds per 1,000 feet.

4.6.15.2 Procedure II. The net weight of the finished wire on each reel or spool shall be obtained by subtracting the tare weight of the reel or spool from the gross weight of the reel or spool containing the finished wire. The net weight of wire on each reel or spool shall be divided by the accurately determined length of finished wire on that reel or spool and the result converted to pounds per 1,000 feet. When wood or moisture absorbent materials are used for reel or spool construction, weight determinations shall be made under essentially the same conditions of relative humidity.

4.6.16 Circular Mil Area (CMA). Before the application of any insulation, the stranded conductor shall be tested in accordance with ASTM B263. Appropriate K values and the minimum CMA values are listed in table II.

5. PACKAGING

5.1 Packaging. For acquisition purposes, the packaging requirements shall be as specified in the contract or order (see 6.2). When packaging of materiel is to be performed by DoD personnel or in-house contractor personnel, these personnel need to contact the responsible packaging activity to ascertain packaging requirements. Packaging requirements are maintained by the Inventory Control Point's packaging activities within the Military Service or Defense Agency, or within the military service's system commands. Packaging data retrieval is available from the managing Military Department's or Defense Agency's automated packaging files, CD-ROM products, or by contacting the responsible packaging activity.

6. NOTES

(This section contains information of a general or explanatory nature that may be helpful, but is not mandatory.)

6.1 Intended use. The basic insulated wire covered by this specification is intended for use in circuits in high performance military aircraft where it is necessary to maintain the electrical integrity of the

insulated conductor for 15 minutes in a 2,000 °F flame, with the operating potentials not exceeding 125 V rms.

6.2 Acquisition requirements. Acquisition documents should specify the following:

a. Title, number, and date of this specification.

b. PIN (see 1.2).

c. The specific issue of individual documents referenced (see 2.2.1 and 2.3).

d. Wire length (see 6.3).

e. Packaging requirements (see 5.1, 6.3, 6.4, and 6.5).

6.3. Wire length. No less than 85% of the total quantity of each size of wire ordered will be in lengths equal to or greater than the nominal length specified in table VI. No wire will be accepted in lengths shorter than the specified minimum acceptable length. The maximum quantity of wire in a single length will be limited only by manufacturing and handling facilities.

TABLE VI. Wire lengths.

Wire size AWG	Nominal length on reel or spool (feet)	Minimum acceptable length (feet)
22 to 6, inclusive	500	100
4 to 2, inclusive	250	50
1 to 0000, inclusive	100	25

6.4 Reels and spools. Wire will be delivered wound on non-returnable reels or spools, each having an appropriate diameter for the respective size. In no case will the barrel of the reel or spool be less than 5.5 inches (140 mm) in diameter. The footage of individual continuous wire lengths will be marked on each reel or spool in the sequence of unwinding.

6.5 Special marking. In addition to packaging markings that may be specified by the organizations cited in 5.1 and the acquisition documents (see 6.2.e) special marking for packaging must include the following:

a. Number of this specification.

b. PIN.

c. Wire size.

d. Date of manufacture.

e. Name of manufacturer.

6.6 Qualification. With respect to products requiring qualification, awards will be made only for products which are, at the time of award of contract, qualified for inclusion in Qualified Products List QPL No. 25038, whether or not such products have actually been so listed by that date. The attention of the contractors is called to these requirements, and manufacturers are urged to arrange to have the products that they propose to offer to the Federal Government tested for qualification in order that they may be eligible to be awarded contrasts or orders for the products covered by this specification. Information pertaining to qualification of products may be obtained from the DLA Land and Maritime - VQP, P.O. Box 3990, Columbus, OH 43218-3990. An online listing of products qualified to this specification may be found in the Qualified Products Database (QPD) at https://assist.dla.mil/.

6.7 Subject term (key word) listing.

Endurance
Flame
Polytetrafluoroethylene (PTFE)
Tensile strength
Wet dielectric
Wicking

6.8 Medium dry, red instrument ink. MIL-DTL-25038 specifies that “Easterline Angus, Medium Dry, Red Instrument Ink” be used in the wicking test (see 4.6.11). Medium dry, red instrument ink is currently available as "Angus, Medium Dry, Red Instrument Ink” from Westronics, Kingwood ,TX.

6.9 Environmental. Environmental pollution prevention measures are contained in the packaging material specifications referenced herein. Refer to material specifications or the preparing activity for recommended disposability methods.

6.10 Amendment notations. The margins of this specification are marked with vertical lines to indicate modifications generated by this amendment. This was done as a convenience only and the Government assumes no liability whatsoever for any inaccuracies in these notations. Bidders and contractors are cautioned to evaluate the requirements of this document based on the entire content irrespective of the marginal notations.

CONCLUDING MATERIAL

Custodians:
Army - CR
Navy - AS
Air Force – 85
DLA - CC

Review activities:
Army - AR, CR4, MI
Navy - OS
Air Force – 99

Preparing activity:
DLA - CC

(Project 6145-2016-029)

NOTE: The activities listed above were interested in this document as of the date of this document. Since organizations and responsibilities can change, please verify the currency of the information above using the ASSIST Online database at https://assist.dla.mil/.