INCH-POUND
MIL-DTL-24646/9C
29 January 2015
SUPERSEDING
MIL-DTL-24646/9B
29 October 2008

DETAIL SPECIFICATION SHEET

# FUSE BOXES, FEEDER DISTRIBUTION, SUBMERSIBLE, (15 FEET), 250 VOLTS, ALTERNATING CURRENT, SINGLE PHASE BUSES, 0-30 AMPERE FUSES, SYMBOLS 555.1, 556.1, 557.1, 558.1, AND 559.1

This specification is approved for use by all Departments and Agencies of the Department of Defense.

The requirements for acquiring the product described herein shall consist of this specification sheet and MIL-DTL-24646.

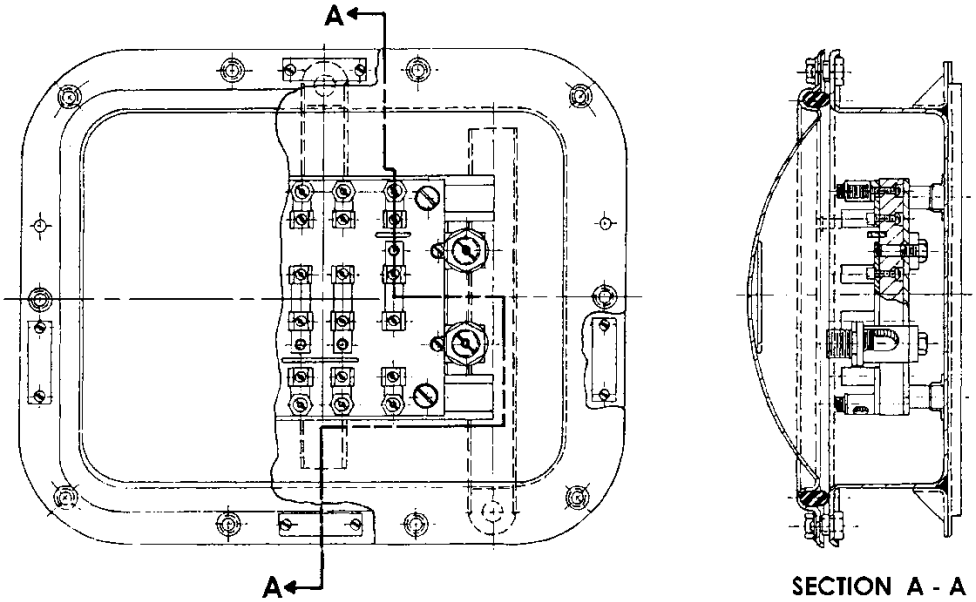


FIGURE 1. Fuse box assembly, typical. Item No. 01, 02, 03, 04, 05
(Symbol 556.1 shown)

NOTES:
1. Dimensions are in inches.
2. Unless otherwise specified herein, tolerances shall be as follows:
   Two place decimals - plus or minus 0.02.
   Three place decimals - plus or minus 0.005.

AMSC N/A

FSC 5920

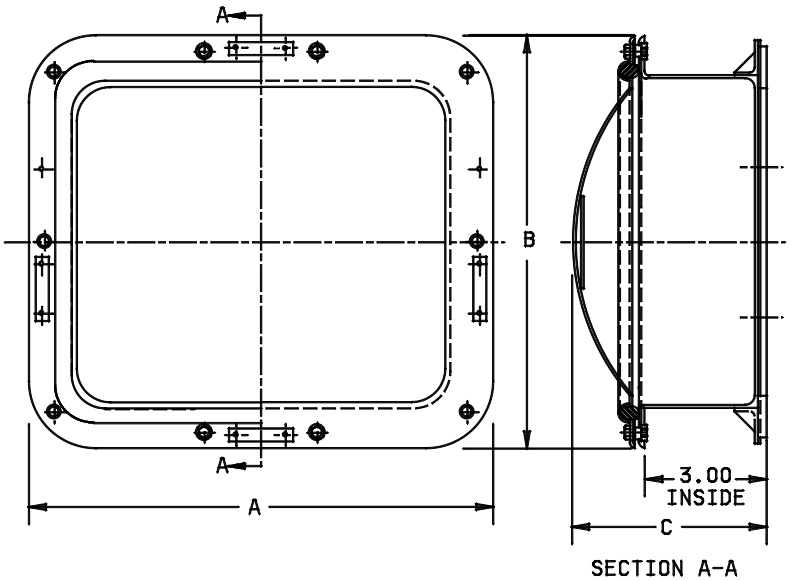


| Symbol no. | Dimensions (ref) | | |
|---|---|---|---|
| | A | B | C |
| 551.1 | 13.38 | 13.38 | 5.62 |
| 556.1 | 16.38 | 13.38 | 5.62 |
| 557.1 | 19.38 | 13.38 | 5.62 |
| 558.1 | 21.38 | 13.38 | 5.62 |
| 559.1 | 27.38 | 15.38 | 5.62 |

FIGURE 2. Enclosure, overall dimensions. Item No. 06, 07, 08, 09, 10
(Symbols 555.1, 556.1, 557.1, 558.1 and 559.1)

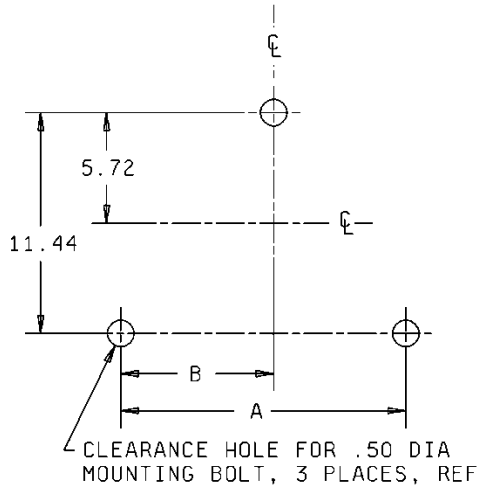


| Symbol no. | Dimensions | |
|---|---|---|
| | A | B |
| 555.1 | 5.75 | 2.88 |
| 556.1 | 9.25 | 4.63 |
| 557.1 | 11.75 | 5.88 |
| 558.1 | 14.25 | 7.12 |

A. Symbols 555.1, 556.1, 557.1, and 558.1

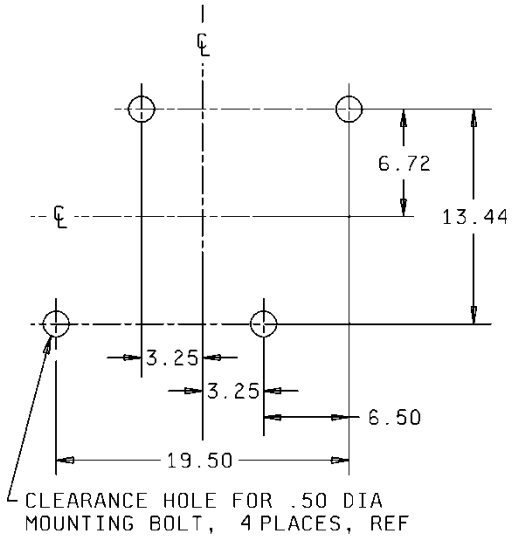


B. Symbol 559.1

FIGURE 3. Mounting dimensions, ref.
(Symbols 555.1, 556.1, 557.1, 558.1 and 559.1)

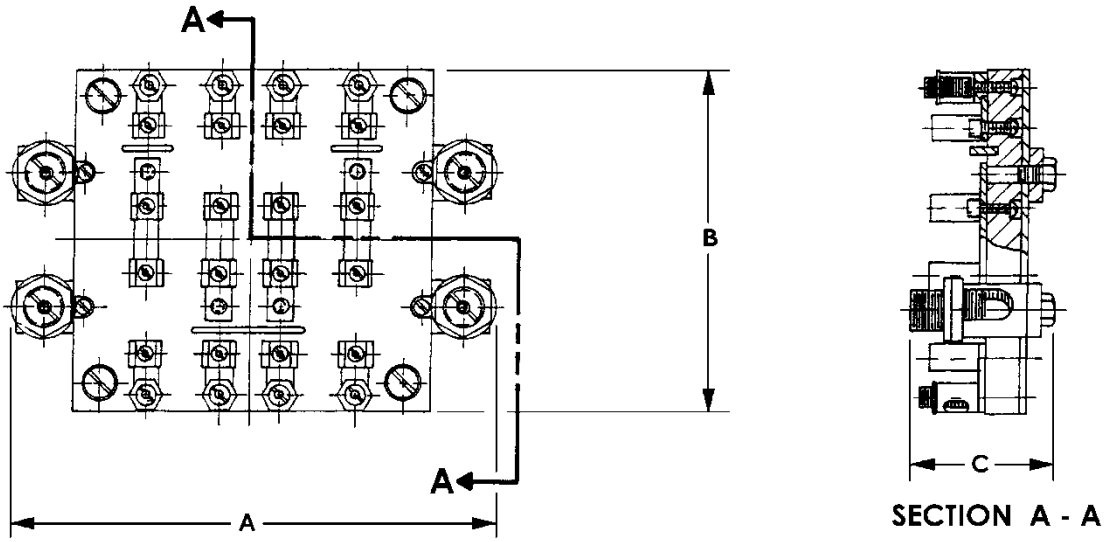


| Symbol no. | Dimensions (max) | | |
|---|---|---|---|
| | A | B | C |
| 555.1 | 6.50 | 6.38 | 2.80 |
| 556.1 | 9.00 | 6.38 | 2.80 |
| 557.1 | 11.87 | 6.38 | 2.80 |
| 558.1 | 14.63 | 6.38 | 2.80 |
| 559.1 | 20.25 | 6.38 | 2.80 |

FIGURE 4. Fuse block assembly, typical. Item No. 11, 12, 13, 14, 15
(Symbols 555.1, 556.1, 557.1, 558.1 and 559.1)

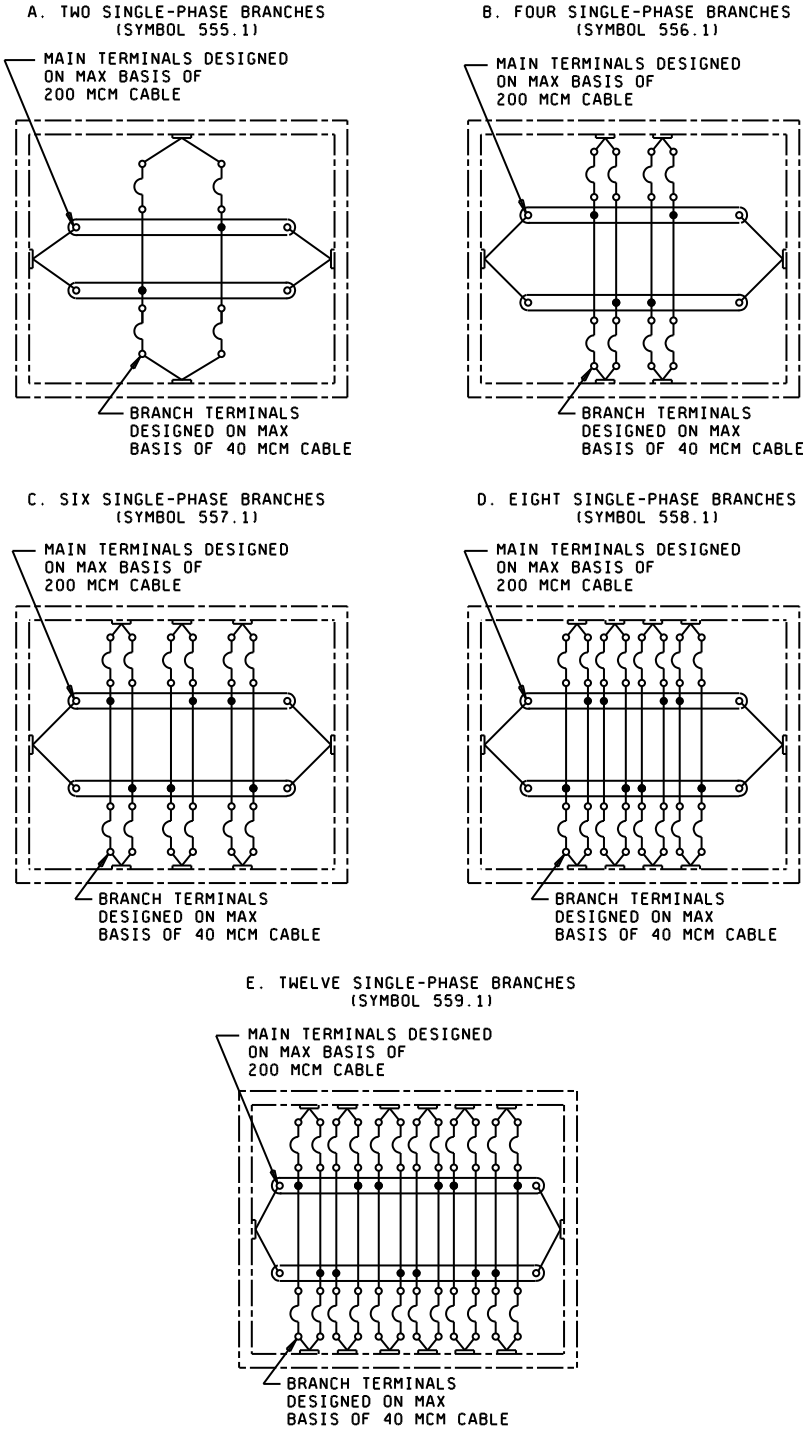


FIGURE 5. Wiring diagrams. 16, 17, 18, 19, 20

REQUIREMENTS

Symbol numbers: See table I.

Design:

Electrical rating: 250 volts alternating current, 0-30 ampere 60 hertz.
Dimensions and configuration: See figures 1, 2, 3 and 4.
Wiring diagrams: See figure 5.
Mounting dimensions: See figure 3.
Degree of enclosure: Submersible (15 feet).
Designation and marking: See MIL-DTL-24646.
Parts: The parts listed in table II and specified in MIL-DTL-24646 shall be used in the construction of the fuse boxes specified herein.

General information:
Military part numbers and general information are as specified in table I.

TABLE I. Military part numbers and general information.

| Military part no. | Symbol no. | Approx. Weight in pounds 1/ | No. of circuits | Feeder MCM | Branch MCM | Fuse size | Bus bar size | Supersedes | |
|---|---|---|---|---|---|---|---|---|---|
| | | | | | | | | Drawing no. | Type |
| M24646/9-001 | 555.1 | 20.5 | 2 | 200 | 40 | 0-30A | 1.00 x 0.25 | 9000-S-74165 | F-8A |
| M24646/9-002 | 556.1 | 26.2 | 4 | 200 | 40 | 0-30A | 1.00 x 0.25 | 9000-S-74166 | F-2A |
| M24646/9-003 | 557.1 | 31.0 | 6 | 200 | 40 | 0-30A | 1.00 x 0.25 | 9000-S-74167 | F-4A |
| M24646/9-004 | 558.1 | 35.0 | 8 | 200 | 40 | 0-30A | 1.00 x 0.25 | 9000-S-74168 | F-6A |
| M24646/9-005 | 559.1 | 54.8 | 12 | 200 | 40 | 0-30A | 1.00 x 0.25 | 9000-S-74169 | F-10A |

1/ The weight of these fuse boxes may vary + or - 15 percent.

TABLE II. Parts list.

| Item no. 1/ | Description | QTY M /- 001 | 002 | 003 | 004 | 005 | Material/ specification | Remarks |
|---|---|---|---|---|---|---|---|---|
| 01 | Fuse box assembly (sym 555.1) | - | | | | | MIL-DTL-24646/9 | See figure 1 |
| 02 | Fuse box assembly (sym 556.1) | | - | | | | MIL-DTL-24646/9 | See figure 1 |
| 03 | Fuse box assembly (sym 557.1 | | | - | | | MIL-DTL-24646/9 | See figure 1 |
| 04 | Fuse box assembly (sym 558.1) | | | | - | | MIL-DTL-24646/9 | See figure 1 |
| 05 | Fuse box assembly (sym 555.9) | | | | | - | MIL-DTL-24646/9 | See figure 1 |
| 06 2/ | Enclosure (10 x 10 x 3) | 1 | | | | | M24142/6-003 | See figure 2 Type A mod |
| 07 2/ | Enclosure (10 x 13 x 3) | | 1 | | | | M24142/6-004 | See figure 2 Type A mod |
| 08 2/ 3/ | Enclosure (10 x 16 x 3) (10 x 18 x 3) | | | 1 1 | | | M24142/6-005 M24142/6-006 | See figure 2 Type A mod |
| 09 2/ | Enclosure (10 x 18 x 3) | | | | 1 | | M24142/6-006 | See figure 2 Type A mod |
| 10 2/ | Enclosure (12 x 24 x 3) | | | | | 1 | M24142/6-010 | See figure 2 Type A mod |
| 11 | Fuse block assembly | 1 | | | | | MIL-DTL-24646/9 | See figure 4 |
| 12 | Fuse block assembly | | 1 | | | | MIL-DTL-24646/9 | See figure 4 |
| 13 | Fuse block assembly | | | 1 | | | MIL-DTL-24646/9 | See figure 4 |
| 14 | Fuse block assembly | | | | 1 | | MIL-DTL-24646/9 | See figure 4 |
| 15 | Fuse block assembly | | | | | 1 | MIL-DTL-24646/9 | See figure 4 |
| 16 | Wiring diagram | 1 | | | | | MIL-DTL-2036 | See figure 5 |
| 17 | Wiring diagram | | 1 | | | | MIL-DTL-2036 | See figure 5 |
| 18 | Wiring diagram | | | 1 | | | MIL-DTL-2036 | See figure 5 |
| 19 | Wiring diagram | | | | 1 | | MIL-DTL-2036 | See figure 5 |
| 20 | Wiring diagram | | | | | 1 | MIL-DTL-2036 | See figure 5 |
| 21 | Fuse clip (0-30A) | 8 | 16 | 24 | 32 | 48 | A-A-55507/1-06 | N/A |
| 22 | Identification plate | 1 | 1 | 1 | 1 | 1 | Brass, ASTM B36/B36M B121/B121M | N/A |
| 23 | Information plate | 2 | 4 | 6 | 8 | 12 | Brass, ASTM B36/B36M B121/B121M | N/A |

1/ Item numbers after the figure titles are the same as the item numbers shown in this table.

2/ Enclosure is same as MIL-E-24142/6, except for inside depth which is 3 inches instead of 5 inches shown.

3/ Enclosure M24142/6-006 may be used as an alternate. Mounting channel spacing will be maintained same as enclosure M24142/6-005.

Referenced documents. In addition to MIL-DTL-24646, this document references the following:

MIL-DTL-2036 MIL-E-24142/6 ASTM B36/B36M ASTM B121/B121M

The margins of this specification sheet are marked with vertical lines to indicate where changes from the previous issue were made. This was done as a convenience only and the Government assumes no liability whatsoever for any inaccuracies in these notations. Bidders and contractors are cautioned to evaluate the requirements of this document based on the entire content irrespective of the marginal notations and relationship to the last previous issue.

Custodian:
Navy - SH
DLA - CC

Preparing activity:
DLA - CC

(Project 5920-2015-006)

NOTE: the activities listed above were interested in this document as of the date of this document. Since organizations and responsibilities can change, you should verify the currency of the information above using the ASSIST Online database at https://assist.dla.mil.