INCH-POUND
MIL-DTL-24646/14C
29 January 2015
SUPERSEDING
MIL-DTL-24646/14B
29 October 2008

DETAIL SPECIFICATION SHEET

FUSE BOXES, FEEDER JUNCTION, TOTALLY ENCLOSED, 250 VOLTS, ALTERNATING CURRENT, THREE PHASE BUSES, SINGLE AND THREE PHASE BRANCHES, 0-30 AND 31-60 AMPERE FUSES, SYMBOLS 680 AND 681.1

This specification is approved for use by all Departments and Agencies of the Department of Defense.

The requirements for acquiring the product described herein shall consist of this specification sheet and MIL-DTL-24646.

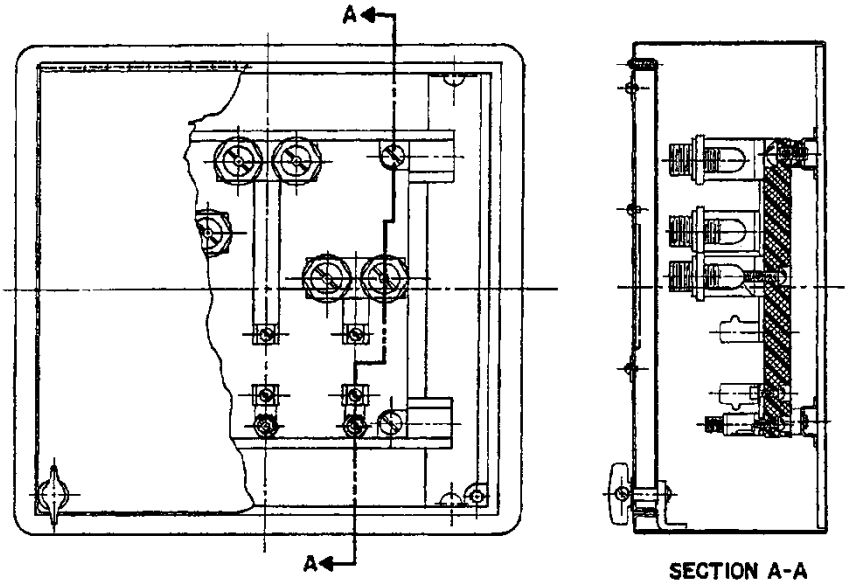

FIGURE 1. Fuse box assembly, typical. Item No. 01, 02
(Symbol 680 shown)

NOTES:
1. Dimensions are in inches.
2. Unless otherwise specified herein, tolerances shall be as follows:
   Two place decimals - plus or minus 0.02.
   Three place decimals - plus or minus 0.005.

AMSC N/A

FSC 5920

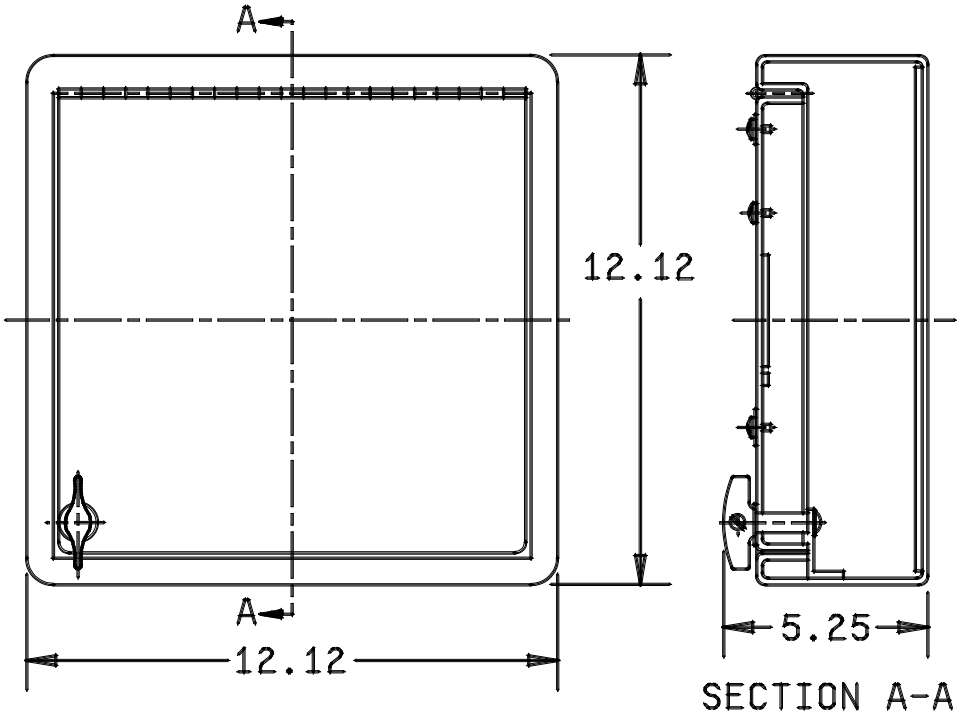

FIGURE 2. Enclosure, overall dimensions. Item No. 03, 04
(Symbols 680 and 681.1)

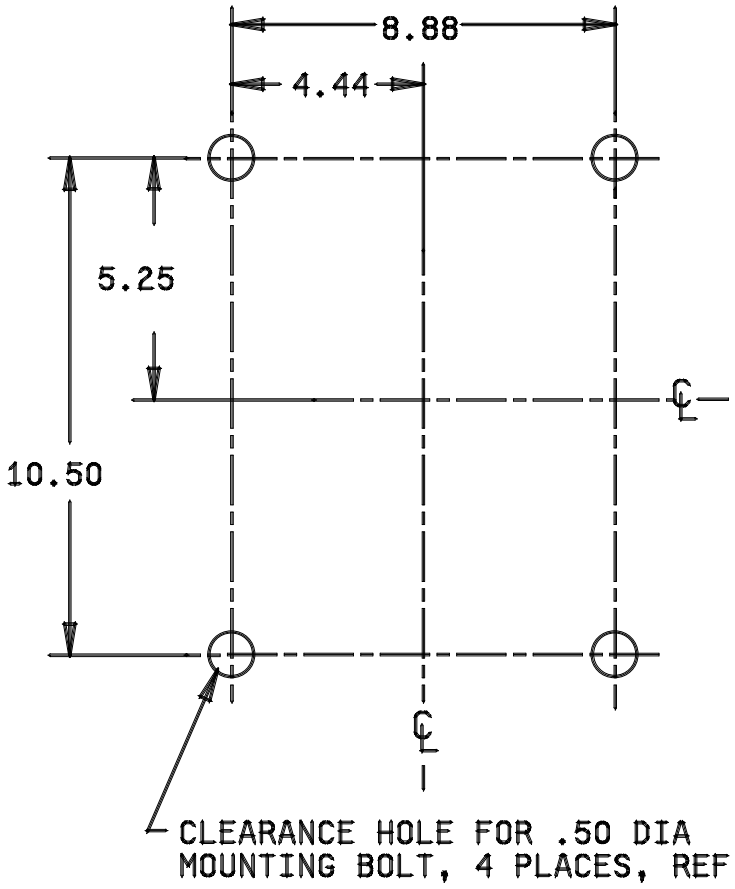

FIGURE 3. Mounting dimensions, ref.
(Symbols 680 and 681.1)

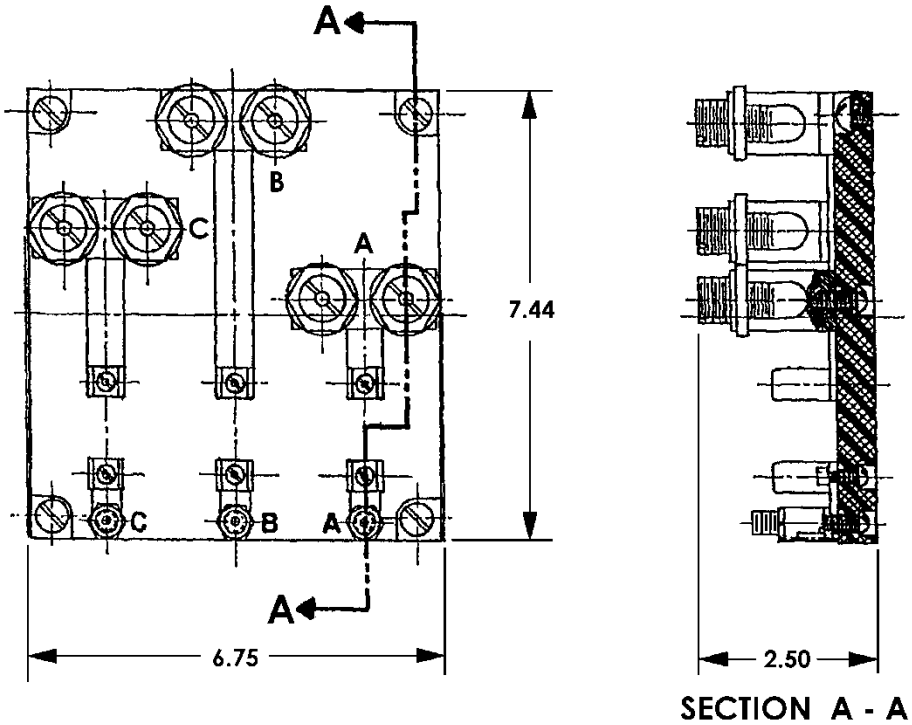

FIGURE 4. Fuse block assembly, typical. Item No. 05, 06
(Symbols 680 and 681.1)

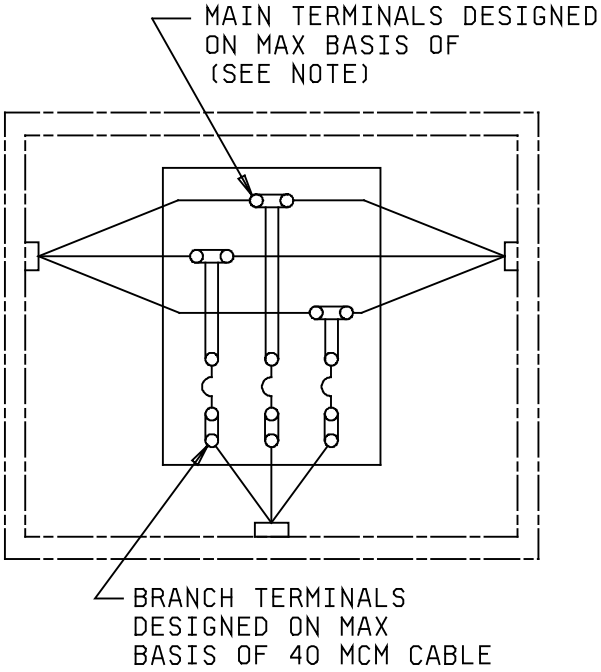

Note: MAIN TERMINALS
SYMBOL 680 200 MCM
SYMBOL 681.1 75 MCM

FIGURE 5. Wiring diagram. 07
(Symbols 680 and 681.1)

REQUIREMENTS

Symbol numbers: See table I.

Design:

Electrical rating: 250 volts alternating current, 0-30 ampere and 31-60 ampere, 60 hertz.
Dimensions and configuration: See figures 1, 2, 3 and 4.
Wiring diagrams: See figure 5.
Mounting dimensions: See figure 3.
Degree of enclosure: Totally enclosed.
Designation and marking: See MIL-DTL-24646.
Parts: The parts listed in table II and specified in MIL-DTL-24646 shall be used in the construction of the fuse boxes specified herein.

General information:
Military part numbers and general information are as specified in table I.

TABLE I. Military part numbers and general information.

Military part no.	Symbol no.	Approx. Weight in pounds 1/	No. of circuits	Feeder MCM	Branch MCM	Fuse size	Bus bar size	Supersedes	
								Drawing no.	Type
M24646/14-001	680	19.0	1	200	40	0-30A	0.75 x 0.12	9-S-4688-L	JJ-5
M24646/14-002	681.1	18.75	1	75	40	31-60A	0.75 x 0.12	9-S-4740-L	N/A

1/ The weight of these fuse boxes may vary + or - 15 percent.

TABLE II. Parts list.

Item no. 1/	Description	QTY M /-		Material/ specification	Remarks
		001	002		
01	Fuse box assembly (sym 680)	-		MIL-DTL-24646/14	See figure 1
02	Fuse box assembly (sym 681.1		-	MIL-DTL-24646/14	See figure 1
03	Enclosure (12 x 12 x 4.5)	1		M24142/14-003 MOD "C" TO 4.5 inches	See figure 2 Type E mod
04	Enclosure (12 x 12 x 4)		1	M24142/14-003 MOD "C" to 4.0 inches	See figure 2 Type E mod
05	Fuse block assembly	1		MIL-DTL-24646/14	See figure 4
06	Fuse block assembly		1	MIL-DTL-24646/14	See figure 4
07	Wiring diagram	1	1	MIL-DTL-2036	See figure 5
08	Fuse clip (0-30A)	6	-	A-A-55507/1-06	N/A
09	Fuse clip (31-60A)	-	6	A-A-55507/1-08	N/A
10	Main terminal assembly	6	6	NAVSEA/SHIPS 9000-S-6202-73246	N/A
11	Identification plate	1	1	Brass, ASTM B36/B36M B121/B121M	N/A
12	Information plate	1	1	Brass, ASTM B36/B36M B121/B121M	N/A

1/ Item numbers after the figure titles are the same as the item numbers shown in this table.

Referenced documents. In addition to MIL-DTL-24646, this document references the following:

MIL-DTL-2036 ASTM B36/B36M ASTM B121/B121M

The margins of this specification sheet are marked with vertical lines to indicate where changes from the previous issue were made. This was done as a convenience only and the Government assumes no liability whatsoever for any inaccuracies in these notations. Bidders and contractors are cautioned to evaluate the requirements of this document based on the entire content irrespective of the marginal notations and relationship to the last previous issue.

Custodian:
Navy - SH
DLA - CC

Preparing activity:
DLA - CC

(Project 5920-2015-009)

NOTE: the activities listed above were interested in this document as of the date of this document. Since organizations and responsibilities can change, you should verify the currency of the information above using the ASSIST Online database at https://assist.dla.mil.