INCH-POUND
MIL-DTL-24646/11C
29 January 2015
SUPERSEDING
MIL-DTL-24646/11B
29 October 2008

DETAIL SPECIFICATION SHEET

FUSE BOXES, FEEDER DISTRIBUTION, WITH SWITCHES, WATERTIGHT (3 FEET), 125 VOLTS, ALTERNATING CURRENT, SINGLE AND THREE PHASE BUSES, SINGLE AND DOUBLE FEEDERS, SINGLE PHASE BRANCHES, 0-30 AMPERE MIDGET FUSES, AND SNAP SWITCHES, SYMBOLS 645, 645.1, 649.1 AND 650.1

This specification is approved for use by all Departments and Agencies of the Department of Defense.

The requirements for acquiring the product described herein shall consist of this specification sheet and MIL-DTL-24646.

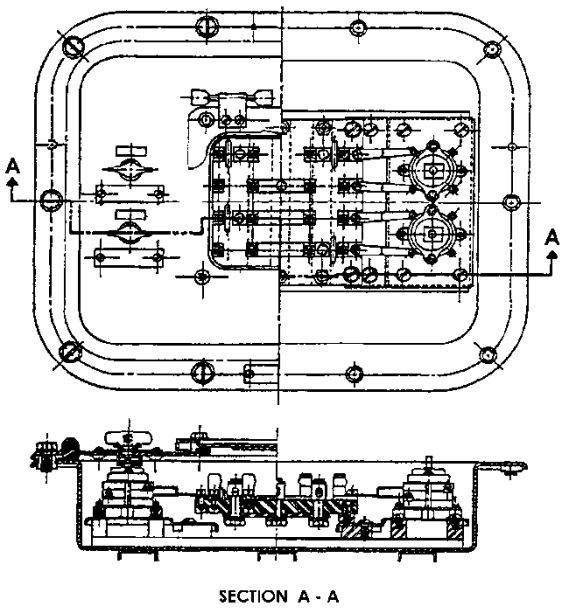

FIGURE 1. Fuse box assembly, typical. Item No. 01, 02, 03, 04
(Symbol 649.1 shown)

NOTES:
1. Dimensions are in inches.
2. Unless otherwise specified herein, tolerances shall be as follows:
   Two place decimals - plus or minus 0.02.
   Three place decimals - plus or minus 0.005.

AMSC N/A
FSC 5920

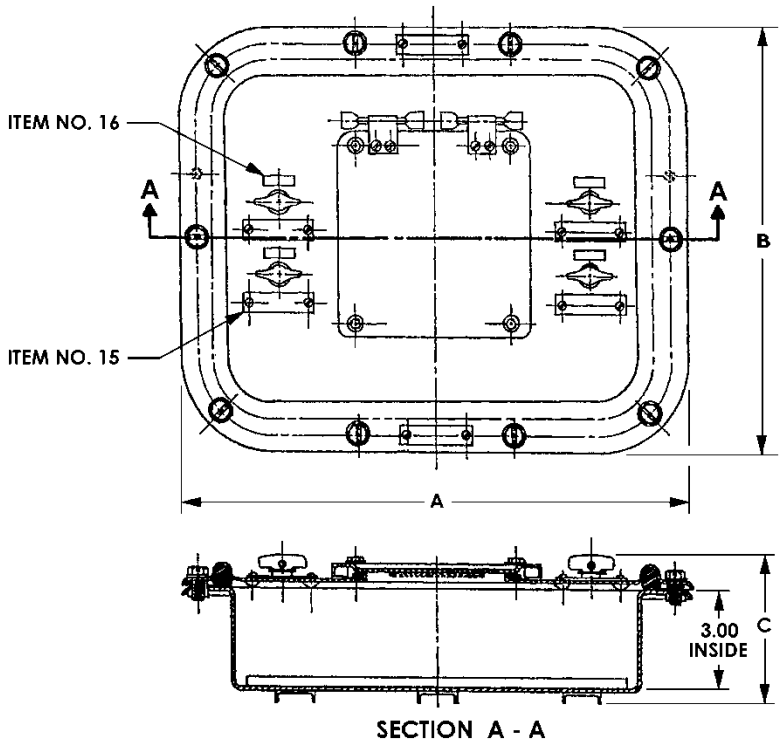

SYMBOL NO	DIMENSIONS (REF)		
	A	B	C
645	16.38	13.38	4.62
645.1	16.38	13.38	4.62
649.1	16.38	13.38	4.62
650.1	16.38	15.38	4.62

FIGURE 2. Enclosure, overall dimensions. Item No. 05, 06, 07
(Symbols 645, 645.1, 649.1, and 650.1)

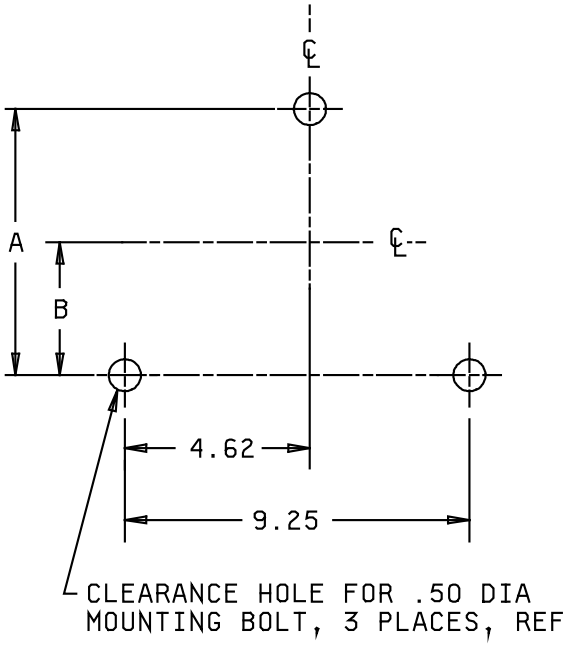

SYMBOL NO	DIMENSIONS	
	A	B
645	11.44	5.72
645.1	11.44	5.72
649.1	11.44	5.72
650.1	13.44	6.72

FIGURE 3. Mounting dimensions, ref.
(Symbols 645, 645.1, 649.1, 650.1)

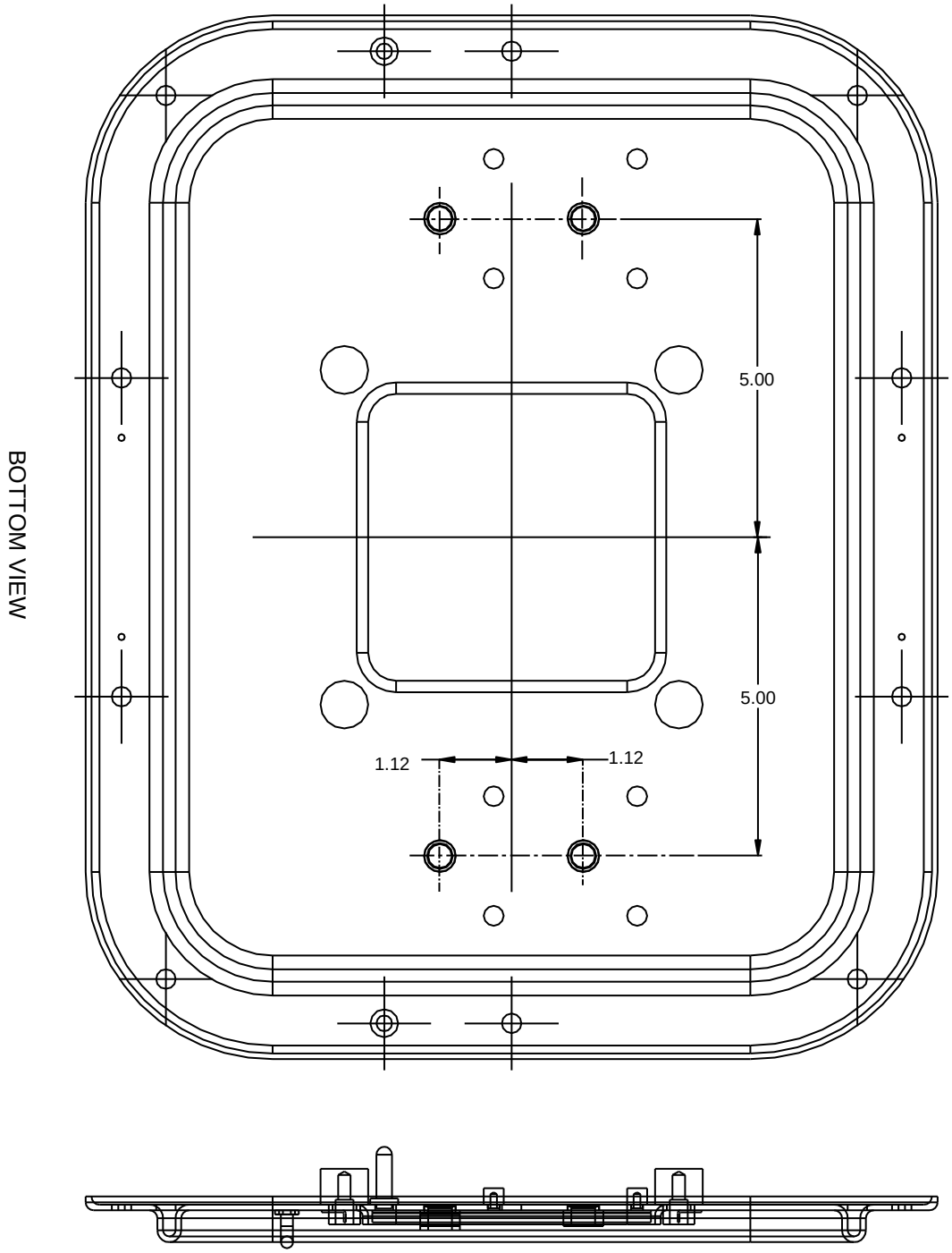

FIGURE 4. Cover assembly, typical.
(Symbols 645, 645.1, 649.1, and 650.1)

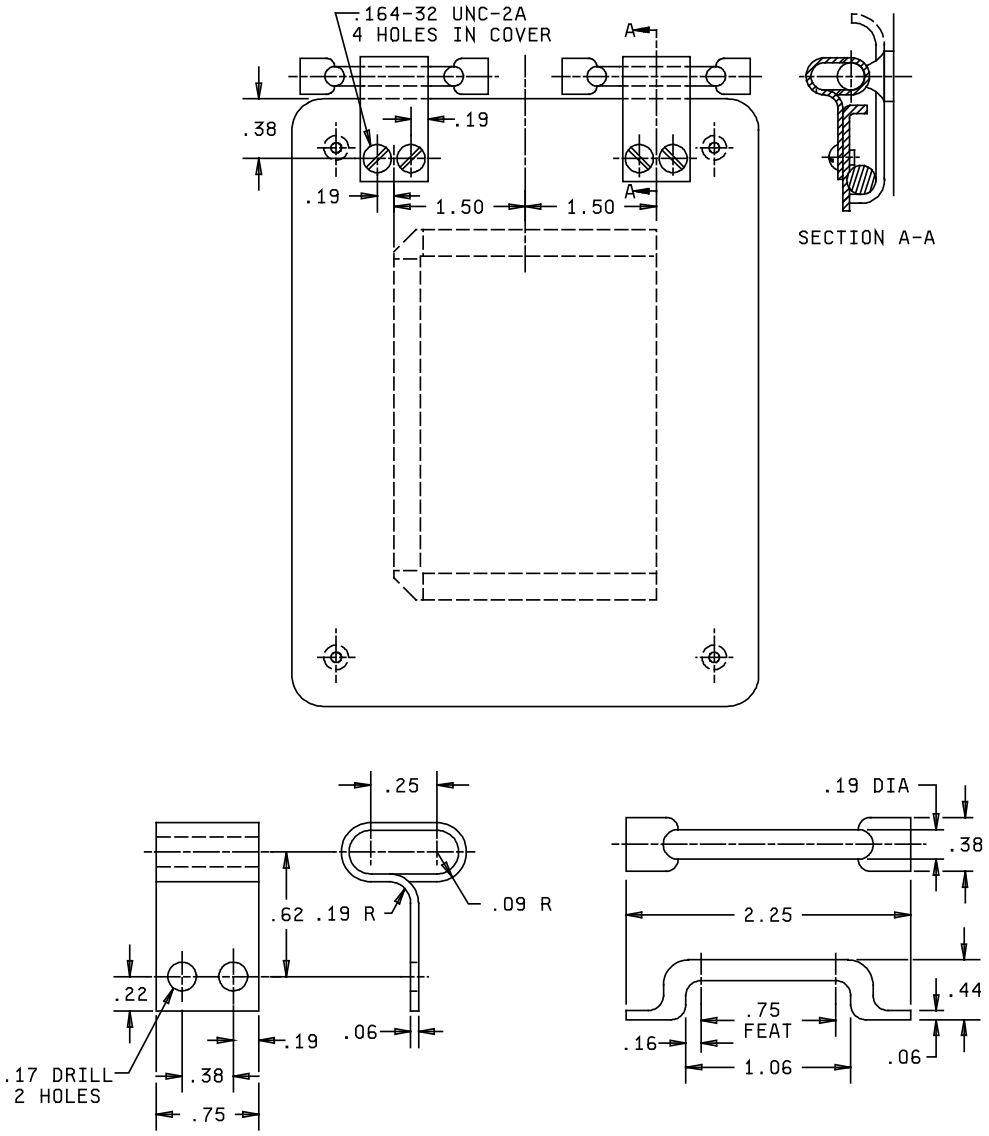

FIGURE 5. Fuse cover assembly, typical.
(Symbols 645, 645.1, 649.1 and 650.1)

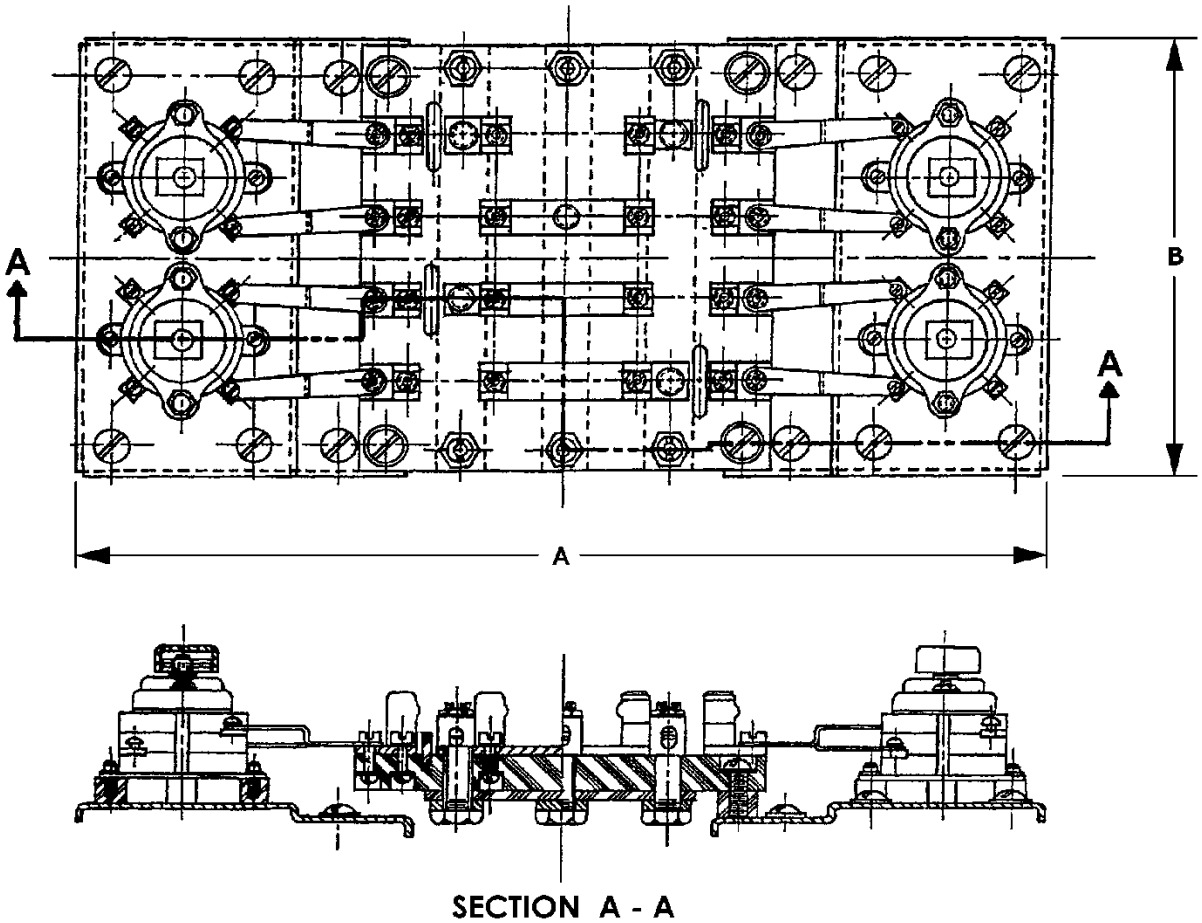

SYMBOL NO	DIMENSIONS (MAX)	
	A	B
645.	12.75	5.88
645.1	12.75	5.88
649.1	12.75	5.88
650.1	12.75	10.75

FIGURE 6. Fuse block assembly, typical. Item No. 09, 10, 11, 12
(Symbols 645, 645.1, 649.1 and 650.1)

A. Four single-phase branches, single feeder (Symbol 645)

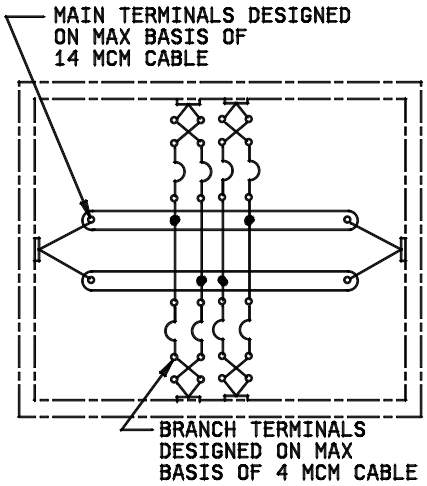

B. Four single-phase branches, Double feeder (Symbol 645.1)

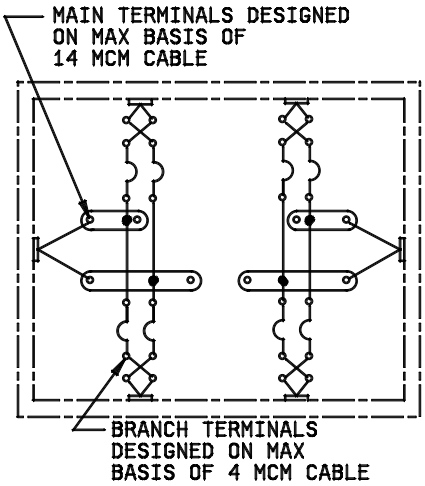

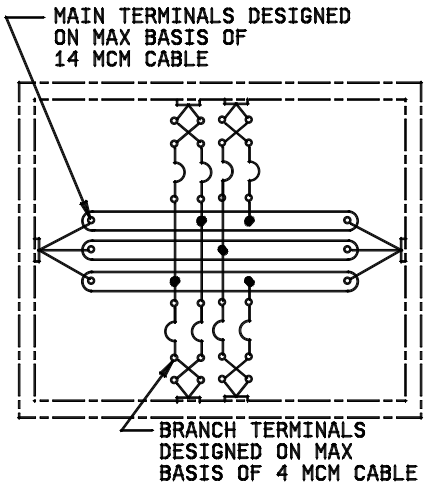

C. Four single-phase branches (Symbol 649.1)

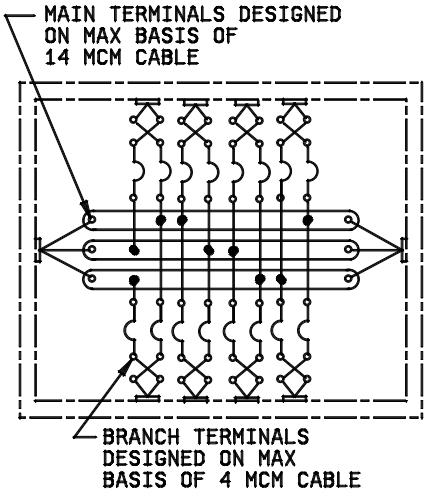

D Eight single-phase branches (Symbol 650.1)

FIGURE 7. Wiring diagrams. Item No. 09, 10, 11, 12

REQUIREMENTS

Symbol numbers: See table I.

Design:

Electrical rating: 125 volts alternating current, 0-10 ampere, 60 hertz.
Dimensions and configuration: See figures 1, 2, 3, 4, 5 and 6.
Wiring diagrams: See figure 7.
Mounting dimensions: See figure 3.
Degree of enclosure: Watertight (3 feet).
Nonmagnetic enclosure: Nonmagnetic enclosures shall be brass in accordance with MIL-E-24142. Attaching hardware shall be nonmagnetic and shall have a magnetic permeability not greater than 2.0.
Designation and marking: See MIL-DTL-24646.
Parts: The parts listed in table II and specified in MIL-DTL-24646 shall be used in the construction of the fuse boxes specified herein.

General information:
Military part numbers and general information is as specified in table I.

TABLE I. Military part numbers and general information.

Military part no.	Symbol no.	Approx. Symbol no. 1/	No. of circuits	Feeder MCM	Branch MCM	Fuse size	Bus bar size	Supersedes	
								Drawing no.	Type
M24646/11-001	645	26.8	4	14	4	midget 0-30A	0.62 x 0.12	9-S-74196	18-A
M24646/11-002	645.1	26.8	4	14	4	midget 0-30A	0.62 x 0.12	9-S-74196	18-B
M24646/11-003	649.1	29.0	4	14	4	midget 0-30A	0.62 x 0.12	9-S-74197	D-12A
M24646/11-004	650.1	36.2	8	14	4	midget 0-30A	0.62 x 0.12	9-S-74201	22-A

1/ The weight of these fuse boxes may vary + or - 15 percent.

TABLE II. Parts list.

Item no. 1/	Description	QTY M /- 001	002	003	004	Material/ specification	Remarks
01	Fuse box assembly (sym 645)	-				MIL-DTL-24646/11	See figure 1
02	Fuse box assembly (sym 645.1)		-			MIL-DTL-24646/11	See figure 1
03	Fuse box assembly (sym 649.1			-		MIL-DTL-24646/11	See figure 1
04	Fuse box assembly (sym 650.1)				-	MIL-DTL-24646/11	See figure 1
05 2/	Enclosure (10 x 13 x 3)	1	1	1		4/ M24142/6-004	See figures 2 and 4
06 2/	Enclosure (12 x 13 x 3)				1	4/ M24142/6-008	See figures 2 and 4
07	Fuse cover assembly	1	1	1	1	MIL-DTL-24646/11	See figure 5
08	Wiring diagram	1				MIL-DTL-2036	See figure 7
09	Wiring diagram		1			MIL-DTL-2036	See figure 7
10	Wiring diagram			1		MIL-DTL-2036	See figure 7
11	Wiring diagram				1	MIL-DTL-2036	See figure 7
12	Fuse clip (midget 30A)	16	16	16	32	A-A-55507/1-04	N/A
13	Snap switch	4	4	4	8	M15291/3-002	N/A
14	Identification plate	1	1	1	1	Brass, ASTM B36/B36M B121/B121M	N/A
15	Information plate	4	4	4	8	Brass, ASTM B36/B36M B121/B121M	See figure 2
16	Switch information plate 3/	4	4	4	8	Brass, ASTM B36/B36M B121/B121M	See figure 2

1/ Item numbers after the figure titles are the same as the item numbers shown in this table.

2/ Enclosure is same as MIL-E-24142/6, except for inside depth which is 3 inches instead of 5 inches shown.

3/ As an option, the switch information ("OFF") may be metal stamped onto the covers, in lieu of being placed on an information plate.

4/ Enclosures shall be furnished with flat cover.

Referenced documents. In addition to MIL-DTL-24646, this document references the following:

MIL-DTL-2036 MIL-E-24142 MIL-E-24142/6 ASTM B36/B36M ASTM B121/B121M

The margins of this specification sheet are marked with vertical lines to indicate where changes from the previous issue were made. This was done as a convenience only and the Government assumes no liability whatsoever for any inaccuracies in these notations. Bidders and contractors are cautioned to evaluate the requirements of this document based on the entire content irrespective of the marginal notations and relationship to the last previous issue.

Custodian:
Navy - SH
DLA - CC

Preparing activity:
DLA - CC

(Project 5920-2015-008)

NOTE: the activities listed above were interested in this document as of the date of this document. Since organizations and responsibilities can change, you should verify the currency of the information above using the ASSIST Online database at https://assist.dla.mil.