INCH-POUND
MIL-DTL-24317B
1 September 2010
SUPERSEDING
MIL-DTL-24317A
23 June 2004

DETAIL SPECIFICATION

SWITCHES, MULTISTATION, PUSHBUTTON, ILLUMINATED AND NON-ILLUMINATED), GENERAL SPECIFICATION FOR

Inactive for new design after 8 March 1999

This specification is approved for use by all Departments and Agencies of the Department of Defense.

1. SCOPE

1.1 Scope. This specification covers the general requirements for manually operated illuminated and non-illuminated multistation, pushbutton switches for use in electronics and communications equipment.

1.2 Classification.

1.2.1 Type designation. The type designation is in the following form and as specified (see 6.2):

SM02	L	1
Style (1.2.1.1)	Indication (1.2.1.2)	Enclosure design (1.2.1.3)

1.2.1.1 Style. The switch style is identified by a two letter symbol “SM” followed by a two-digit number which specifies the design and configuration covered by a single specification sheet.

1.2.1.2 Indication characteristic. Switches are designed by a single letter in accordance with table I.

TABLE I. Indication characteristic.

Symbol	Indication characteristic
L	Illuminated
D	Non-illuminated

Comments, suggestions or questions on this document should be addressed to DLA Land and Maritime, ATTN: VAT, Post Office Box 3990, Columbus, OH 43218-3990, or emailed to switch@dla.mil. Since contact information can change, you may want to verify the currency of this address information using the ASSIST Online database at https://assist.daps.dla.mil/.

1.2.1.3 Enclosure design. The enclosure design is identified by a single digit in accordance with table II.

TABLE II. Enclosure design.

Symbol	Seal
1	Unsealed
2	Dripproof
3	Watertight

2. APPLICABLE DOCUMENTS

2.1 General. The documents listed in this section are specified in sections 3 and 4 of this specification. This section does not include documents cited in other sections of this specification or recommended for additional information or as examples. While every effort has been made to ensure the completeness of this list, document users are cautioned that they must meet all specified requirements of documents cited in sections 3 and 4 of this specification, whether or not they are listed.

2.2 Government documents.

2.2.1 Specifications, standards, and handbooks. The following specifications, standards, and handbooks form a part of this document to the extent specified herein. Unless otherwise specified, the issues of these documents are those cited in the solicitation or contract.

FEDERAL

SPECIFICATIONS

L-P-410 - Plastic, Polyamide (Nylon), Rigid: Rods, Tubes, Flats, Molded and Cast Parts.

STANDARDS

FED-STD-H28 - Screw-Thread Standards for Federal Services

COMMERCIAL ITEM DESCRIPTIONS (CIDS)

A-A-59588 - Rubber, Silicone

DEPARTMENT OF DEFENSE

SPECIFICATIONS

MIL-DTL-5541 - Chemical Conversion Coatings on Aluminum and Aluminum Alloys.
MIL-A-8625 - Anodic Coatings, For Aluminum and Aluminum Alloys.
MIL-DTL-6363/6 - Lamps, Incandescent, Aircraft Service Single Contact Submidget Flanged Base T-1 Bulb
MIL-DTL-6363/8 - Lamps, Incandescent, Aircraft Service Single Contact Midget Flanged Base T-1-3/4 Bulb

STANDARDS

MIL-STD-108	-	Definitions of and Basic Requirements for Enclosures for Electric and Electronic Equipment.
MIL-STD-130	-	Identification Marking of US Military Property.
MIL-STD-202	-	Test Methods for Electronic and Electrical Component Parts.
MIL-STD-1285	-	Marking of Electrical and Electronic Parts
MIL-STD-2073-1	-	DOD Standard Practice for Military Packaging

(Copies of these documents are available online at https://assist.daps.dla.mil/quicksearch or from the Standardization Document Order Desk, 700 Robbins Avenue, Building 4D, Philadelphia, PA 19111-5094.)

2.3 Non-Government publications. The following documents form a part of this document to the extent specified herein. Unless otherwise specified, the issues of these documents are those cited in the solicitation or contract.

AMERICAN NATIONAL STANDARDS INSTITUTE (ANSI)

ANSI/NCSL-Z540.3	-	Calibration Laboratories and Measuring and Test Equipment-General Requirements.

(Application for copies can be found online at http://www.ansi.org/ or 25 West 43rd Street, New York, NY 10036-8002, telephone 212-642-4900, fax 212-302-1286)

AMERICAN SOCIETY OF MECHANICAL ENGINEERS (ASME)

ASME-Y14.38	-	Abbreviations and Acronyms

(Copies of these documents are available online at www.asme.org or from the American Society of Mechanical Engineers (ASME), Three Park Avenue, New York, New York, 10016-5990

AMERICAN SOCIETY FOR TESTING AND MATERIAL (ASTM)

ASTM-D635	-	Plastics in a Horizontal Position, Rate of Burning and / or Extent and Time of Burning of
ASTM-D4066	-	Nylon, Injection and Extrusion Materials (PA)
ASTM-D5948	-	Compounds, Molding, Thermosetting

(Copies of these documents are available online at www.astm.org or from the American Society for Testing and Materials, 100 Barr Harbor Drive, West Conshohocken, Pennsylvania, 19428-2959.)

INTERNATIONAL ORGINATIONS FOR STANDARDS (ISO)

ISO 10012-1	-	Quality Assurance Requirements for Measuring Equipment - Part 1: Metrological Confirmation System for Measuring Equipment.

(Application for copies can be found online at http://www.ansi.org or should be addressed to the American National Standards Institute (ANSI), 25 West 43rd Street, New York, NY 10036-8002, telephone 212-642-4900, fax 212-302-1286).

SOCIETY OF AUTOMOTIVE ENGINEERS

SAE-AS50881 - Wiring, Aerospace Vehicle

(Copies of these documents are available online at www.sae.org or from Society of Automotive Engineers, 400 Commonwealth Drive, Warrendale, Pennsylvania, 15096-0001)

2.4 Order of precedence. Unless otherwise noted herein or in the contract, in the event of a conflict between the text of this document and the references cited herein (except for related specification sheets), the text of this document takes precedence. Nothing in this document, however, supersedes applicable laws and regulations unless a specific exemption has been obtained.

3. REQUIREMENTS

3.1 Detail requirements for individual styles of switches. Detail requirements or exceptions applicable to individual styles of switches shall be as specified in the applicable complementary document (e.g. specification sheet, drawings, or other document). In the event of any conflict between requirements of this specification and the complementary documents, the latter shall govern (see 6.2).

3.2 Qualification and preproduction.

3.2.1 Qualification. Switches furnished under this specification and covered by specification sheets, shall be products that are qualified for listing on the applicable qualified products before contract award (see 4.5 and 6.3.1).

3.2.2 Preproduction. Switches furnished under this specification and not covered by specification sheets shall be products which have passed the preproduction inspection specified in 4.6. This preproduction inspection shall be performed after award of contract and prior to production (see 6.3.2).

3.3 Material. Material shall be as specified herein. However, when a definite material is not specified, a material shall be used which will enable the switches to meet the performance requirements of this specification. Acceptance or approval of any constituent material shall not be construed as a guaranty of the acceptance of the finished product.

3.3.1 Metals. All metal parts, other than current-carrying parts shall be of corrosion-resistant material, or shall be suitably plated to resist corrosion.

3.3.1.1 Ferrous metals. Ferrous material shall not be used for current-carrying parts except for feed-through terminals in headers.

3.3.1.2 Dissimilar metals. When dissimilar metals are used in intimate contact with each other, protection against electrolysis and corrosion shall be provided. The use of dissimilar metals in contact, which tend toward active electrolytic corrosion (particularly brass, copper, or steel used in contact with aluminum or aluminum alloy) is not acceptable. However, metal plating or metal spraying of dissimilar base metals to provide similar or suitable abutting surfaces is permitted. The use of dissimilar metals separated by a suitable insulating material is also permitted.

3.3.2 Plastics.

3.3.2.1 Thermosetting. Unless otherwise specified (see 3.1), thermosetting plastics shall be in accordance with ASTM-D5948; however, cotton or wood-flour-filled materials shall not be used.

3.3.2.2 Thermoplastics. Thermoplastics shall not be used for major structural parts, that is, switch housing, terminal header and assembly frame. When used for other parts, the thermoplastic material shall be in accordance with ASTM-D4066 or L-P-410, or shall be of a high temperature polycarbonate material which is self-extinguishing when tested in accordance with ASTM-D635.

3.3.3 Rubber. All rubber shall be in accordance with A-A-59588.

3.3.4 Finish. Unless otherwise specified (see 3.1), all external aluminum parts shall be anodized in accordance with MIL-A-8625 and all internal aluminum parts shall be chemically treated in accordance with MIL-DTL-5541. Unless otherwise specified (see 3.1), bezels, mounting flanges, barriers, mounting bushings and associated mounting hardware that are designed to be exposed at the front of the panel after assembly shall have a black lusterless finish.

3.5 Pure tin. The use of pure tin, as an underplate or final finish, is prohibited both internally and externally. Tin content of switch components and solder shall not exceed 97 percent, by mass. Tin shall be alloyed with a minimum of 3 percent lead, by mass (see 6.5)

3.4 Design and construction. Switches covered by this specification shall be of the design, construction, and physical dimensions specified (see 3.1).

3.4.1 Terminals. Unless otherwise specified (see 3.1), terminals shall be of the solder-lug type and shall be designed so that the wires can be mechanically secured prior to soldering. Terminals shall be solder coated; electroplated tin, or gold plated. When electroplated, the coating shall be 0.0002 inch minimum thickness, over a copper undercoat of 0.0002 inch minimum thickness. For gold-plating, the coating shall be 0.00005 inch minimum thickness over a copper undercoat of 0.0001 inch minimum thickness.

3.4.1.1 Identification of terminals. Terminals shall be identified to indicate the contact arrangement of the switch or lamp circuit, as applicable (see 3.1). When specified (see 3.1), terminal identification shall be sugmented by a circuit schematic. There shall be no overmarking of terminals.

3.4.2 Plunger. The operating plunger shall be insulated from all current-carrying parts.

3.4.3 Switch housing (when applicable, see 3.1). The switch housing shall be as specified.

3.4.4 Switch functions. A multistation, pushbutton switch shall incorporate two or more pushbutton stations on a common frame. The following functions may be provided (see 6.2):

3.4.4.1 Independent. There shall be no mechanical linkage. Individual pushbutton stations shall have independent functions.

3.4.4.2 Momentary interlocking. Each pushbutton station shall have momentary action, and only one button shall be depressed to actuation at one time.

3.4.4.3 Locking with master release. Each pushbutton station shall lock down when depressed and shall release by depressing a special momentary release station. One or more pushbuttons may be depressed at one time, but all shall release simultaneously.

3.4.4.4 Locking with remote release. Each pushbutton station shall lock down when depressed and shall release by energizing an electromagnetic device incorporated into the pushbutton switch. One or more pushbuttons may be depressed at one time but all shall release simultaneously.

3.4.4.5 Locking and interlocking. Each pushbutton station shall lock down when depressed and shall release by depressing any other button. Only one pushbutton shall be depressed to actuation at one time.

3.4.4.6 Independent locking and interlocking. Each pushbutton station shall lock down when depressed and shall release only by pushing it again. Only one pushbutton may be depressed at one time.

3.4.4.7 Locking and interlocking with remote release. Each pushbutton station shall lock down when depressed and shall release by depressing a special momentary release station. Only one pushbutton may be depressed at a time.

3.4.4.8 Locking and interlocking with remote release. Each pushbutton station shall lock down when depressed and shall release by energizing an electromagnetic device. Only one pushbutton may be depressed at a time.

3.4.4.9 Remote release and lockout. The energizing of an electromagnetic device shall release all stations and then shall prevent actuation of any station until the electromagnetic device is deenergized.

3.4.4.10 Tease-proof. One pushbutton station in a multistation switch shall always be in a down position with its associated circuitry activated. Depressing any other pushbutton station shall not cause deactuation of activated circuits until pushbutton station being depressed is positively committed to activating its associated circuitry.

3.4.5 Circuit characteristic (when applicable, see 3.1). Switch station circuitry shall be as specified.

3.4.6 Lamps (when applicable, see 3.1).

3.4.6.1 Circuitry. The lamp circuit shall be independent of the switch circuit and shall be insulated from the switch housing.

3.4.6.2 Replacement. The lamps shall be replaceable from the front of the panel with the complete assembly mounted in the panel. Unless otherwise specified (see 3.1), tools shall not be required to replace the lamp.

3.4.6.3 Contact and springs. Lamp contacts shall be of a copper base alloy and shall be suitably plated. Lamp contact springs shall be beryllium copper, suitably plated, or shall be corrosion resistant steel. When the contact and contact spring are combined in an integral part (one piece of metal), copper beryllium alloy, suitably plated, shall be used.

3.4.6.4 Type. Unless otherwise specified (see 3.1), switches shall accept type T-1-3/4 midget flange-base lamps.

3.4.6.5 Failure. Lamp failure shall not be considered a unit failure if, when the lamp failure is noted, a new lamp is installed immediately and the lamp functions. The test being performed shall then be continued as required.

3.4.7 Lens (when applicable, see 3.1). The lens design shall be as specified and shall permit the application of legends, when applicable, (see 6.2). Abbreviations on the legends shall be in accordance with ASME-Y14.38. The lens, excluding the switch housing mating portion, shall be of heat resistant thermoplastic material, or thermosetting plastic as specified (see 3.1). The lens shall be removable from the front of the panel. The lens shall not rotate or loosen during the applicable tests. The lens shall be free from defects which will prevent it from meeting luminous distribution and color requirements. Threaded plastic lens shall not be used (see 3.4.12).

3.4.7.1 Snap-in type. Snap-in lens shall be designed to have a lens removal force between 2 and 4 pounds, and after 50 insertions and withdrawals, the lens removal force shall not have varied over 50 percent from the measured initial lens removal force. Snap-in lens shall not be used for push-pull operative switches.

3.4.7.2 Color. The lens color shall be as specified (see 3.1) and shall be evenly distributed over the lens face. Unless otherwise specified (see 3.1), the lens color shall be in accordance with table III.

3.4.7.3 Luminance. The measured photometric brightness in foot lambert shall be as specified (see 3.1). Tests shall be made under dark conditions, using lamps with a 0.34 ± .02 mean spherical candlepower. An average of three readings shall be made across the face of the lens, when unit is illuminated.

3.4.8 Color filters (when applicable, see 3.1). The color of color filters shall be in accordance with table III and shall be of one of the following types:

3.4.8.1 Cap filters. Cap filters used to convert clear incandescent lamps to colored lamps shall be as specified (see 3.1).

3.4.8.2 Lens assembly filters. The design, material, and thickness of filters used in lens assemblies (behind lens and diffuser plates) shall be as specified (see 3.1).

TABLE III. Chromatically limits for illuminated colors.

Colors	Chromaticity limits 2100° Kelvin 1/	
	x	y
Green	.195 .286 .234 .143	.713 .637 .575 .650
Yellow	.530 .544 .571 .584	.442 SL2/ .402 SL2/
Amber	.596 .607 .625 .636	.380 SL2/ .351 SL2/
Red	.655 .667 .690 .702	.324 SL2/ .287 SL2/
Blue	.194 .240 .184 .135	.254 .213 .147 .187
White	y is not less than .400 x is not greater than .410 $y-y_o$ is not numerically greater than 0.03 x (y_o is the y coordinate of the Planckian radiator for a given x)	

1/ The chromaticities of the diffusing lenses or colored filters expressed as x and y coordinates on the CIE chromaticity diagram shall lie within areas bounded by the coordinates listed for each color, using source illuminate of 2100°K.

2/ SL-Spectrum Locus (where intersected by other of coordinate pair).

3.4.9 Mounting and spacer barriers (when applicable, see 3.1). Mounting and spacer barriers, shall be of the design and color specified.

3.4.10 Panel seals (when applicable, see 3.1). Unless otherwise specified, panel seals shall be fabricated from silicon rubber conforming to class III of A-A-59588 and shall be of the design, and grade as specified.

3.4.11 Switch contacts. Unless otherwise specified (see 3.1), the switch contacting surfaces shall be of a silver or silver alloy material.

3.4.12 Screw threads. Screw threads on externally threaded parts, or parts subject to replacement or removal shall be in accordance with FED-STD-H28. Threading of nonmetallic parts shall not be permitted.

3.4.13 Attitude. Unless otherwise specified (see 3.1), switches shall be so constructed as to insure proper operation when mounted in any position.

3.5 Solderability. When switches are tested as specified in 4.8.2, 95 percent of the total length of fillet, which is between the standard wrap wire and the terminal, shall be tangent to the surface of the terminal being tested. There shall be no pinholes, or voids. A ragged or interrupted line at the point of tangency between the fillet and the terminal under test shall be considered a defect. After the test there shall be no evidence of fracture, loosening of parts, or any other mechanical failure of the switches.

3.6 Switch actuation and circuit configuration. When switches are tested as specified in 4.8.3, the switch-circuit configuration shall conform to the specified diagram (see 6.2). Switches shall make and break the required circuits in all positions. The making and breaking of circuits shall be positive. The switches shall function as specified (see 3.4.4 and 6.2).

3.7 Contact resistance

3.7.1 Switch terminals. When measured as specified in 4.8.4.1, the resistance across the switch terminals shall not exceed 25 milliohms, unless otherwise specified (see 3.1).

3.7.2 Lamp terminals (when applicable, see 3.1). When measured as specified in 4.8.4.2, the resistance across the lamp terminals shall not exceed 1.0 ohm.

3.8 Simultaneity. When switches are tested as specified in 4.8.5, the make and break of contacts associated with any one station shall be simultaneous to within 25 milliseconds (ms).

3.9 Thermal shock. When switches are tested as specified in 4.8.6, there shall be no mechanical or electrical damage. There shall be no discoloration or deformation of the lens.

3.10 Vibration, high frequency. Unless otherwise specified (see 3.1), when switches are tested as specified in 4.8.7, there shall be no opening or closing of contacts in excess of 10 microseconds (usec). During the test there shall be no visual indication of light intermittency. After the test, there shall be no mechanical damage or impairment of operation.

3.11 Shock. Unless otherwise specified (see 3.1), when switches are tested as specified in 4.8.8, there shall be no opening or closing of contacts in excess of 10 usec for method I or 20 ms for method II. There shall be no change in operation, mechanical damage, broken, loose, deformed or displaced parts, or impairment or normal operation.

3.12 Terminal strength. When switches are tested as specified in 4.8.9, there shall be no breakage, loosening, or rotation of terminals, and no damage to the switch shall occur.

3.13 Lamp retention (when applicable, see 3.1). When tested as specified in 4.8.10, lamps shall be held captive within the removable portion of the lens assembly. The captive means shall be capable of retaining the appropriate lamp retention adapter.

3.14 Torque strength of plunger. When switches are tested as specified in 4.8.11, the plunger shall withstand the applied torque without damage.

3.15 Strength of actuator and actuator stop. When switches are tested as specified in 4.8.12, there shall be no malfunction or damage upon application of the static load.

3.16 Dielectric withstanding voltage. When switches are tested as specified in 4.8.13, there shall be no arcing, flashover, breakdown, or current flow in excess of 1 milliampere (ma).

3.17 Salt spray (corrosion). When switches are tested as specified in 4.8.14, there shall be no evidence of excessive corrosion, nor shall there be warping, cracking, or other damage, and when applicable the lenses shall show no color fading. NOTE: Excessive corrosion is defined as that which interferes with the electrical or mechanical performance, or in the case of plated metals, corrosion which has passed through the plating and attacked the base metal.

3.18 Insulation resistance. Unless otherwise specified (see 3.1), when switches are tested as specified in 4.8.15, the insulation resistance shall be not less than 1,000 megohms.

3.19 Moisture resistance. Unless otherwise specified (see 3.1), when surfaces are tested as specified in 4.8.16, the insulation resistance, immediately after conclusion of the test and while the switches are still in the humidity chamber, shall be not less than 10 megohms. At the end of the drying period, the insulation resistance shall be not less than 100 megohms. At the conclusion of the test there shall be no evidence of breaking, cracking, spalling, or loosening of terminals. There shall be no evidence of pitting of plated metal surfaces, and when applicable, the lenses shall show no color fading.

3.20 Mechanical endurance. When switches are tested as specified in 4.8.17, there shall be no evidence of mechanical damage or malfunction.

3.21 Sand and dust (when applicable, see 3.1). When switches are tested as specified in 4.8.18, there shall be no evidence of degradation of switching functions, and they shall be mechanically and electrically operative.

3.22 Seal (when applicable, see 3.1).

3.22.1 Watertight. When switches are tested as specified in 4.8.19.1, there shall be no leakage past the panel seals as determined by visual examination.

3.22.2 Dripproof. When switches are tested as specified in 4.8.19.2, there shall be no leakage of water into the test enclosure as determined by visual examination.

3.23 Overload. When switches are tested as specified in 4.8.20, there shall be no mechanical or electrical failure.

3.24 Electrical endurance. When switches are tested as specified in 4.8.21, there shall be no electrical or mechanical failure. The lenses shall show no surface deterioration.

3.25 Marking. Switches shall be marked in accordance with MIL-STD-130, with the following information:

(a) Manufacturer's name, trademark, or code symbol (the code symbol shall be in accordance with MIL-STD-1285).
(b) Military part number, type designation or manufacturer's part number when not covered by a specification sheet.
(c) Date code in accordance with MIL-STD-1285.

3.26 Workmanship. Switches shall be processed in such a manner as to be uniform in quality and shall be free from defects that will affect life, serviceability, or appearance.

3.26.1 Lens (when applicable, see 3.1). Lens shall be free from open surface bubbles or internal bubbles which may be observed with lamps energized.

4. VERIFICATION

4.1 Classification of inspection. The examination and testing of switches shall be classified as follows:

(a) Component-materials inspection (see 4.3).
(b) Qualification inspection (see 4.5).
(c) Preproduction inspection (see 4.6).
(d) Quality conformance inspection (see 4.7).
    (1) Inspection of product for delivery (see 4.7.1).
    (2) Inspection of preparation for delivery (see 4.7.2).

4.2 Test equipment and inspection facilities. Test and measuring equipment and inspection facilities of sufficient accuracy, quality, and quantity to permit performance of the required inspection shall be established and maintained by the contractor. The establishment and maintenance of a calibration system to control the accuracy of the measuring and test equipment shall be in accordance with ANSI/NCSL Z540.3, ISO 10012-1 or approved equivalent.

4.3 Component-materials inspection. Component-materials inspection shall consist of verification that the component materials listed in table IV, used in fabricating the switches, are in accordance with the applicable referenced specifications or requirements prior to such fabrication.

TABLE IV. Component-materials inspection.

Component material	Requirement paragraph	Applicable specification or requirement
Plastic material:		
Thermosetting	3.3.2.1	ASTM-D5948
Thermoplastics	3.3.2.2	ASTM-D4066, L-P-410, ASTM-D635
Rubber	3.3.3	A-A-59588
Finish:		
Anodized aluminum	3.3.4	MIL-A-8625
Chemical treatment for aluminum	3.3.4	MIL-DTL-5541

4.4 Inspection conditions. Unless otherwise specified herein, all inspections shall be made in accordance with the general requirements of MIL-STD-202.

4.5 Qualification inspection. Qualification inspection shall be performed at a laboratory acceptable to the Government (see 6.3) on sample units produced with equipment and procedures normally used in production.

4.5.1 Sample. Unless otherwise specified (see 3.1), the number of sample units comprising a sample of switches to be submitted for qualification inspection shall be in accordance with table V. The sample shall be produced with equipment and procedures normally used in production. The sample shall consist of switches, of one basic style (complete with barriers, panel seals, and color filters, if applicable), and at least one lens of each style, color, and transmittance (see 3.1).

4.5.2 Inspection routine. Sample units of switches shall be subjected to the qualification inspection specified in table III, in the order shown. All sample units shall be subjected to the inspection of group I. The sample units shall then be divided as specified in table III and subjected to the inspection for their particular group. All applicants for qualification approval under this specification shall demonstrate that each of their items conforms to all the requirements specified in the applicable documents (see 3.1), singularly and in combination with all other previously qualified items, regardless of manufacturer.

4.5.3 Failures. One or more failures shall be cause for refusal to grant qualification approval. Lamp failure shall not be considered a unit failure; when the lamp failure is noted, immediately a new lamp is installed and the lamp functions test shall then be continued, as required. A lamp or LED failure for a nonreplaceable item shall be considered a unit failure (see 3.1).

4.5.4 Extent of qualification.

4.5.4.1 Single submission. Qualification shall be restricted to the style submitted.

4.5.4.2 Group submission. The extent of qualification shall be in accordance with the applicable specification sheet (see 3.1).

4.5.5 Retention of qualification. To retain qualification, the supplier shall forward at 24-month intervals, or when 50,000 units of one style have been produced whichever is more frequent to the qualifying activity, a summary of the results of groups A and B tests, indicating as a minimum the number of lots which passed and the number which failed, and the complete results of group C tests. If test results indicate nonconformance with specification requirements, action shall be taken to remove the failing product from the qualified products list. Failure to submit the test results shall result in loss of qualification for that product. In addition to the periodic submission of inspection data, the supplier shall immediately notify the qualifying activity when inspection data indicates failure of the qualified product to meet the requirements of this specification.

4.6 Preproduction inspection. Preproduction inspection shall be performed by the supplier, after award of contract and prior to production, at a laboratory satisfactory to the Government (see 6.2.2). Unless otherwise specified (see 6.2.2), the samples and test routine shall be as specified in table V.

4.7 Conformance inspection.

4.7.1 Inspection of product for delivery. Inspection of product for delivery shall consist of groups A, B, and most recent C.

4.7.1.1 Inspection lot. An inspection lot, as far as practicable, shall consist of all switches, barriers, color filters, lenses, and panel seals covered by the same military specification sheet produced under essentially the same conditions, and offered for inspection at one time.

4.7.1.2 Group A inspection. Group A inspection shall consist of the examinations and tests specified in table VI, and shall be made on the same set of sample units in the order shown.

4.7.1.2.1 Sampling plan. Statistical sampling shall be in accordance with table VI and table VII. A randomly selected group(s) of samples is required. For acceptance of the lot there shall be zero occurrences of defects.

4.7.1.2.2 Rejected lots. If an inspection lot is rejected, the supplier may withdraw the lot, rework it to correct the defects, or screen out the defective units, as applicable, and reinspect. Such lots shall be separate from new lots, and shall be clearly identified as reinspected lots. Rejected lots shall be inspected using tightened inspection.

4.7.1.3 Group B inspection. Group B inspection shall consist of the examinations and tests specified in table VIII, in the order shown, and shall be made on sample units which have been subjected to and have passed the group A inspection.

4.7.1.3.1 Sampling plan. Statistical sampling shall be in accordance with table VII. A randomly selected group(s) of samples is required.

4.7.1.3.2 Rejected lots. If an inspection lot is rejected, the supplier may withdraw the lot, rework it to correct the defects, or screen out the defective units, as applicable, and reinspect. Such lots shall be kept separate from new lots, and shall be clearly identified as reinspected lots. Rejected lots shall be inspected using tightened inspection.

4.7.1.3.3 Disposition of sample units. Sample units which have passed group B inspection may be delivered on the contract or order, if the lot is accepted.

4.7.1.4 Group C inspection. Group C inspection shall consist of the examinations and tests specified in table V, in the order shown. The lenses, color filters, panel seals and barriers, when applicable shall be tested as a part of the basic switch. Shipment shall not be held up pending results of the inspection.

4.7.1.4.1 Sampling plan. Sample units as specified in table V shall be selected from each 50,000 units of all switches, barriers, color filters, lenses, and panel seals covered by the same military specification sheet produced or within each three year period after the date of notification of qualification whichever comes first. If one or more sample units fail to pass group C inspection, the sample shall be considered to have failed. A manufacturer's normal quality control tests, production tests, environmental tests, and so forth, may be used to fulfill all or part of group C inspection; however, all of group C inspection shall be completed as specified.

4.7.1.4.1.1 Group C suspension: At the request of the manufacturer, group C testing may be suspended with the qualifying activity's approval if it can be demonstrated that these test have been performed three consecutive times with zero failures. If the design, material, construction, or processing is changed or if there are any quality problems or failures, or at their discretion the qualifying activity may require resumption of the original testing requirement. Suspension of testing does not relieve the manufacturer form meeting the group C test requirements.

4.7.1.4.2 Disposition of sample units. Sample units which have been subjected to group C inspection shall not be delivered on the contract or order.

4.7.1.4.3 Noncompliance. If a sample fails to pass group C inspection, the supplier shall take corrective action on the materials or processes, or both, as warranted, and on all units of product which can be corrected and which were manufactured under essentially the same conditions, with essentially the same materials, and processes, and which are considered subject to the same failure. Acceptance of the product shall be discontinued until corrective action, acceptable to the Government, has been taken. After the corrective action, acceptable to the Government, has been taken. After the corrective action has been taken, group C inspection shall be repeated on additional sample units (all inspection or the inspection which the original sample failed, at the option of the Government). Groups A and B inspection may be reinstituted; however, final acceptance shall be withheld until the group C inspection has shown that the corrective action was successful. In the event of failure after reinspection, information concerning the failure and corrective action taken shall be furnished to the contracting officer, and to the qualifying activity.

4.7.2 Inspection of preparation for delivery. Sample packages and packs shall be selected and inspected in accordance with the schedule of acceptance tests and visual inspection aids of MIL-STD-2073-1, to verify conformance with the requirements in section 5 of this specification

TABLE V. Qualification inspection.

Examination or test	Requirement paragraph	Method paragraph
Group I (18 sample units) 1/		
Visual and mechanical examination	3.1, 3.3, 3.4, 3.25 and 3.26	4.8.1
Solderability 2/	3.5	4.8.2
Switch actuation and circuit configuration	3.6	4.8.3
Contact resistance	3.7	4.8.4
Simultaneity	3.8	4.8.5
Group II (4 sample units from group I)		
Thermal shock	3.9	4.8.6
Vibration, high frequency	3.10	4.8.7
Shock (specified pulse) method I	3.11	4.8.8.1
Shock (high impact) method II (when applicable)	3.11	4.8.8.2
Terminal strength	3.12	4.8.9
Lamp retention (when applicable)	3.13	4.8.10
Torque strength of plunger	3.14	4.8.11
Strength of actuator and actuator stop	3.15	4.8.12
Dielectric withstanding voltage	3.16	4.8.13
Group III (2 sample units from group II)		
Salt spray (corrosion)	3.17	4.8.14
Dielectric withstanding voltage	3.16	4.8.13
Switch actuation and circuit configuration	3.6	4.8.3
Group IV (2 sample units from group II)		
Insulation resistance	3.18	4.8.15
Moisture resistance	3.19	4.8.16
Switch actuation and circuit configuration	3.6	4.8.3
Group V (2 sample units from group I)		
Mechanical endurance	3.20	4.8.17
Sand and dust (when applicable)	3.21	4.8.18
Seal (when applicable)	3.22	4.8.19
Dielectric withstanding voltage	3.16	4.8.13
Switch actuation and circuit configuration	3.6	4.8.3
Group VI (12 sample units from group I)		
Overload	3.23	4.8.20
Electrical endurance (2 switches each)		
Resistive circuit (ac and dc)		
Inductive circuit (ac and dc)	3.24	4.8.21
Lamp load (ac and dc)		
Dielectric withstanding voltage	3.16	4.8.13

1/ At the time of submission four additional sample units shall be required for qualification for shock (high- impact) method II and shall be subjected to groups I and II only.
2/ Two sample units only.

TABLE VI. Group A inspection.

Examination or test	Requirement paragraph	Method paragraph
Visual and mechanical examination	3.1, 3.3, 3.4, 3.25 and 3.26	4.8.1
Switch actuation and circuit configuration	3.6	4.8.3

TABLE VII. Zero defect sampling plan.

Lot size	Minimum number of switches to be tested
1 - 12	All
13 - 150	13
151 - 280	20
281 - 500	29
501 - 1,200	34
1,201 - 3,200	42
3,201 - 10,000	50
10,001 - 35,000	60

TABLE VIII. Group B inspection.

Examination or test	Requirement Paragraph	Method paragraph
Dielectric withstanding voltage	3.16	4.8.13
Contact resistance	3.7	4.8.4
Seal (when applicable)	3.22	4.8.19

4.8 Methods of examination and test.

4.8.1 Visual and mechanical examination. Switches, lenses, color filters, panel seals and barriers shall be examined to determine that the material, design, construction, physical dimensions, marking, and workmanship are in accordance with the applicable requirements. (See 3.1, 3.3, 3.4, 3.25, and 3.26.)

4.8.2 Solderability (see 3.5). Switches shall be tested in accordance with method 208 of MIL-STD-202. The following details and exception shall apply:

(a) Number of terminations of each switch to be tested – Five.
(b) Dipping machine – Need not be used.
(c) Solder dip – Not applicable.
(d) Examination of terminations – Method for evaluation of lugs and tabs shall apply.

4.8.3 Switch actuation and circuit configuration (see 3.6). The actuation and circuit configuration of the switch shall be tested by use of test circuits for compliance with the specified functions.

4.8.4 Contact resistance (see 3.7). Switches shall be tested in accordance with the following:

4.8.4.1 Switch terminals (see 3.7.1). Switch terminals shall be tested in accordance with method 307 of MIL-STD-202. The following details and exception shall apply:

(a) Method of connection – Connections shall be made by clamps or shall be soldered.
(b) Test current – 100 milliamperes (ma).
(c) Maximum open-circuit test voltage – 6 ± 1 volts, direct current (vdc).
(d) Number of activations prior to measurement – Not applicable.
(e) Number of test activations – Three activations per pole.
(f) Number of measurements per activation – One measurement. (The average of the 3 readings shall be considered the contact resistance.)
(g) Points of measurement – Measurements shall be made across the terminals of each switching circuit with the switch contacts closed. Measurements shall be made for all poles in a switch.

4.8.4.2 Lamp terminals (when applicable, see 3.7.2). Lamp terminals shall be tested in accordance with method 307 of MIL-STD-202. The following details and exceptions shall apply:

(a) Method of connection – Connections shall be made by clamps or shall be soldered.
(b) Preparation for test – An applicable lamp retention adapter (see figure 1) shall be used.
(c) Test current – 100 milliamperes (ma).
(d) Number of adapter insertions – Three.
(e) Number of measurements per insertion – One measurement between the lamp terminals. (The average of the three readings shall be considered the contact resistance.)

4.8.5 Simultaneity (see 3.8). Using suitable measuring equipment, simultaneity of switch contacts in any station shall be measured at an actuation rate of 2.0 inch per second. Only one of each five stations in a multistation switch shall be tested.

4.8.6 Thermal shock (see 3.9). Switches shall be tested in accordance with method 107 of MIL-STD-202. Unless otherwise specified (see 3.1), the following details and exception shall apply:

(a) Test-condition letter – A, except the upper temperature for lenses shall be 71°C +3° -0°C, unless otherwise specified (see 3.1).
(b) Measurements after cycling – Switches shall be examined for mechanical or electrical damage. When applicable, lenses shall be examined for discoloration or deformation.

4.8.7 Vibration, high frequency (see 3.10). Switches shall be tested in accordance with method 204 of MIL-STD-202. The following details and exceptions shall apply:

(a) Mounting of specimens – Normal mounting means.
(b) Test-condition letter – A.
(c) Test and measurement during vibration – Contact chatter shall be continuously monitored during vibration in accordance with method 310 of MIL-STD-202.
(d) Examination after test – Switches shall be examined for mechanical damage or impairment of operation.

4.8.8 Shock (see 3.11). Switches shall be tested in accordance with 4.8.8.1, and when specified (see 3.1) with 4.8.8.2.

4.8.8.1 Method I (specified pulse)). Switches shall be tested in accordance with method 213 of MIL-STD-202. The following details and exception shall apply:

(a) Mounting method and accessories – Switches shall be secured to a sufficient mass in each of its three principal axes, in turn.
(b) Test-condition letter – I.
(c) Measurement before test – Not applicable.
(d) Measurement during test – Switch contact stability shall be continuously monitored during shock in accordance with method 310 of MIL-STD-202.
(e) Measurement after test – When applicable, the lamp circuits of the switch housing shall be energized.
(f) Examinations after test – Switches shall be examined for any change in operation, mechanical damage, broken, loose, deformed and displaced parts, and impairment of normal operation.

4.8.8.2 Method II (high-impact shock) (when specified, see 3.1). Switches shall be tested in accordance with method 207 of MIL-STD-202. The following details and exception shall apply:

(a) Mounting fixture – Same as 4.8.8.1(a).
(b) Monitoring during test – Switch contact stability shall be monitored for each blow in accordance with method 310 of MIL-STD-202.
(c) Measurements after test – Same as 4.8.8.1(e).
(d) Examination after test – Same as 4.8.8.1(f).

4.8.9 Terminal strength (see 3.12). Switches shall be tested in accordance with one of the following methods, as applicable. Only 5 terminals need to be tested.

4.8.9.1 Solder terminals. Switches with solder terminals shall be tested in accordance with method 211 of MIL-STD-202. The following details and exceptions shall apply:

(a) Test-condition letter – A.
(b) Applied force – 4-1/2 pounds.
(c) Direction of applied force – Parallel to the long axis of the terminal, perpendicular to the long axis of the terminal, perpendicular to the long axis of the terminal, and in any direction most likely to cause failure. No one terminal shall be tested in more than one direction.
(d) Duration of applied force – One minute.

After the test, the switches shall be examined for breakage, loosening and rotation of terminals, and any damage to the switch.

4.8.9.2 Screw terminals. Switches with screw terminals shall be tested in accordance with 4.8.9.2.1 and 4.8.9.2.2.

4.8.9.2.1 Pull. Screw terminals shall be subjected to a pull of the applicable static force specified in table IX in a direction along the axis of the terminal screw, in a direction perpendicular to the axis of the terminal screw, and in the direction most likely to cause failure. No one terminal shall be tested in more than one direction. The force shall be applied for one minute. After the test, switches shall be examined for any damage and breakage, loosening, and rotation of terminals.

TABLE IX. Static force values.

Thread size	Force in pounds
4-40	5
6-32	30
8-32	35
10-32	40
10-24	40
1/4-28	50

4.8.9.2.2 Torque. Screw terminals shall be tested in accordance with method 211 of MIL-STD-202. The following detail and exception shall apply:

(a) Test-condition letter – E, except that for thread sizes 10-24, the torque shall be 24.0 pound-inches.
(b) Direction of torque – In the direction of the screw threads.

After the test, switches shall be examined for any damage and breakage, loosening and rotation of terminals.

4.8.9.3 Wire-lead terminals. Switches with wire-lead terminals shall be tested in accordance with method 211 of MIL-STD-202. The following details and exceptions shall apply:

(a) Test-condition letter – A.
(b) Applied force – 15 pounds.
(c) Direction of applied force – In any direction, including the one most likely to cause failure.
(d) Duration of applied force – One minute.

After the test, the switches shall be examined for any damage and breakage, loosening, and rotation of terminals.

4.8.10 Lamp retention (when applicable, see 3.13). A lamp retention adapter in accordance with figure 1 shall be inserted (to complete lens engagement) and withdrawn five times. With the adapter installed in the applicable lens, and the lens held so that the base on the adapter points directly downward, the unit shall remain captive to the lens.

4.8.10.1 Insertion, withdrawal and removal force (snap-in lenses). Snap-in lenses shall be subjected to an insertion, withdrawal and removal test to determine conformance with 3.4.7.1.

4.8.11 Torque strength of plunger (see 3.14). With the switches mounted by normal means, a torque of 5 inch-pounds shall be applied to the plunger in a plane perpendicular to the centerline of the plunger for a period of 1 minute.

4.8.12 Strength of actuator and actuator stop (see 3.15). With the switch mounted by normal means, a static load of 25 pounds, unless otherwise specified (see 3.1), shall gradually be applied in line with the actuator for a period of 1 minute.

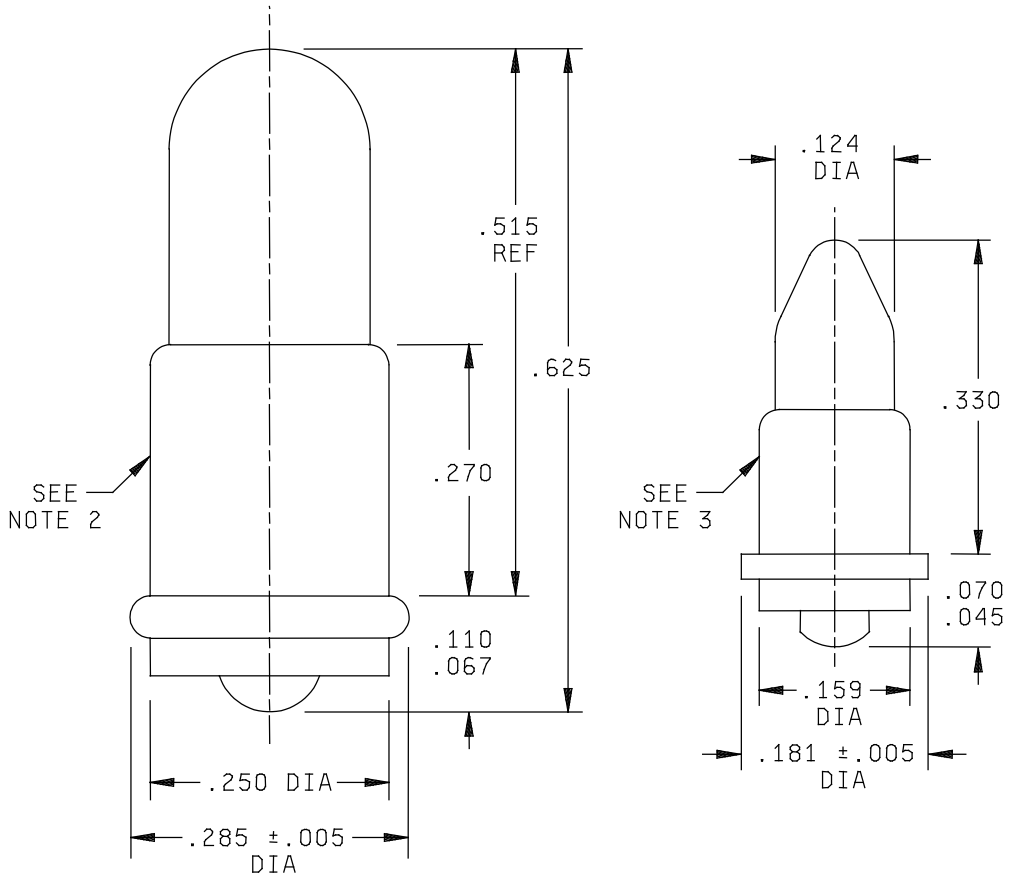

Inch	mm	Inch	mm	Inch	mm
.005	.13	.124	3.15	.285	7.24
.045	1.14	.159	4.04	.330	8.38
.067	1.70	.181	4.60	.515	13.08
.070	1.78	.250	6.35	.625	15.88
.110	2.79	.270	6.86		

NOTES:
1. Dimensions are in inches.
2. Reference MIL-DTL-6363/8-7 (T-1 ¾ midget-flanged base lamp).
3. Reference MIL-DTL-6363/6-4 (T-1 subminiature-flanged-base lamp).
4. Unless otherwise specified, tolerance is .XXX ± .001 (.03 mm).
5. Metric equivalents (to the nearest .01 mm) are given for general information only and are based upon 1 inch = 25.4 mm.
6. Lamp retention adapters shall be of metal and shall weigh 5gm +1 –0 and may be counterbored to achieve weight.

FIGURE 1. Lamp retention adapters.

4.8.13 Dielectric withstanding voltage (see 3.16). Switches shall be tested in accordance with 4.8.13.a and, when specified (see 3.1), in accordance with 4.8.13.2.

4.8.13.1 At atmospheric pressure. Switches shall be tested in accordance with method 301 of MIL-STD-202. The following details and exception shall apply:

(a) Special preparations or conditions – The tests shall be conducted with the unit in its normal position and shall be repeated for all other operating positions. Lamps, if applicable, shall be removed from the switch before these tests.
(b) Magnitude of test voltage – 1,000 volts, rms.
(c) Nature of potential – AC.
(d) Duration of application of test voltage – One minute for qualification and group C inspection; five seconds for other tests.
(e) Points of application –
    (1) Between all terminals and ground.
    (2) Between all adjacent contact terminals of different poles.
    (3) Between all unconnected terminals of the same pole.
    (4) When applicable, between lamp circuit terminals and unconnected switch contact terminals.
(f) Examination after test – Switches shall be examined for arcing, flashover, and breakdown, and current flow in excess of 10 microamperes.

4.8.13.2 At reduced barometric pressure. Switches designed for operation above 10,000 feet shall be tested as specified in 4.8.13.1, and in accordance with method 105 of MIL-STD-202. The following details and exception shall apply:

(a) Method of mounting – Normal mounting means.
(b) Test-condition letter – C, unless otherwise specified (see 3.1).
(c) Test voltage – 400 volts rms.

4.8.14 Salt spray (corrosion) (see 3.17). Switches shall be tested in accordance with method 101 of MIL-STD-202. The following detail and exception shall apply:

(a) Test-condition letter – B.
(b) Examination after exposure – Switches shall be subjected to 10 cycles of operation of making and breaking the rated resistive current at the lowest dc voltage specified (see 3.1), after a 6 hour drying period in a forced draft oven, at a temperature of approximately 57°C.

After the test, switches shall be examined for evidence of excessive corrosion, warping, cracking, any other damage, and when applicable, color fading of the lenses.

4.8.15 Insulation resistance (see 3.18). Switches shall be tested in accordance with method 302 of MIL-STD-202. The following details shall apply:

(a) Test-condition letter – B.
(b) Special conditions – As specified in 4.8.13.1(a).
(c) Points of measurement – As specified in 4.8.13.1(e).

4.8.16 Moisture resistance (see 3.19). Switches shall be tested in accordance with method 106 of MIL-STD-202. The following details and exceptions shall apply:

(a) Mounting – By normal means, on corrosion-resistant metal panel positioned 15 degrees from the vertical, with the switch actuator up.
(b) Initial measurements – Not applicable.
(c) Polarization voltage – During steps 1 to 6 inclusive, 100 volts dc shall be applied and the metal panel. The negative polarity shall be applied to the metal panel.
(d) Loading voltage – Not applicable.
(e) Steps 7a and 7b – Not applicable.
(f) Final measurements – Unless otherwise specified (see 3.1), immediately after the conclusion of the test and while the switches are still in the humidity chamber, and also at the end of the drying period, insulation resistance shall be measured as specified in 4.8.15.

After the test, switches shall be examined for breaking, cracking, spalling, and loosening of terminals, pitting of plated metal, and color fading of lenses, when applicable.

4.8.17 Mechanical endurance (see 3.20). Switches shall be subjected to 50,000 cycles of operation at room temperature. The cycling rate shall not exceed 100 cycles of operation per minute. A cycle of operation shall be the movement of the actuating means through the entire range of its travel causing the switch contacts to change from one position to another.

4.8.18 Sand and dust (when applicable, see 3.21). Switches shall be tested in accordance with method 110, test-condition letter B, of MIL-STD-202. During the test, the switches shall be mechanically operated for 2,5000 cycles. The cycling rate shall not exceed 60 cycles of operation per minute.

4.8.19 Seal (when applicable, see 3.22). When specified (see 3.1), switches shall be tested in accordance with 4.8.19.1 or 4.8.19.2. Before conducting the test, all gaskets which normally can be replaced in service without disassembly shall be disassembled and then reassembled to the switch.

4.8.19.1 Watertight. The switch, mounted on a test enclosure by normal mounting means, shall be submerged in water to a depth of 6 ± 2 inches, and subjected to a gradually increasing pressure at a rate of 1 pound per square inch gage (psig) every 2 minutes until a pressure of 15 psig is reached, and maintained at that pressure for 30 minutes. During the period of maximum pressure, the switch shall be operated for 25 cycles of operation.

4.8.19.2 Dripproof. The switch, mounted by normal means, shall be subjected to the dripproof test of MIL-STD-108. The following details and exceptions shall apply:

(a) Quantity of water – 1 gallon per station, with a minimum of 5 gallons. Water shall be evenly distributed.
(b) Duration – 5 minutes.
(c) Variation from vertical – 15 degrees.
(d) Stream position – 12 inches maximum above the switch.

4.8.20 Overload (see 3.23). Switches shall be subjected to 50 make-and-break cycles of operation at a rate of 5 to 6 cycles per minute while carrying 150 percent rated resistive current at the lowest dc voltage specified (see 3.1). The duty cycle shall be approximately 50 percent on and 50 percent off. The switches shall be electrically and mechanically operated at the conclusion of the test.

4.8.21 Electrical endurance (see 3.24).

4.8.21.1 Conditions.

(a) Unless otherwise specified (see 3.1), test loads shall be arranged so that an independent load shall be provided for each pole, and the life cycle for each electrical load shall be 25,000 cycles.
(b) Switches shall be continuously monitored and recorded to determine whether any contact has failed to open or close its individual circuit in the proper sequence. The monitoring circuit shall not shunt inductive components of inductive loads or switch contacts.
(c) The duty cycle shall be approximately 50 percent on and 50 percent off for resistive and inductive loads. The duty cycle shall be approximately 30 percent on and 70 percent off for lamp loads.
(d) The cycling rate shall be 10 to 12 cycles per minute.
(e) When testing switch styles having normally open and normally closed contact arrangement, samples shall be equally divided between the two arrangements. All samples shall be tested in their normal positions.
(f) In any of the specified load tests, each conductor shall be of an applicable size for single use in free air as listed in SAE-AS50881. If the rating of the switch under test does not coincide with a wire size, the next larger diameter wire shall be used.
(g) One side of the power supply, one side of the test load, the switch mounting plate, metal housing (if applicable), and the actuating member, if metal, shall be connected to a common ground.

4.8.21.2 Loads. Voltage, current, frequency, and altitude, shall be as specified (see 3.1), however, altitude electrical tests shall be conducted at room ambient condition only. Unless otherwise specified, the life cycle for each electrical load shall be 25,000 cycles. The loads are as follows:

(a) Resistive load, dc. Only noninductive resistive components shall be used.
(b) Inductive load, dc.
    (1) Method I. Inductive dc loads shall use inductors, so adjusted that the time constant L/R (time required for current to reach 63.2 percent of its steady-state value) shall be not less than 0.025 second.
(c) Lamp load, dc. Lamp loads, dc, shall be tungsten lamps which provide the rated, steady-state lamp current. Only tungsten lamps having a nominal wattage of 25 to 50 watts, of the voltage specified, shall be used to make up the load.
(d) Resistive load, ac. Only noninductive resistive components shall be used.
(e) Inductive load, ac. Inductive ac load test circuits shall consist of inductive and resistive load elements connected in series. The circuit parameters shall be rated inductive load current at 0.7 ± 0.05 lagging power factor at 115 volts.
(f) Lamp load, ac. Similar to (c) above, except that the rated ac voltage shall be used. Only tungsten lamps having a nominal wattage not to exceed 200 watts, at the voltage specified, shall be used to make up the load.

5. PACKAGING

5.1 Packaging. For acquisition purposes, the packaging requirements shall be as specified in the contract or order (see 6.2). When packaging of materiel is to be performed by DoD or in-house contractor personnel, these personnel need to contact the responsible packaging activity to ascertain packaging requirements. Packaging requirements are maintained by the Inventory Control Point's packaging activities within the Military Service or Defense Agency, or within the military service's system commands. Packaging data retrieval is available from the managing Military Department's or Defense Agency's automated packaging files, CD-ROM products, or by contacting the responsible packaging activity.

6. NOTES

6.1 Intended use. The switches covered by this specification are intended for use as panel displays and switching devices in alternating and direct current applications.

6.2 Ordering data.

6.2.1 For switches covered by specification sheets. Acquisition documents should specify the following:

(a) Title, number, and date of this specification.
(b) Title, number, and date of the applicable specification sheet, the type designation, and all additional information to completely describe the switch, such as number of stations, applicable switch housing and lens, and station functions
(c) Lens marking, if required (see 3.4.7).
(d) Levels of preservation, packaging, packing and marking (see section 5).

6.2.2 For switches not covered by specification sheets. Acquisition documents should specify the following:

(a) Title, number, and date of this specification.
(b) Classification (see 1.2).
(c) Manufacturer's part number.
(d) Requirements (see 3.1), including the following:
  (1) Applicable drawings, including all dimensions, actuation and circuit configuration.
  (2) Identification of terminals, and schematic, if required (see 3.4.1.1).
  (3) Switch functions (see 3.4.4).
  (4) Circuit characteristic (see 3.4.5).
  (5) Lamp type, if applicable (see 3.4.6).
  (6) Lens design, material type, color, luminance and required marking, if applicable (see 3.4.7).
  (7) Color filters (type etc) when applicable (see 3.4.8).
  (8) Mounting ad spacer barriers, when applicable (see 3.4.9).
  (9) Panel seals, when applicable (see 3.4.10).
  (10) Shock test, method II, if applicable (see 4.8.8).
  (11) Dielectric withstanding test at reduced barometric pressure, if applicable (see 4.8.13).
  (12) Seal, when applicable (see 4.8.19).
(e) Preproduction inspection requirements, if other than that specified in 3.2.2 and 4.6.
  The laboratory at which the inspection is to be performed, samples, and test routine, if other than that specified (see 4.6).
(f) Levels of preservation, packaging, packing, and marking (see section 5).

6.2.3 Indirect shipments. The preservation, packaging, packing, and marking specified in section 5 is intended for direct purchases by or direct shipments to the Government and are not intended to apply to contracts or orders between the supplier and the prime contractor.

6.3 Qualification and preproduction.

6.3.1 Qualification. With respect to products requiring qualification, awards will be made only for products which are, at the time of award of contract, qualified for inclusion in Qualified Products List (QPL) whether or not such products have actually been so listed by that date. The attention of the contractors is called to these requirements, and manufacturers are urged to arrange to have the products that they propose to offer to the Federal Government tested for qualification in order that they may be eligible to be awarded contracts or orders for the products covered by this specification. Information pertaining to qualification of products may be obtained via email to vqp.chief@dla.mil or from the DLA Land and Maritime, Attn: VQP, 3990 East Broad Street, Columbus, OH 43213-1199.). An online listing of products qualified to this specification may be found in the Qualified Products Database (QPD) at https://assist.daps.dla.mil.

6.3.2 Preproduction. Preproduction approval is valid only on the contract or purchase order which it is granted, unless extended by the Government to other contracts or purchase orders. Information pertaining to preproduction inspection of products covered by this specification shall be obtained from the procuring activity issuing the contract or purchase orders.

6.4 Key words.

Communications equipment
Controls
Electronics
Lighted
Light
RFI Shielded
Sealed

6.5 Tin whisker growth. The use of alloys with tin content greater than 97 percent, by mass, may exhibit tin whisker growth problems after manufacture. Tin whiskers may occur anytime from a day to years after manufacture and can develop under typical operating conditions, on products that use such materials. Conformal coatings applied over top of a whisker-prone surface will not prevent the formation of tin whiskers. Alloys of 3 percent lead, by mass, have shown to inhibit the growth of tin whiskers. For additional information on this matter, refer to ASTM-B545 (Standard Specification for Electrodeposited Coatings of Tin).

6.6 Environmentally preferable material. Environmentally preferable materials should be used to the maximum extent possible to meet the requirements of this specification. As of the dating of this document, the U.S. Environmental Protection Agency (EPA) is focusing efforts on reducing 31 priority chemicals. The list of chemicals and additional information is available on their website at http://www.epa.gov/osw/hazard/wastemin/priority.htm. Included in the EPA list of 31 priority chemicals are cadmium, lead, and mercury. Use of these materials should be minimized or eliminated unless needed to meet the requirements specified herein (see Section 3).

6.7 Changes from previous issue. The margins of this specification are marked with vertical lines to indicate where modifications from this revision were made. This was done as a convenience only and the Government assumes no liability whatsoever for any inaccuracies in these notations. Bidders and contractors are cautioned to evaluate the requirements of this document based on the entire content irrespective of the marginal notations.

Custodians:
Navy - EC
Air Force - 85
DLA - CC

Preparing activity:
DLA - CC

(Project 5930-2009-033)

NOTE: The activities listed above were interested in this document as of the date of this document. Since organizations and responsibilities can change, you should verify the currency of the information above using the ASSIST Online database at https://assist.daps.dla.mil/