INCH-POUND

MIL-DTL-24308/38
1 April 2015

DETAIL SPECIFICATION SHEET

CONNECTORS, ELECTRIC, RECTANGULAR, MINIATURE, COMBINATION INSERT ARRANGEMENT, PLUG, SOCKET CONTACTS, SHELL SIZE 5, SIZE 20 SIGNAL CONTACTS AND SIZE 8 POWER AND SHIELDED, CLASS G, M, N AND D

This specification is approved for use by all Departments and Agencies of the Department of Defense.

The requirements for acquiring the product described herein shall consist of this specification sheet and MIL-DTL-24308.

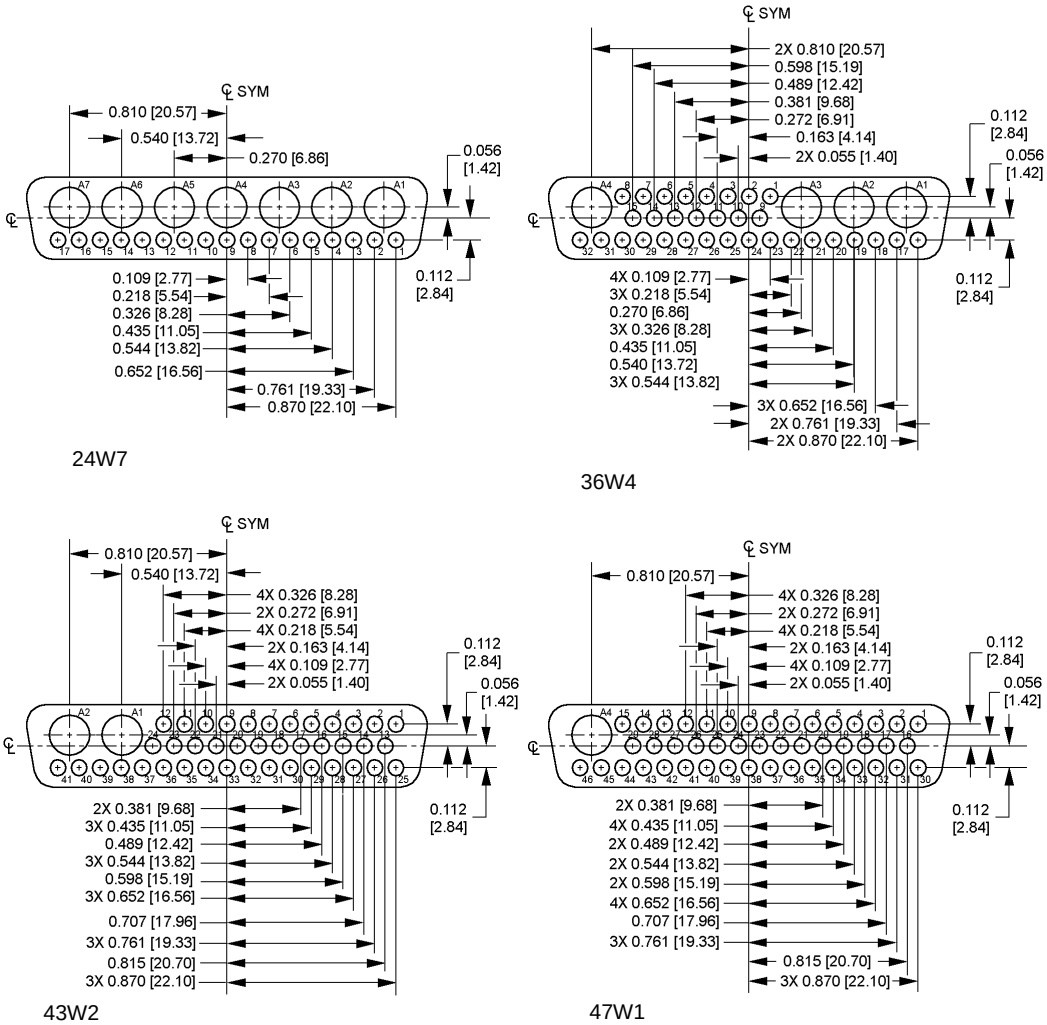

FIGURE 1. Insert arrangements, shell size 5, pin contacts.

AMSC N/A

FSC 5935

NOTES:
1. Dimensions are in inches.
2. Metric equivalents are given for information only.
3. Unless otherwise specified, tolerance for three place decimals is ±.005 inch (0.13 mm).
4. All dimensions are true position (TP).
5. Contact holes in insert shall be located on TP within a .005 inch (0.13 mm) diameter circle.
6. Reference documents shall be of the issue in effect on date of invitations for bid.

FIGURE 1. Insert arrangements, shell size 5, pin contacts – Continued.

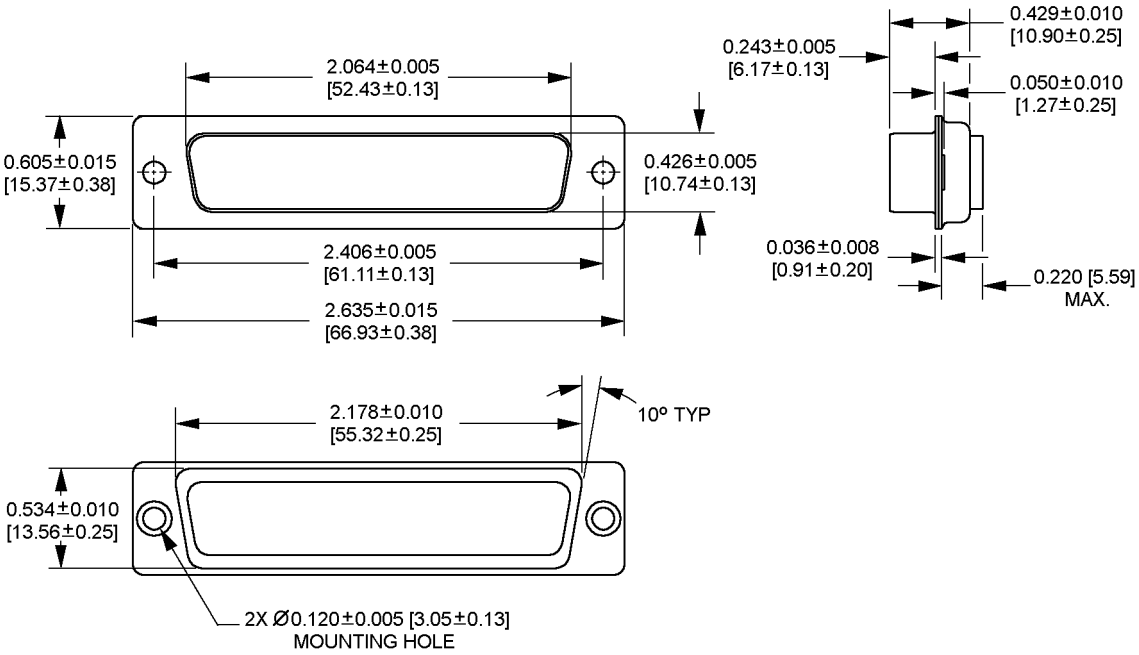

FIGURE 2. Dimensions shell size 4.

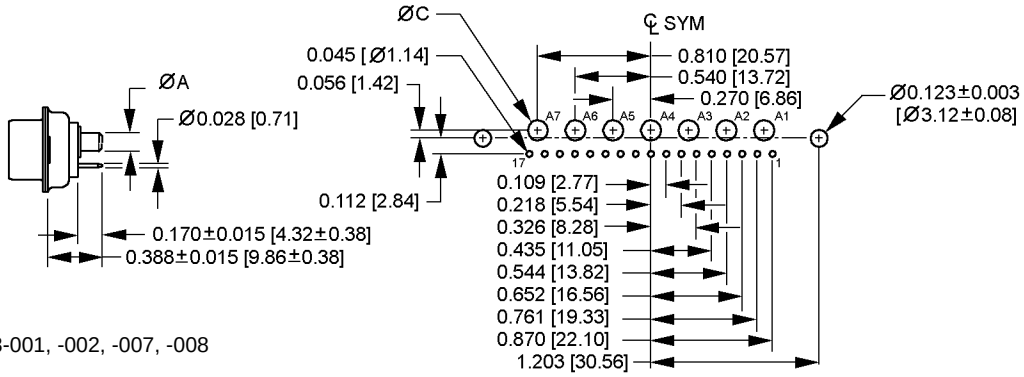

M24308/38-001, -002, -007, -008

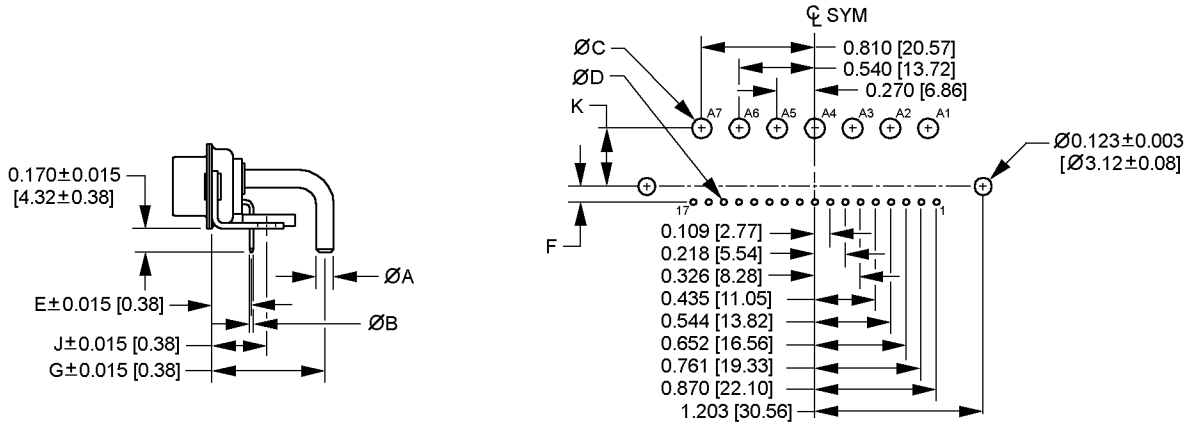

M24308/38-003, -004, -005, -006, -009, -010, -011, -012

24W7

FIGURE 3. Terminations and layout arrangement for power connector.

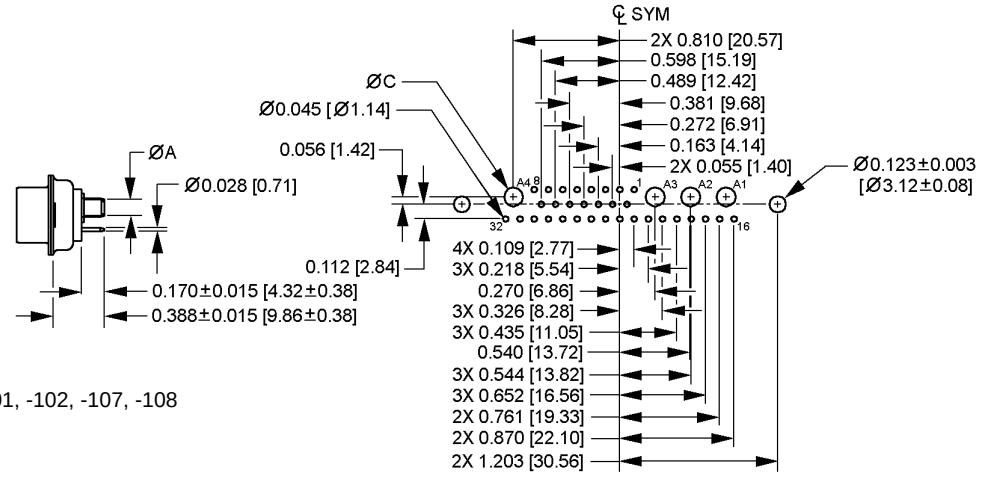

M24308/38-101, -102, -107, -108

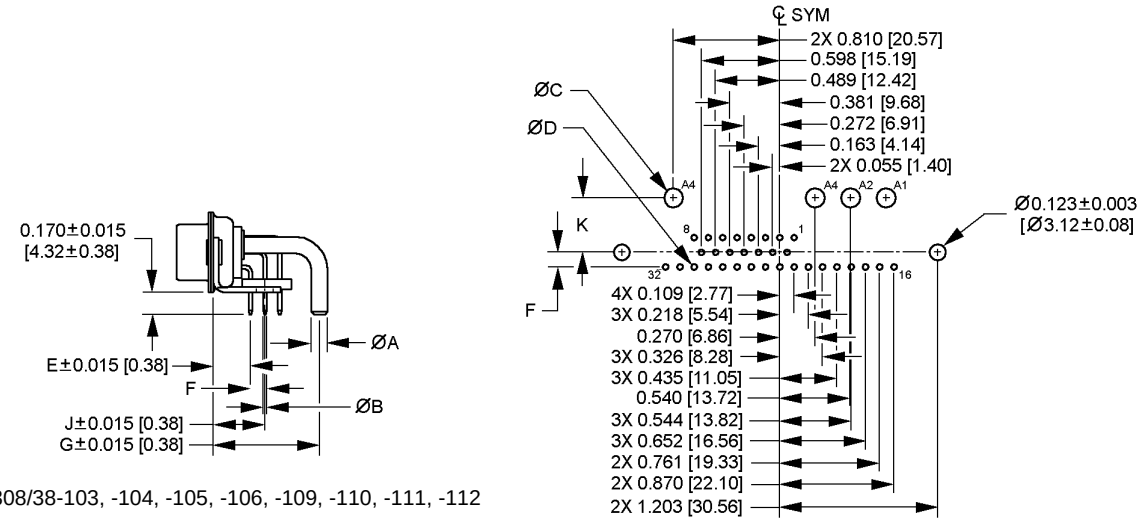

M24308/38-103, -104, -105, -106, -109, -110, -111, -112

36W4

FIGURE 3. Terminations and layout arrangement for power connector - Continued.

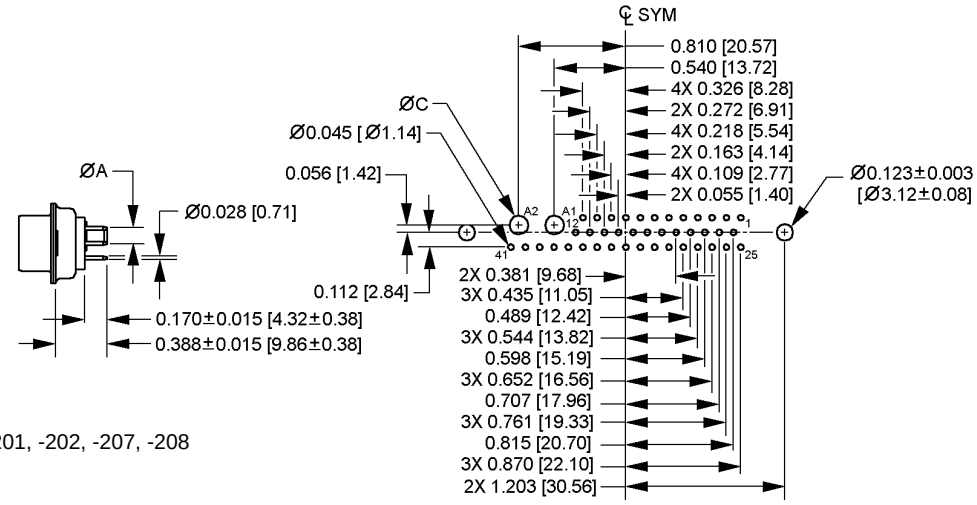

M24308/38-201, -202, -207, -208

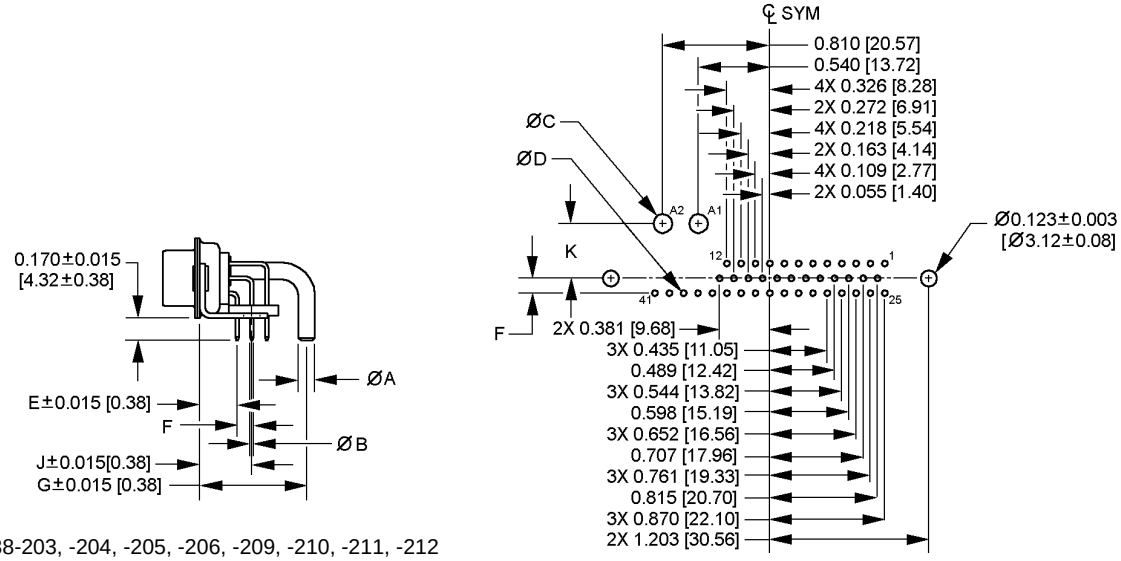

M24308/38-203, -204, -205, -206, -209, -210, -211, -212

43W2

FIGURE 3. Terminations and layout arrangement for power connector - Continued.

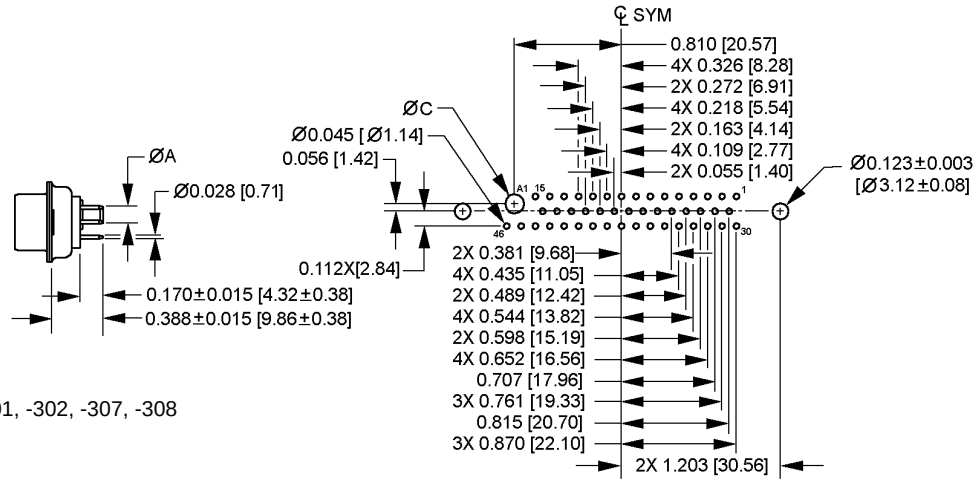

M24308/38-301, -302, -307, -308

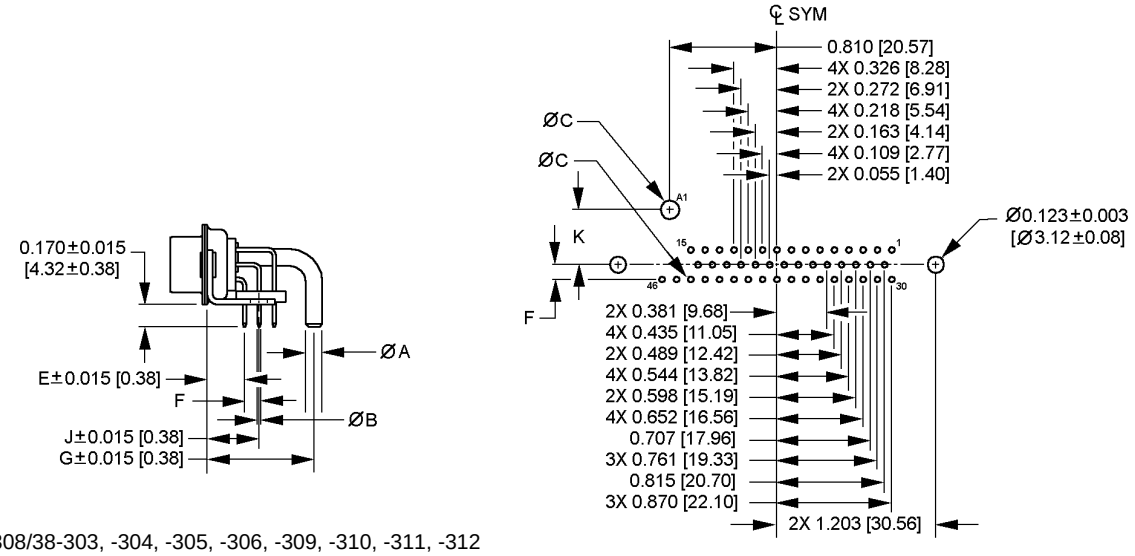

M24308/38-303, -304, -305, -306, -309, -310, -311, -312

47W1

FIGURE 3. Terminations and layout arrangement for power connector - Continued.

PIN M24308/38	ØA	ØB	ØC	D	E	F	G	H	J	K
-001, -002 -101, -102	0.078 (1.98)	---	0.098 (2.49)	---	---	---	---	---	---	---
-007, -008 -107, -108	0.125 (3.18)	---	0.145 (3.68)	---	---	---	---	---	---	---
-003, -004 -113, -114	0.078 (1.98)	---	0.098 (2.49)	---	---	---	0.339 (8.61)	---	0.339 (8.61)	0.000 (0.00)
-009, -010 -109, -110	0.125 (3.18)	---	0.145 (3.68)	---	---	---	0.810 (20.57)	---	0.339 (8.61)	0.471 (11.96)
-005, -006 -105, -106	0.078 (1.98)	---	0.098 (2.49)	---	---	---	0.420 (10.67)	---	0.420 (10.67)	0.000 (0.00)
-011, -012 -111, -112	0.125 (3.18)	---	0.145 (3.68)	---	---	---	0.810 (20.57)	---	0.420 (10.67)	0.390 (9.91)
-201, -202 -301, -302	0.078 (1.98)	0.028 (0.71)	0.098 (2.49)	0.045 (1.14)	---	---	---	---	---	---
-207, -208 -307, -308	0.125 (3.18)	0.028 (0.71)	0.145 (3.68)	0.045 (1.14)	---	---	---	---	---	---
-203, -204 -303, -304	0.078 (1.98)	0.028 (0.71)	0.098 (2.49)	0.045 (1.14)	0.283 (7.19)	0.112 (2.84)	0.339 (8.61)	0.056 (1.42)	0.339 (8.61)	0.000 (0.00)
-209, -110 -309, -310	0.125 (3.18)	0.028 (0.71)	0.145 (3.68)	0.045 (1.14)	0.283 (7.19)	0.112 (2.84)	0.810 (20.57)	0.056 (1.42)	0.339 (8.61)	0.471 (11.96)
-205, -206 -305, -306	0.078 (1.98)	0.024 (0.61)	0.098 (2.49)	0.040 (1.02)	0.370 (9.40)	0.100 (2.54)	0.420 (10.67)	0.050 (1.27)	0.420 (10.67)	0.000 (0.00)
-211, -212 -311, -312	0.125 (3.18)	0.024 (0.61)	0.145 (3.68)	0.040 (1.02)	0.370 (9.40)	0.100 (2.54)	0.810 (20.57)	0.050 (1.27)	0.420 (10.67)	0.390 (9.91)

NOTES:
1. Dimensions are in inches.
2. Metric equivalents are given for information only.
3. Unless otherwise specified, tolerance for three place decimals is ±.005 inch (0.13 mm).

FIGURE 3. Terminations and layout arrangement for power connector - Continued.

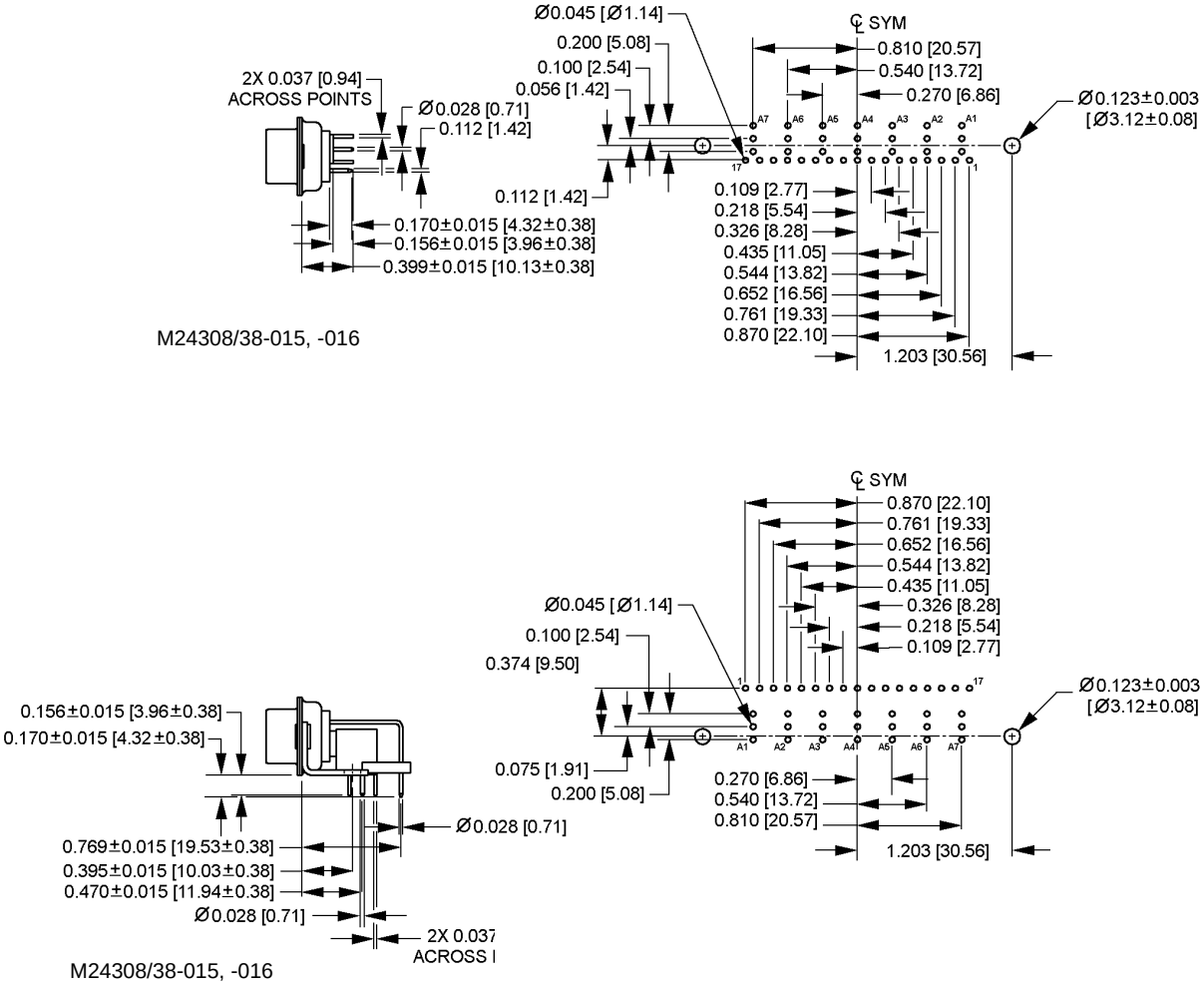

24W7

FIGURE 4. Terminations and layout arrangement for shielded connector.

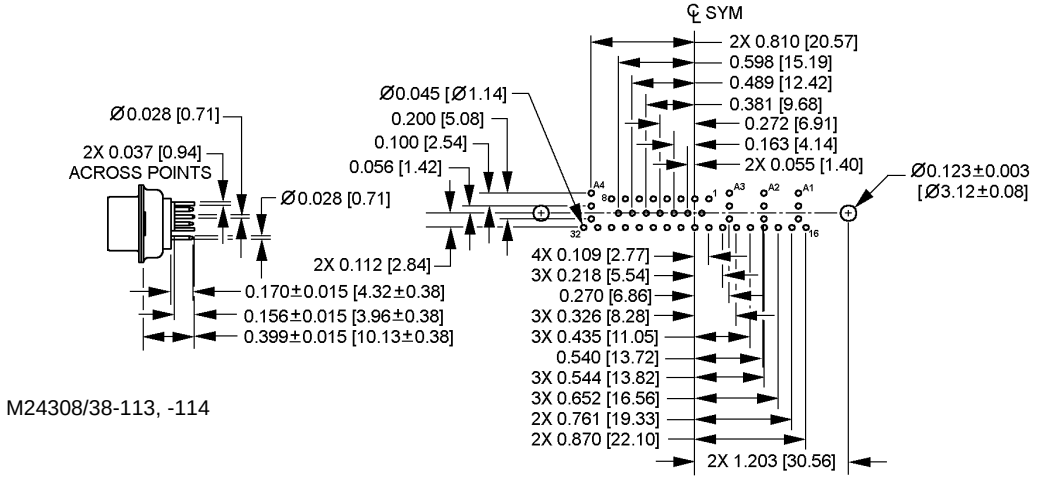

M24308/38-113, -114

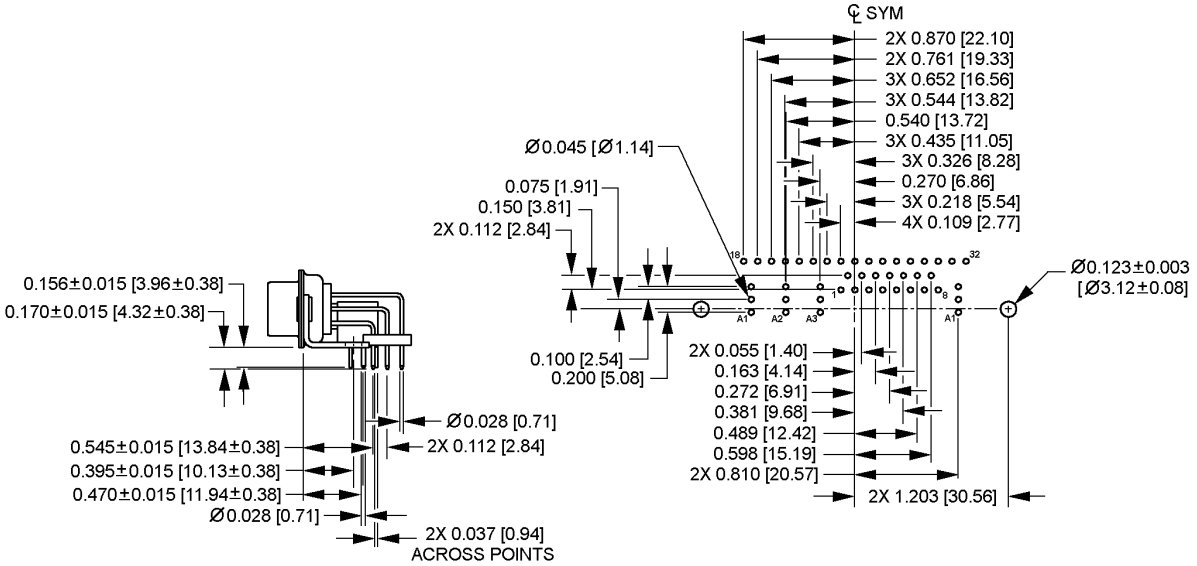

M24308/38-115, -116

36W4

FIGURE 4. Terminations and layout arrangement for shielded connector _ Continued.

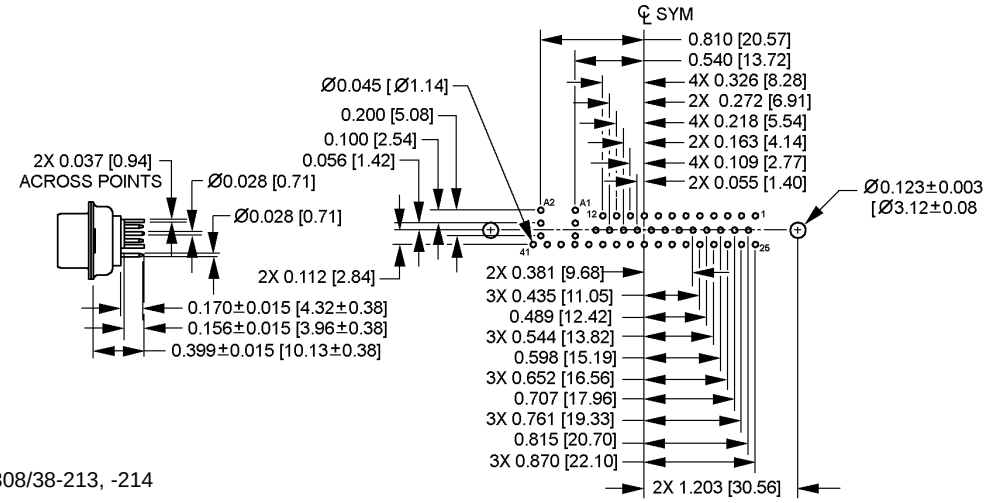

M24308/38-213, -214

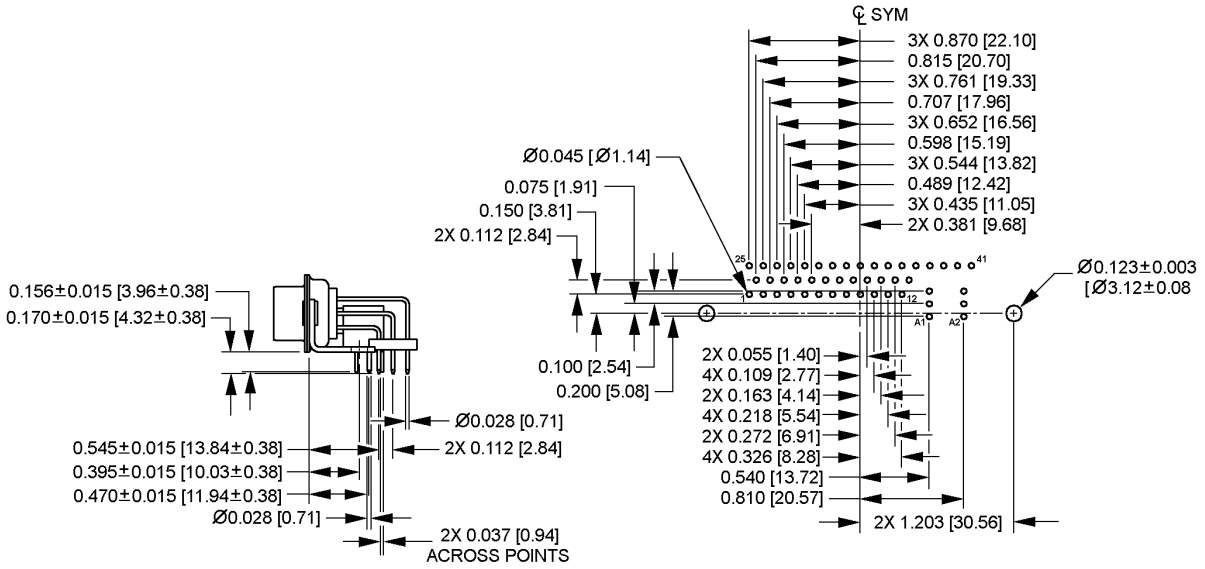

M24308/38-215, -216

43W2

FIGURE 4. Terminations and layout arrangement for shielded connector _ Continued.

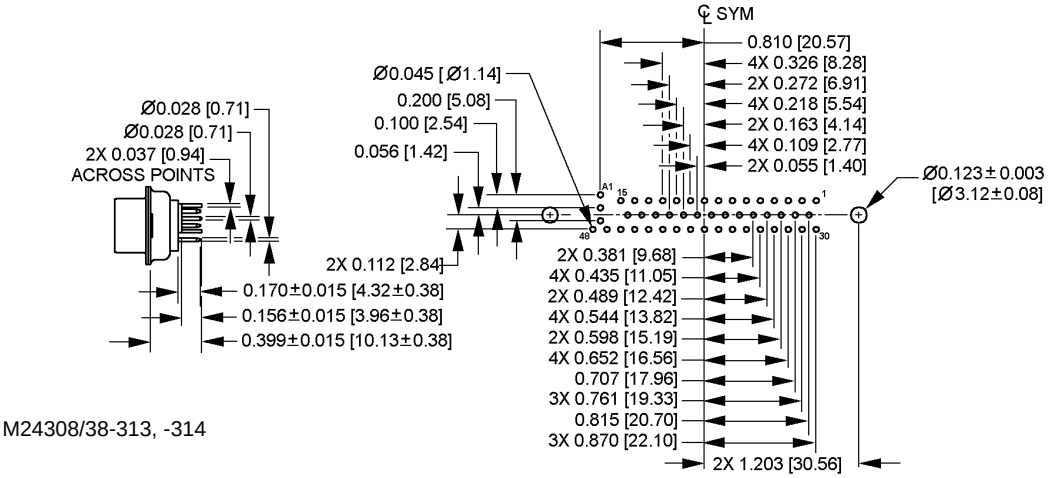

M24308/38-313, -314

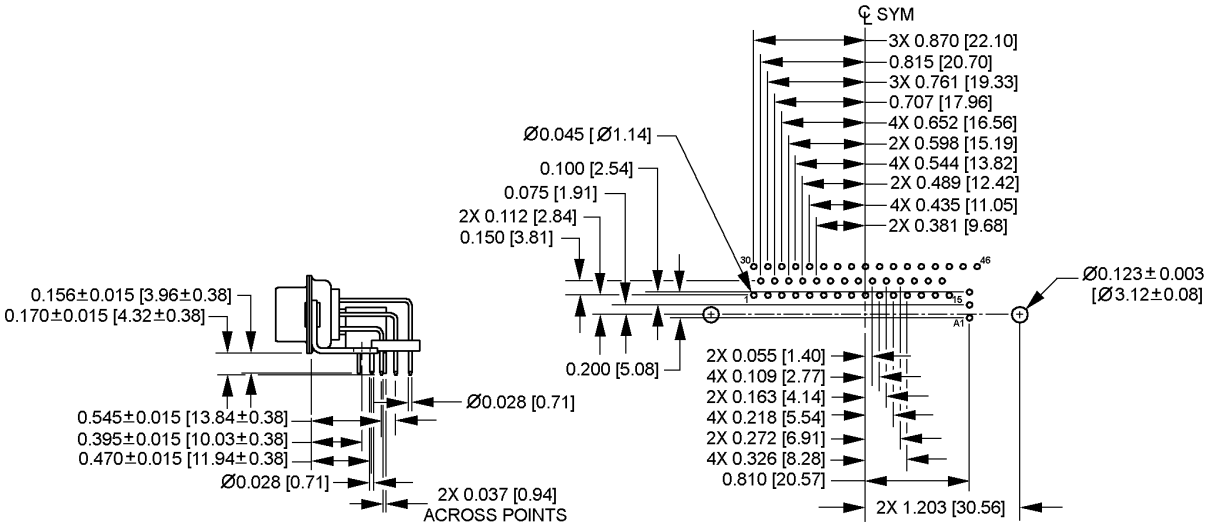

M24308/38-315, -316

47W1

FIGURE 4. Terminations and layout arrangement for shielded connector _ Continued.

Configuration A:

Ø .120 (3.05 mm) mounting hole, straight termination connectors

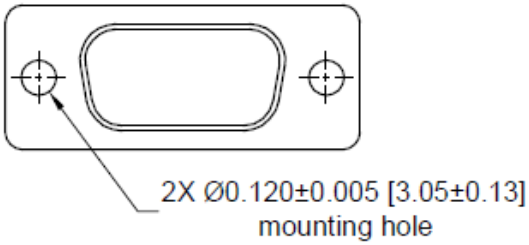

Configuration B and C:

Mounting bracket and threaded rivet, right angle termination connectors

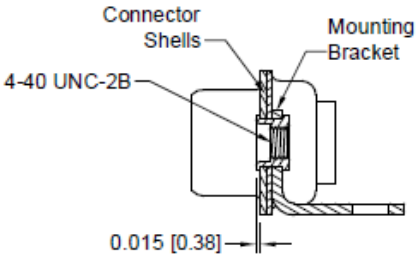

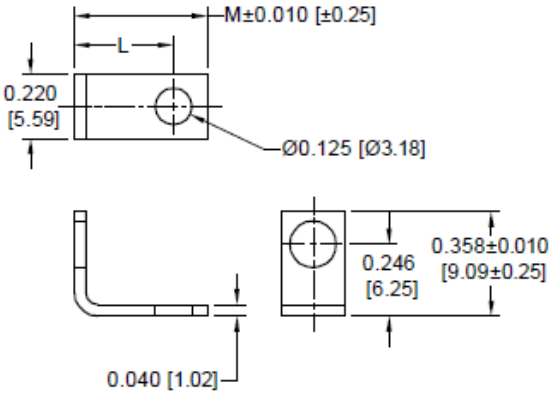

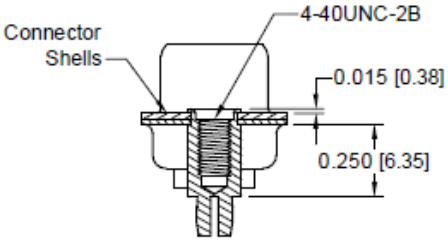

Configuration D:

Swaged spacer with push on fastener, straight termination connectors

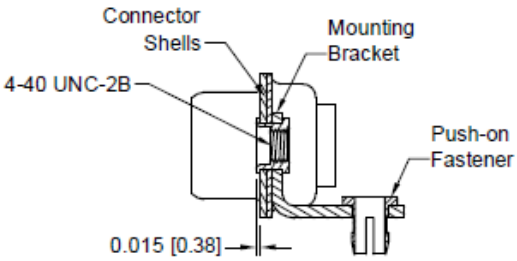

Configuration E and F:

Mounting bracket and threaded rivet with push on fastener, right angle termination connectors

FIGURE 5. Mounting configurations.

Mounting bracket configuration	L	M	Mounting type
B	0.395	0.512	0.125 hole
C	0.470	0.587	0.125 hole
E	0.395	0.456	Fastener
F	0.470	0.587	Fastener

NOTES:
1. Dimensions are in inches.
2. Metric equivalents are given for information only.
3. Unless otherwise specified, tolerance for three place decimals is ±.005 inch (0.13 mm).

FIGURE 5. Mounting configurations - Continued.

REQUIREMENTS:

Dimensions and configurations:

Insert arrangements shall be in accordance with figure 1.

Shell configuration shall be in accordance with figure 2.

Termination and layout arrangement shall be in accordance with figures 3 and 4

Mounting configurations shall be in accordance with figure 5

Materials and finishes:

Mounting brackets half hard brass, UNS-C26000 in accordance with ASTM B36/B36M, zinc plate (0.000050-0.000130 inches) with dichromate seal in accordance with ASTM B633 Type II.

Spacer with push fastener, phosphor bronze, UNS-C54400 in accordance with ASTM B139/B139M.

Finish: Gold in accordance with MIL-DTL-45204, type II, grade C, class 1 or equivalent over copper in accordance with SAE AMS 2418.

Push fastener with mounting brackets, beryllium copper, UNS-C17300 in accordance with ASTM B196/B196M.

Finish: Gold in accordance with MIL-DTL-45204, type II, grade C, class 1 or equivalent over copper in accordance with SAE AMS 2418.

Electrical:

Size 20 signal contacts:

Current rating:	7.5 amps nominal
Initial contact resistance:	.008 ohms maximum
Proof voltage:	1000 V r.m.s.

Power contacts:

.078 dia:	10 amps
.125 dia:	40 amps
Initial contact resistance:	.0005 ohms maximum

Shielded contacts:

Nominal impedance:	50 ohms
Insertion loss:	-0.46 dB at 1 GHz
	-1.5 dB at 2 GHz
VSWR:	1.15 average at 1 GHz
	1.56 average at 2 GHz
Proof voltage:	1000 V r.m.s

Initial contact resistance: .008 ohms maximum

TABLE I. PIN and dash numbers.

PIN	Insert arrangement (see figure 1)	Size 8 contact	Termination type	Mounting configuration (see figure 5)
M24308/38-001	24W7	0.078	Straight	A
M24308/38-002		0.078	Straight	D
M24308/38-003		0.078	Right angle	B
M24308/38-004		0.078	Right angle	E
M24308/38-005		0.078	Right angle	C
M24308/38-006		0.078	Right angle	F
M24308/38-007		0.125	Straight	A
M24308/38-008		0.125	Straight	D
M24308/38-009		0.125	Right angle	B
M24308/38-010		0.125	Right angle	E
M24308/38-011		0.125	Right angle	C
M24308/38-012		0.125	Right angle	F
M24308/38-013		Shielded	Straight	A
M24308/38-014		Shielded	Straight	D
M24308/38-015		Shielded	Right angle	B
M24308/38-016		Shielded	Right angle	E

TABLE I. PIN and dash numbers - Continued.

PIN	Insert arrangement (see figure 1)	Size 8 contact	Termination type	Mounting configuration (see figure 5)
M24308/38-101	36W4	0.078	Straight	A
M24308/38-102		0.078	Straight	D
M24308/38-103		0.078	Right angle	B
M24308/38-104		0.078	Right angle	E
M24308/38-105		0.078	Right angle	C
M24308/38-106		0.078	Right angle	F
M24308/38-107		0.125	Straight	A
M24308/38-108		0.125	Straight	D
M24308/38-109		0.125	Right angle	B
M24308/38-110		0.125	Right angle	E
M24308/38-111		0.125	Right angle	C
M24308/38-112		0.125	Right angle	F
M24308/38-113		Shielded	Straight	A
M24308/38-114		Shielded	Straight	D
M24308/38-115		Shielded	Right angle	B
M24308/38-116		Shielded	Right angle	E

TABLE I. PIN and dash numbers - Continued.

PIN	Insert arrangement (see figure 1)	Size 8 contact	Termination type	Mounting configuration (see figure 5)
M24308/38-201	43W2	0.078	Straight	A
M24308/38-202		0.078	Straight	D
M24308/38-203		0.078	Right angle	B
M24308/38-204		0.078	Right angle	E
M24308/38-205		0.078	Right angle	C
M24308/38-206		0.078	Right angle	F
M24308/38-207		0.125	Straight	A
M24308/38-208		0.125	Straight	D
M24308/38-209		0.125	Right angle	B
M24308/38-210		0.125	Right angle	E
M24308/38-211		0.125	Right angle	C
M24308/38-212		0.125	Right angle	F
M24308/38-213		Shielded	Straight	A
M24308/38-214		Shielded	Straight	D
M24308/38-215		Shielded	Right angle	B
M24308/38-216		Shielded	Right angle	E

TABLE I. PIN and dash numbers - Continued.

PIN	Insert arrangement (see figure 1)	Size 8 contact	Termination type	Mounting configuration (see figure 5)
M24308/38-301	47W1	0.078	Straight	A
M24308/38-302		0.078	Straight	D
M24308/38-303		0.078	Right angle	B
M24308/38-304		0.078	Right angle	E
M24308/38-305		0.078	Right angle	C
M24308/38-306		0.078	Right angle	F
M24308/38-307		0.125	Straight	A
M24308/38-308		0.125	Straight	D
M24308/38-309		0.125	Right angle	B
M24308/38-310		0.125	Right angle	E
M24308/38-311		0.125	Right angle	C
M24308/38-312		0.125	Right angle	F
M24308/38-313		Shielded	Straight	A
M24308/38-314		Shielded	Straight	D
M24308/38-315		Shielded	Right angle	B
M24308/38-316		Shielded	Right angle	E

PIN example: M24308/38 -310 F G

Specification sheet number:

Dash number from table I:

Finish:

A = Pure electrodeposited aluminum. 1/
F = Cadmium. 1/
K = Zinc nickel. 1/
P = Passivated stainless steel. 1/
T = Nickel Fluorocarbon Polymer. 1/
Z = zinc. 1/
- = nickel 2/ or gold 3/

Class:

G, N, D or M (See MIL-DTL-24308)

NOTES:

1/ Finish for class G or N.
2/ Finish for class D.
3/ Finish for class M.

Referenced documents. In addition to MIL-DTL-24308, this document references the following:

MIL-DTL-45204
ASTM B36/B36M
ASTM B139/B139M
ASTM B196/B196M
ASTM B633
SAE AMS 2418

CONCLUDING MATERIAL

Custodians:
Army - CR
Navy - EC
Air Force – 85
NASA - NA
DLA - CC

Review activities:
Army - AT, CR4, MI
Navy - AS, CG, MC, SH
Air Force – 99
MISC - MDA

Preparing activity:
DLA - CC

(Project: 5935-2014-092)

NOTE: The activities listed above were interested in this document as of the date of this document. Since organizations and responsibilities can change, you should verify the currency of the information above using the ASSIST Online database at https://assist.dla.mil/ .