INCH-POUND
MIL-DTL-24308/23G
w/AMENDMENT 4
1 April 2015
SUPERSEDING
w/AMENDMENT 3
12 June 2014

DETAIL SPECIFICATION SHEET

CONNECTORS, ELECTRIC, RECTANGULAR, NONENVIRONMENTAL, MINIATURE, POLARIZED SHELL, RACK AND PANEL, SOCKET CONTACTS PRINTED WIRING BOARD TERMINATION TYPES

This specification is approved for use by all Departments and Agencies of the Department of Defense.

The requirements for acquiring the product described herein shall consist of this specification sheet and MIL-DTL-24308.

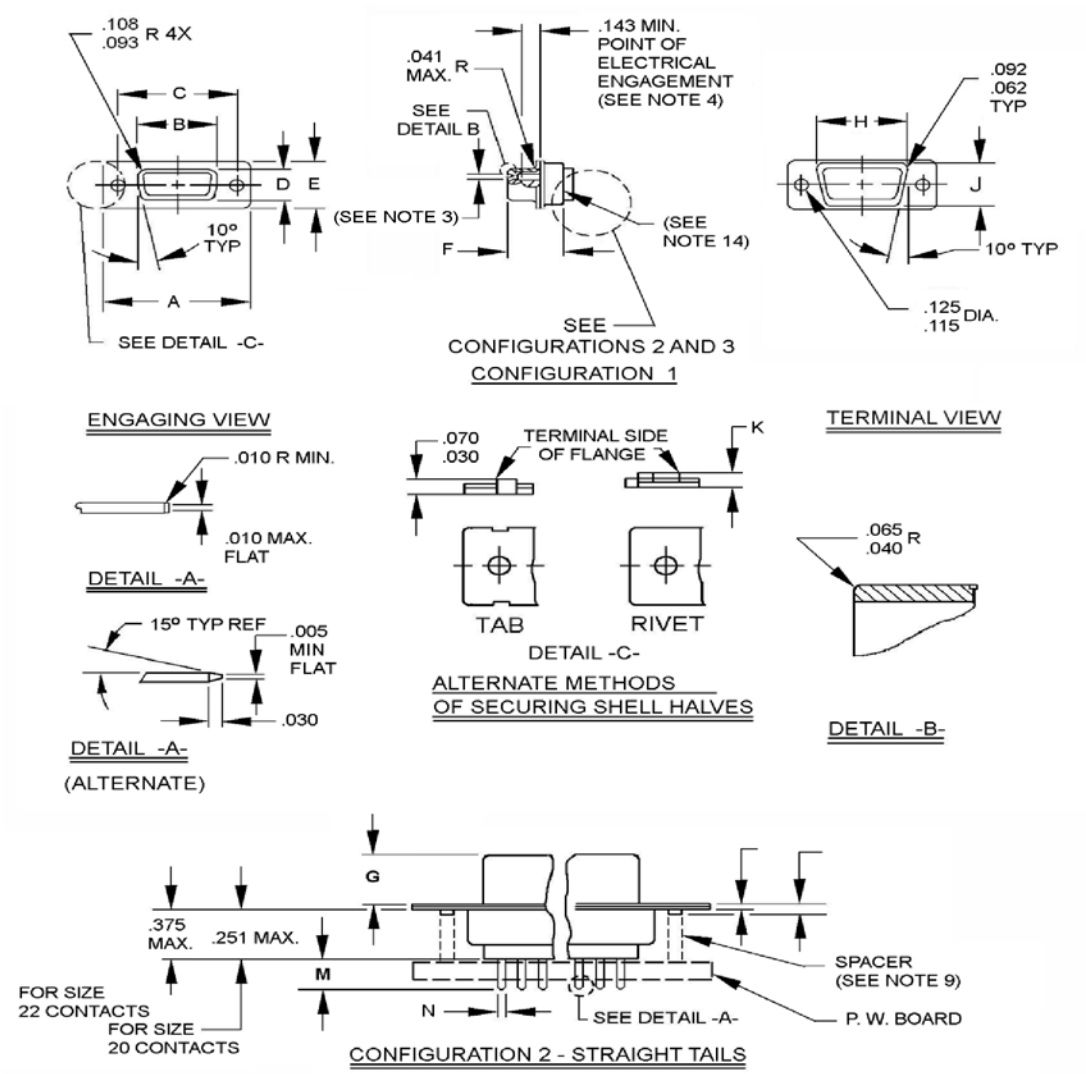

FIGURE 1. Shell, receptacle, printed wiring board type.

AMSC N/A

FSC 5935

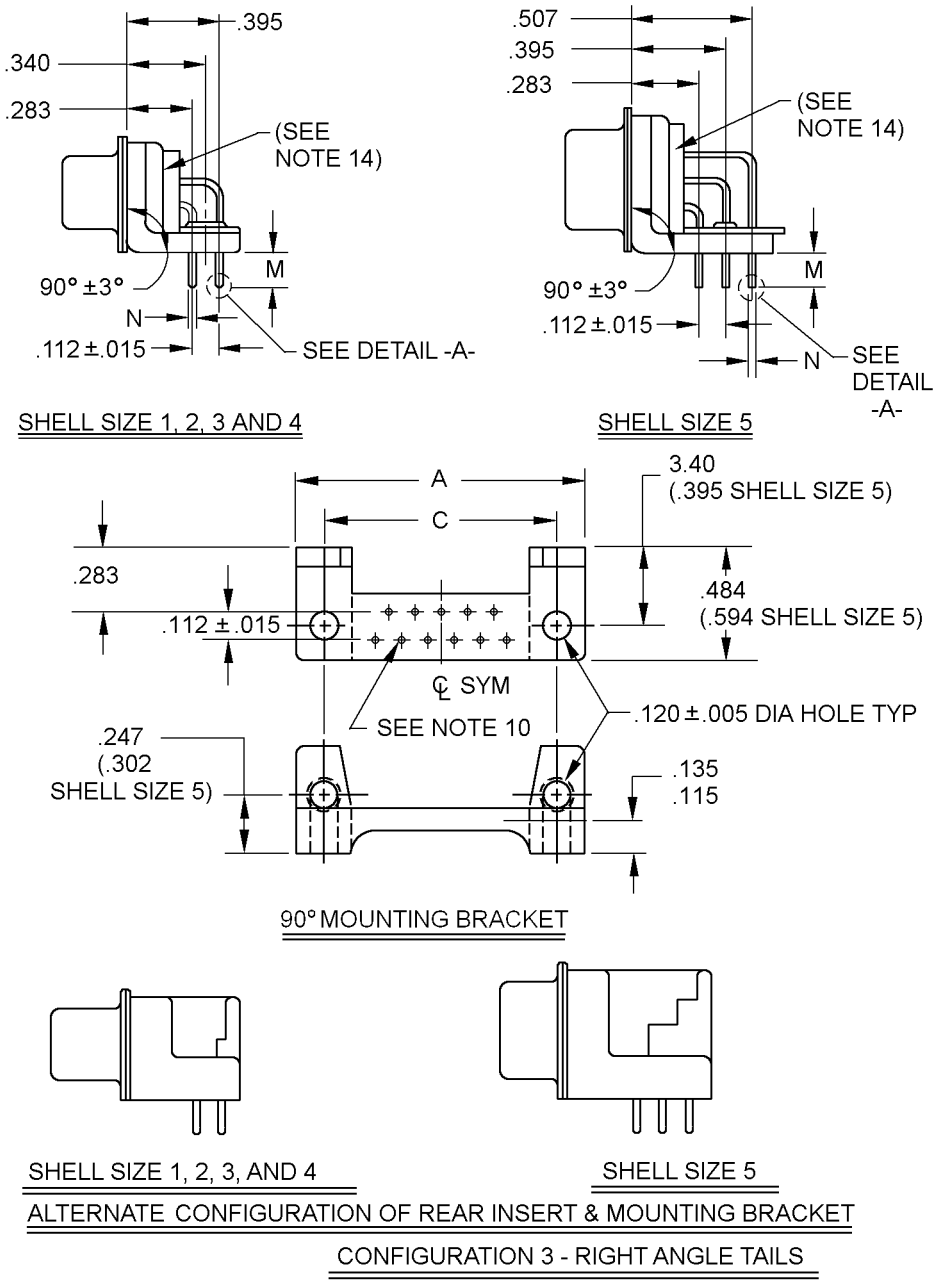

FIGURE 1. Shell, receptacle, printed wiring board – Continued.

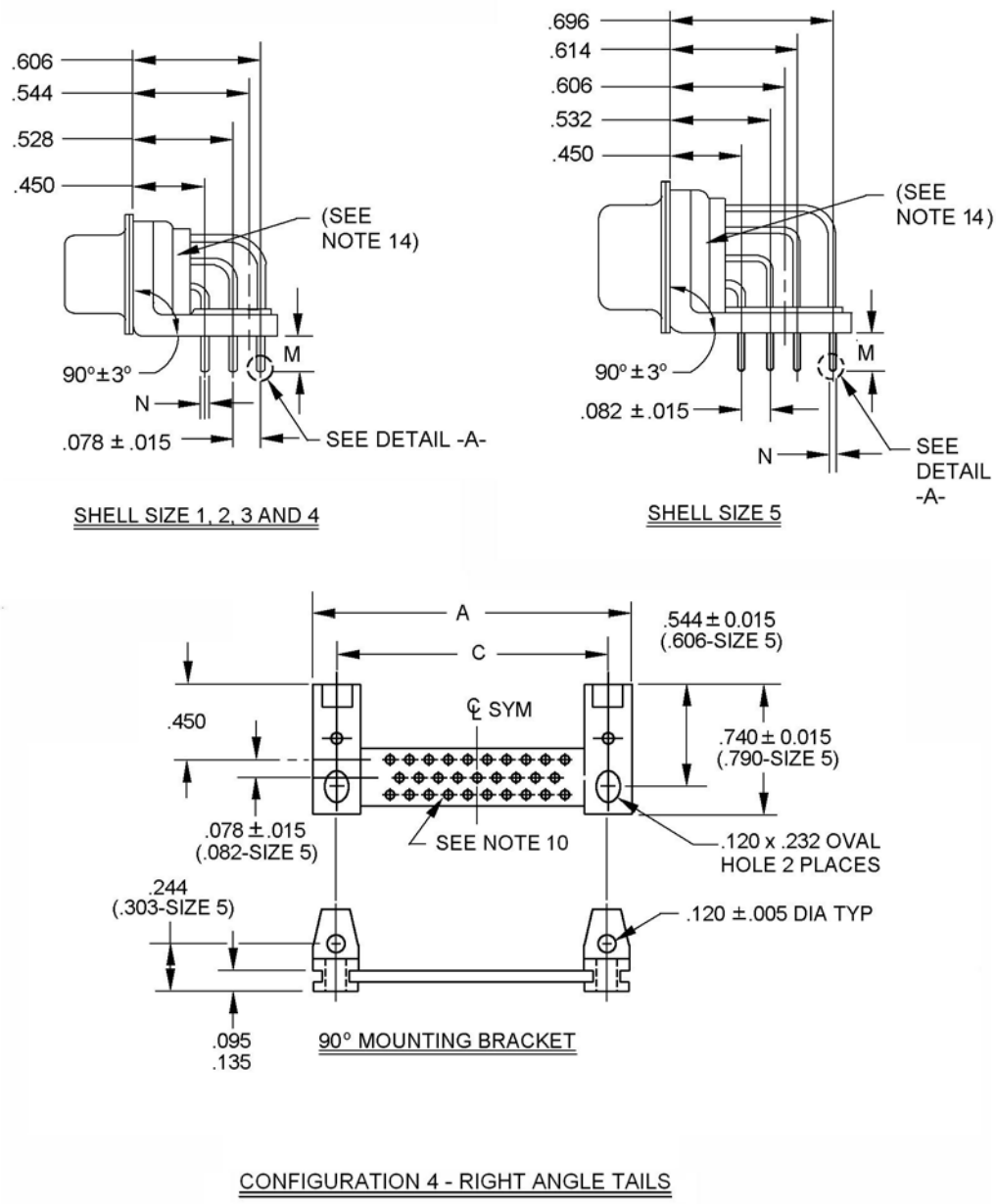

FIGURE 1. Shell, receptacle, printed wiring board – Continued.

Dimensions and configurations

Shell Size	A	B	C	D	E	F	G	H	J	K	L
1	1.228 (31.19) 1.198 (30.43)	.648 (16.46) .638 (16.21)	.989 (25.12) .979 (24.87)	.316 (8.03) .306 (7.77)	.509 (12.93) .479 (12.17)	.439 (11.15) .419 (10.64)	.248 (6.30) .238 (6.05)	.769 (19.53) .749 (19.02)	.432 (10.97) .412 (10.46)	.060 (1.52) .035 (0.89)	.040 (1.02) .020 (0.51)
2	1.556 (39.52) 1.526 (38.76)	.976 (24.79) .966 (24.54)	1.317 (33.45) 1.307 (33.20)	.316 (8.03) .306 (7.77)	.509 (12.93) .479 (12.17)	.439 (11.15) .419 (10.64)	.248 (6.30) .238 (6.05)	1.093 (27.76) 1.073 (27.25)	.432 (10.97) .412 (10.46)	.060 (1.52) .035 (0.89)	.040 (1.02) .020 (0.51)
3	2.103 (53.42) 2.073 (52.65)	1.516 (38.51) 1.506 (38.25)	1.857 (47.17) 1.847 (46.91)	.316 (8.03) .306 (7.77)	.509 (12.93) .479 (12.17)	.439 (11.15) .419 (10.64)	.248 (6.30) .238 (6.05)	1.635 (41.53) 1.615) (41.02)	.432 (10.97) .412 (10.46)	.060 (1.52) .035 (0.89)	.049 (1.24) .029 (0.74)
4	2.744 (69.70) 2.714 (68.94)	2.164 (54.97) 2.154 (54.71)	2.505 (63.63) 2.495 (63.37)	.316 (8.03) .306 (7.77)	.509 (12.93) .479 (12.17)	.439 (11.15) .419 (10.64)	.248 (6.30) .238 (6.05)	2.282 (57.96) 2.262 (57.45)	.432 (10.97) .412 (10.46)	.060 (1.52) .035 (0.89)	.049 (1.24) .029 (0.74)
5	2.650 (67.31) 2.620 (66.55)	2.069 (52.55) 2.059 (52.30	2.411 (61.24) 2.401 (60.99)	.428 (10.87) .418 (10.62)	.620 (15.75) .590 (14.99)	.439 (11.15) .419 (10.64)	.248 (6.30) .238 (6.05)	2.188 (55.58) 2.168 (55.07)	.544 (13.82) .524 (13.31)	.060 (1.52) .035 (0.89)	.049 (1.24) .029 (0.74)

Application data and dimensions.

Applicable dash number M24308/23	Applicable Configurations	Applicable board thickness	Nominal pin diameter	M	N
-1 through –5 (See note 15)	1 and 2	.094 (2.39 mm)	.030 (0.76 mm)	.185 (4.70 mm) .130 (3.30 mm)	.033 (0.84 mm) .027 (0.69 mm)
-7 through –11 (See note 15)	1 and 2	.125 (3.18 mm)	.030 (0.76 mm)	.210 (5.33 mm) .155 (3.94 mm)	.033 (0.84 mm) .027 (0.69 mm)
-13 through –17 (See note 15)	1 and 2	.094 (2.39 mm)	.040 (1.02 mm)	.185 (4.70 mm) .130 (3.30 mm)	.043 (1.09 mm) .037 (0.94 mm)
-19 through –23 (See note 15)	1 and 2	.125 (3.18 mm)	.040 (1.02 mm)	.210 (5.33 mm) .155 (3.94 mm)	.043 (1.09 mm) .037 (0.94 mm)
-25 through –29 (See note 15)	1 and 3	.062 (1.57 mm)	.030 (0.76 mm)	.154 (3.91 mm) .099 (2.51 mm)	.033 (0.84 mm) .027 (0.69 mm)
-31 through –35 (See note 15)	1 and 3	.094 (2.39 mm)	.030 (0.76 mm)	.185 (4.70 mm) .130 (3.30 mm)	.033 (0.84 mm) .027 (0.69 mm)
-37 through –41 (See note 15)	1 and 3	.062 (1.57 mm)	.040 (1.02 mm)	.154 (3.91 mm) .099 (2.51 mm)	.043 (1.09 mm) .037 (0.94 mm)
-43 through –47 (See note 15)	1 and 3	.094 (2.39 mm)	.040 (1.02 mm)	.185 (4.70 mm) .130 (3.30 mm)	.043 (1.09 mm) .037 (0.94 mm)
-49 through –53 (See note 15)	1 and 3	.125 (3.18 mm)	.030 (0.76 mm)	.210 (5.33 mm) .155 (3.94 mm)	.033 (0.84 mm) .027 (0.69 mm)
-55 through –59 (See note 15)	1 and 3	.125 (3.18 mm)	.040 (1.02 mm)	.210 (5.33 mm) .155 (3.94 mm)	.043 (1.09 mm) .037 (0.94 mm)
-61 through –65 (See note 15)	1 and 2	.094 (2.39 mm)	.020 (0.51 mm)	.185 (4.70 mm) .130 (3.30 mm)	.023 (0.58 mm) .017 (0.43 mm)
-67 through –71 (See note 15)	1 and 2	.125 (3.18 mm)	.020 (0.51 mm)	.320 (8.13 mm) .275 (6.99 mm)	.023 (0.58 mm) .017 (0.43 mm)
-73 through –77 (See note 15)	1 and 4	.062 (1.57 mm)	.020 (0.51 mm)	.154 (3.91 mm) .099 (2.51 mm)	.023 (0.58 mm) .017 (0.43 mm)

FIGURE 1. Shell, receptacle, printed wiring board type - Continued.

Inches	mm	Inches	mm	Inches	mm
.005	0.13	.092	2.34	.247	6.27
.010	0.25	.097	2.46	.251	6.38
.015	0.38	.103	2.62	.283	7.19
.030	0.76	.112	2.84	.302	7.67
.040	1.02	.115	2.92	.340	8.64
.041	1.04	.120	3.05	.395	10.03
.062	1.57	.125	3.18	.484	12.29
.065	1.65	.135	3.43	.507	12.88
.070	1.78	.149	3.78	.594	15.09

NOTES:
1. Dimensions are in inches.
2. Metric equivalents are given for information only.
3. Socket contact shall accommodate .041/.039 (1.04/0.99 mm) diameter pin for size 20 contacts and .0305/.0295 (.775/.749 mm) diameter pin for size 22D contacts.
4. Point of electrical engagement. Use .0393/.0390 (0.998/0.990 mm) diameter square ended test pin.
5. Applicable insert patterns see MIL-DTL-24308, appendix A.
6. Copyright notice. All information disclosed in this military specification sheet which is or may be copyrighted by ITT Cannon Electric is reproduced herein with the expressed permission of the copyright owner.
7. The 90 ° bracket shall be one piece flame resistant glass-filled nylon, polyester or two piece metal and nylon of which the metal pieces shall be coated with a material in accordance with IPC-CC-830.
8. The 90 ° bracket shall be furnished as an integral part of the connector assembly.
9. Spacers will be supplied with connectors (not attached to the connector).
10. Layout shown for reference only to locate C_L. See applicable insert arrangement.
11. Unless otherwise specified, tolerance is ± .010 inch (0.25 mm).
12. In the event of a conflict between the text of this specification sheet and the references cited herein, the text of this specification sheet shall take precedence.
13. Referenced Governments documents of the issue listed in ASSIST Online database at https://assist.dla.mil/ specified in the solicitation form a part of this standard to the extent specified herein.
14. Indentation on the ends of the termination side of the shell, for the purpose of securing the insulator in the shell, is permitted. This may result in the “F” dimension being undersized in these areas. However the “F” dimension shall be maintained for the remainder of the connector.
15. For classes M, N and D use table I for applicable dash numbers.

FIGURE 1. Shell, receptacle, printed wiring board type - Continued.

REQUIREMENTS:

The connectors shall conform to figure 1 and the specification Part or Identifying Numbers (PIN) indicated in table I.

TABLE I. Design standards. 1/

PIN Class G	PIN Class M	PIN Class N	PIN Class D	Shell size	Shell detail configurations	Insert arrangement reference number 2/	Contact	
							Mating end	PWB tail
M24308/23-1	M24308/23-101	M24308/23-201	M24308/23-301	1	1 and 2	A-1-1	Size 20	Straight
M24308/23-2	M24308/23-102	M24308/23-202	M24308/23-302	2	1 and 2	A-2-1	Size 20	Straight
M24308/23-3	M24308/23-103	M24308/23-203	M24308/23-303	3	1 and 2	A-3-1	Size 20	Straight
M24308/23-4	M24308/23-104	M24308/23-204	M24308/23-304	4	1 and 2	A-4-1	Size 20	Straight
M24308/23-5	M24308/23-105	M24308/23-205	M24308/23-305	5	1 and 2	A-5-1	Size 20	Straight
M24308/23-7	M24308/23-107	M24308/23-207	M24308/23-307	1	1 and 2	A-1-1	Size 20	Straight
M24308/23-8	M24308/23-108	M24308/23-208	M24308/23-308	2	1 and 2	A-2-1	Size 20	Straight
M24308/23-9	M24308/23-109	M24308/23-209	M24308/23-309	3	1 and 2	A-3-1	Size 20	Straight
M24308/23-10	M24308/23-110	M24308/23-210	M24308/23-310	4	1 and 2	A-4-1	Size 20	Straight
M24308/23-11	M24308/23-111	M24308/23-211	M24308/23-311	5	1 and 2	A-5-1	Size 20	Straight
M24308/23-13	M24308/23-113	M24308/23-213	M24308/23-313	1	1 and 2	A-1-1	Size 20	Straight
M24308/23-14	M24308/23-114	M24308/23-214	M24308/23-314	2	1 and 2	A-2-1	Size 20	Straight
M24308/23-15	M24308/23-115	M24308/23-215	M24308/23-315	3	1 and 2	A-3-1	Size 20	Straight
M24308/23-16	M24308/23-116	M24308/23-216	M24308/23-316	4	1 and 2	A-4-1	Size 20	Straight
M24308/23-17	M24308/23-117	M24308/23-217	M24308/23-317	5	1 and 2	A-5-1	Size 20	Straight
M24308/23-19	M24308/23-119	M24308/23-219	M24308/23-319	1	1 and 2	A-1-1	Size 20	Straight
M24308/23-20	M24308/23-120	M24308/23-220	M24308/23-320	2	1 and 2	A-2-1	Size 20	Straight
M24308/23-21	M24308/23-121	M24308/23-221	M24308/23-321	3	1 and 2	A-3-1	Size 20	Straight
M24308/23-22	M24308/23-122	M24308/23-222	M24308/23-322	4	1 and 2	A-4-1	Size 20	Straight
M24308/23-23	M24308/23-123	M24308/23-223	M24308/23-323	5	1 and 2	A-5-1	Size 20	Straight
M24308/23-25	M24308/23-125	M24308/23-225	M24308/23-325	1	1 and 3	A-1-1	Size 20	Rt Angle
M24308/23-26	M24308/23-126	M24308/23-226	M24308/23-326	2	1 and 3	A-2-1	Size 20	Rt Angle
M24308/23-27	M24308/23-127	M24308/23-227	M24308/23-327	3	1 and 3	A-3-1	Size 20	Rt Angle
M24308/23-28	M24308/23-128	M24308/23-228	M24308/23-328	4	1 and 3	A-4-1	Size 20	Rt Angle
M24308/23-29	M24308/23-129	M24308/23-229	M24308/23-329	5	1 and 3	A-5-1	Size 20	Rt Angle
M24308/23-31	M24308/23-131	M24308/23-231	M24308/23-331	1	1 and 3	A-1-1	Size 20	Rt Angle
M24308/23-32	M24308/23-132	M24308/23-232	M24308/23-332	2	1 and 3	A-2-1	Size 20	Rt Angle
M24308/23-33	M24308/23-133	M24308/23-233	M24308/23-333	3	1 and 3	A-3-1	Size 20	Rt Angle
M24308/23-34	M24308/23-134	M24308/23-234	M24308/23-334	4	1 and 3	A-4-1	Size 20	Rt Angle
M24308/23-35	M24308/23-135	M24308/23-235	M24308/23-335	5	1 and 3	A-5-1	Size 20	Rt Angle
M24308/23-37	M24308/23-137	M24308/23-237	M24308/23-337	1	1 and 3	A-1-1	Size 20	Rt Angle
M24308/23-38	M24308/23-138	M24308/23-238	M24308/23-338	2	1 and 3	A-2-1	Size 20	Rt Angle
M24308/23-39	M24308/23-139	M24308/23-239	M24308/23-339	3	1 and 3	A-3-1	Size 20	Rt Angle
M24308/23-40	M24308/23-140	M24308/23-240	M24308/23-340	4	1 and 3	A-4-1	Size 20	Rt Angle
M24308/23-41	M24308/23-141	M24308/23-241	M24308/23-341	5	1 and 3	A-5-1	Size 20	Rt Angle
M24308/23-43	M24308/23-143	M24308/23-243	M24308/23-343	1	1 and 3	A-1-1	Size 20	Rt Angle
M24308/23-44	M24308/23-144	M24308/23-244	M24308/23-344	2	1 and 3	A-2-1	Size 20	Rt Angle
M24308/23-45	M24308/23-145	M24308/23-245	M24308/23-345	3	1 and 3	A-3-1	Size 20	Rt Angle
M24308/23-46	M24308/23-146	M24308/23-246	M24308/23-346	4	1 and 3	A-4-1	Size 20	Rt Angle
M24308/23-47	M24308/23-147	M24308/23-247	M24308/23-347	5	1 and 3	A-5-1	Size 20	Rt Angle

See footnotes at end of table.

TABLE I. Design standards - Continued. 1/

PIN Class G	PIN Class M	PIN Class N	PIN Class D	Shell size	Shell detail configurations	Insert arrangement reference number 2/	Contact	
							Mating end	PWB tail
M24308/23-49	M24308/23-149	M24308/23-249	M24308/23-349	1	1 and 3	A-1-1	Size 20	Rt Angle
M24308/23-50	M24308/23-150	M24308/23-250	M24308/23-350	2	1 and 3	A-2-1	Size 20	Rt Angle
M24308/23-51	M24308/23-151	M24308/23-251	M24308/23-351	3	1 and 3	A-3-1	Size 20	Rt Angle
M24308/23-52	M24308/23-152	M24308/23-252	M24308/23-352	4	1 and 3	A-4-1	Size 20	Rt Angle
M24308/23-53	M24308/23-153	M24308/23-253	M24308/23-353	5	1 and 3	A-5-1	Size 20	Rt Angle
M24308/23-55	M24308/23-155	M24308/23-255	M24308/23-355	1	1 and 3	A-1-1	Size 20	Rt Angle
M24308/23-56	M24308/23-156	M24308/23-256	M24308/23-356	2	1 and 3	A-2-1	Size 20	Rt Angle
M24308/23-57	M24308/23-157	M24308/23-257	M24308/23-357	3	1 and 3	A-3-1	Size 20	Rt Angle
M24308/23-58	M24308/23-158	M24308/23-258	M24308/23-358	4	1 and 3	A-4-1	Size 20	Rt Angle
M24308/23-59	M24308/23-159	M24308/23-259	M24308/23-359	5	1 and 3	A-5-1	Size 20	Rt Angle
M24308/23-61	M24308/23-161	M24308/23-261	M24308/23-361	1	1 and 2	A-1-2	Size 22	Straight
M24308/23-62	M24308/23-162	M24308/23-262	M24308/23-362	2	1 and 2	A-2-2	Size 22	Straight
M24308/23-63	M24308/23-163	M24308/23-263	M24308/23-363	3	1 and 2	A-3-2	Size 22	Straight
M24308/23-64	M24308/23-164	M24308/23-264	M24308/23-364	4	1 and 2	A-4-2	Size 22	Straight
M24308/23-65	M24308/23-165	M24308/23-265	M24308/23-365	5	1 and 2	A-5-2	Size 22	Straight
M24308/23-67	M24308/23-167	M24308/23-267	M24308/23-367	1	1 and 2	A-1-2	Size 22	Straight
M24308/23-68	M24308/23-168	M24308/23-268	M24308/23-368	2	1 and 2	A-2-2	Size 22	Straight
M24308/23-69	M24308/23-169	M24308/23-269	M24308/23-369	3	1 and 2	A-3-2	Size 22	Straight
M24308/23-70	M24308/23-170	M24308/23-270	M24308/23-370	4	1 and 2	A-4-2	Size 22	Straight
M24308/23-71	M24308/23-171	M24308/23-271	M24308/23-371	5	1 and 2	A-5-2	Size 22	Straight
M24308/23-73	M24308/23-173	M24308/23-273	M24308/23-373	1	1 and 4	A-1-2	Size 22	Rt Angle
M24308/23-74	M24308/23-174	M24308/23-274	M24308/23-374	2	1 and 4	A-2-2	Size 22	Rt Angle
M24308/23-75	M24308/23-175	M24308/23-275	M24308/23-375	3	1 and 4	A-3-2	Size 22	Rt Angle
M24308/23-76	M24308/23-176	M24308/23-276	M24308/23-376	4	1 and 4	A-4-2	Size 22	Rt Angle
M24308/23-77	M24308/23-177	M24308/23-277	M24308/23-377	5	1 and 4	A-5-2	Size 22	Rt Angle

1/ These connectors mate with connectors specified in MIL-DTL-24308/3, MIL-DTL-24308/4, MIL-DTL-24308/6, and MIL-DTL-24308/24.
2/ For insert arrangements see MIL-DTL-24308, Appendix A.

NOTE: Qualification by similarity: Qualification of connectors of one shell size of one configuration with a specific printed wiring tail length and diameter shall qualify all connectors of the same shell size and configuration with all other printed wiring tail lengths and diameters.

Contact retention: Not applicable.

PIN: Consists of the letter M, the basic number of the specifications sheet, and a dash number compiled from the code.

PIN example: M24308/23 -50 F

Specification sheet number

Dash sheet number from table I

Finish: For class G and N:

A = Pure electrodeposited aluminum
F = Cadmium (Navy-SH prohibits the use of cadmium finished connectors for shipboard application)
K = Zinc nickel
P = Passivated stainless steel
T = Nickel Fluorocarbon Polymer
Z = zinc

For class M:
Class M connectors have a gold finish, no suffix is required.

For class D:
Class D connectors have a nickel finish, no suffix is required.

Amendment notations. The margins of this specification are marked with vertical lines to indicate modifications generated by this amendment. This was done as a convenience only and the Government assumes no liability whatsoever for any inaccuracies in these notations. Bidders and contractors are cautioned to evaluate the requirements of this document based on the entire content irrespective of the marginal notations.

Referenced documents. In addition to MIL-DTL-24308, this document references the following:

MIL-DTL-24308/3
MIL-DTL-24308/4
MIL-DTL-24308/6
MIL-DTL-24308/24
IPC-CC-830

CONCLUDING MATERIAL

Custodians:
Army - CR
Navy - EC
Air Force - 85
NASA - NA
DLA - CC

Preparing activity:
DLA - CC

(Project 5935-2015-051)

Review activities:
Army - AT, CR4, MI
Navy - AS, CG, MC, SH
Air Force - 99

NOTE: The activities listed above were interested in this document as of the date of this document. Since organizations and responsibilities can change, you should verify the currency of the information above using the ASSIST Online database at https://assist.dla.mil/.