INCH-POUND

MIL-DTL-24308G
w/AMENDMENT 4
21 June 2016
SUPERSEDING
w/AMENDMENT 3
29 January 2014

DETAIL SPECIFICATION

CONNECTORS, ELECTRIC, RECTANGULAR, NONENVIRONMENTAL, MINIATURE, POLARIZED SHELL, RACK AND PANEL, GENERAL SPECIFICATION FOR

This specification is approved for use by all Departments and Agencies of the Department of Defense.

1. SCOPE

1.1 Scope. This specification covers the requirements for nonenvironmental, polarized shell, miniature, rack and panel connectors having pin and socket, crimp (removable), solder (nonremovable), or insulation displacement (nonremovable) contacts with rigid or float mounting, designed for -55°C to +125°C operating temperature range.

1.2 Part or Identifying Number (PIN). The PIN is to consist of the letter "M", the basic number of the specification sheet, an assigned dash number and a suffix letter for the finish if applicable (see 3.1):

M	24308/1	-1	F
Military designation	Specification sheet number	Dash number	Finish (see note 1)

For class G:
- A = Pure electrodeposited aluminum.
- F = Cadmium (see note 2).
- K = Zinc nickel.
- T = Nickel Fluorocarbon Polymer.
- Z = Zinc (see note 3).

For class N:
- A = Pure electrodeposited aluminum.
- F = Cadmium (see note 2).
- K = Zinc nickel
- T = Nickel Fluorocarbon Polymer.
- P = Passivated stainless steel.
- Z = Zinc (see note 3).

For class H:
Class H connectors have a tin finish, no suffix required

For class M:
Class M connectors have a gold finish, no suffix is required.

For classes D and K:
Class D and class K connectors have a nickel. finish, no suffix is required.

NOTES:
1. Prior to 1 July 1987, a suffix for finish was not included in the PIN.
2. A “F” suffix PIN is to be used for connectors with a cadmium finish and made after 1 July 1987.
3. The blank suffix is superseded by the “Z” suffix for zinc.

Comments, suggestions, or questions on this document should be addressed to DLA Land and Maritime, ATTN: VAI, P.O. Box 3990, Columbus, OH 43218-3990 or email RectangularConnector@dla.mil. Since contact information can change, you may want to verify the currency of this address information using the ASSIST Online database at https://assist.dla.mil.

AMSC N/A

FSC 5935

1.3 Classification.

1.3.1 Classes. Connectors covered by this specification are of the following classes.

G - General purpose connectors, see 3.3.6.1 (see note).
N - Nonmagnetic connectors, see 3.3.6.1 (see note).
H - Hermetic connectors.
M - Same as N except, these connectors are intended for space missions.
D - Same as G except, these connectors are intended for space missions.
K - Same as H except, these connectors are intended for space missions.

1.3.2 Style of termination. Connectors covered by this specification are of the following terminal styles:

Crimp
Solder
Insulation displacement contact (IDC)
Printed wiring board (PWB)

1.3.3 Types. Connectors covered by this specification are of the following types:

I - Standard density (size 20 contacts).
II - High density (size 22D contacts).
III - Standard density (size 20 IDC contacts)

2. APPLICABLE DOCUMENTS

2.1 General. The documents listed in this section are specified in sections 3 or 4 of this specification. This section does not include documents cited in other sections of this specification or recommended for additional information or as examples. While every effort has been made to ensure the completeness of this list, document users are cautioned that they must meet all specified requirements documents cited in sections 3 or 4 of this specification, whether or not they are listed.

2.2 Government documents.

2.2.1 Specifications, standards, and handbooks. The following specifications, standards, and handbooks form a part of this document to the extent specified herein. Unless otherwise specified, the issues of these documents are those cited in the solicitation or contract.

DEPARTMENT OF DEFENSE SPECIFICATIONS

MIL-C-22520/2 - Crimping tools, Terminal, Hand, Wire Termination for Wire Barrel Sizes 20 Through 28
MIL-DTL-24308/23 - Connectors, Electric, Rectangular, Nonenvironmental, Miniature, Polarized Shell, Rack and Panel, Socket Contacts, Printed Wiring Board Termination Types
MIL-DTL-24308/24 - Connectors, Electric, Rectangular, Nonenvironmental, Miniature, Polarized Shell, Rack and Panel, Pin Contacts, Printed Wiring Board Termination Types
MIL-DTL-83488 - Coating, Aluminum, High Purity
MIL-M-24519 - Molding Plastics, Electrical Thermoplastic
MIL-DTL-45204 - Gold Plating, Electrodeposited

DEPARTMENT OF DEFENSE STANDARDS

MIL-STD-202 - Test Methods for Electronic and Electrical Component Parts
MIL-STD-202-208 - Test Method Standard Method 208, Solderability
MIL-STD-202-210 - Test Method Standard Method 210, Resistance To Soldering Heat
MIL-STD-790 - Standard Practice for Established Reliability and High Reliability Qualified Products List (QPL) Systems for Electrical, Electronic, and Fiber Optic Parts Specifications
MIL-STD-1285 - Marking of Electrical and Electronic Parts

(Copies of these documents are available online at http://quicksearch.dla.mil)

2.2.2 Other Government documents drawings and publications. The following other Government documents, drawings, and publications form a part of this document to the extent specified herein. Unless otherwise specified, the issues are those cited in the solicitation or contract.

NATIONAL AERONAUTICS AND SPACE ADMINISTRATION (NASA)

JSC SP-R-0022 - Vacuum Stability Requirements of Polymeric Material for Spacecraft Applications.

(Copies of these documents are available online at www.nasa.gov/centers/johnson/home)

2.3 Non-Government publications. The following documents form a part of this document to the extent specified herein. Unless otherwise specified, the issues of these documents are those cited in the solicitation or contract (see 6.2).

ASTM INTERNATIONAL

ASTM A342/A342M	- Materials, Feebly Magnetic, Permeability of, Test Method for
ASTM B545	- Electrodeposited Coatings of Tin, Standard Specification For
ASTM B633	- Zinc on Iron and Steel, Electrodeposited Coatings of
ASTM B733	- Metal , Autocatalytic Electroless Nickel-Phosphorus Coatings on
ASTM B841	- Electrodeposited Coatings of Zinc Nickel Alloy Deposits, Standard Specification for
ASTM E595	- Total Mass Loss and Collected Volatile Condensable Material from Outgassing in a Vacuum Environment, Standard Test Method for
ASTM D4067	- Reinforced and Filled Poly(Phenylene Sulfide) (PPS) Injection Molding and Extrusion Materials Using ASTM Methods, Standard Classification System for
ASTM D5927	- Thermoplastic Polyester (TPES) Injection and Extrusion Materials Based on ISO Test Methods
ASTM D5948	- Molding Compounds, Thermosetting, Standard Specification For

(Copies of these documents are available online at http://www.astm.org)

ELECTRONIC INDUSTRIES ASSOCIATION

EIA-364	- Electrical Connector/Socket Test Procedures Including Environmental Classifications
EIA-364-02	- Air Leakage Test Procedure for Electrical Connectors
EIA-364-05	- Contact Insertion, Release and Removal Force Test Procedure for Electrical Connectors
EIA-364-06	- Contact Resistance Test Procedure for Electrical Connectors
EIA-364-09	- Connectors and Contacts, Electrical, Durability Test Procedure for
EIA-364-10	- Fluid Immersion Test Procedure for Electrical Connectors
EIA/ECA-364-13	- Mating and Unmating Forces Test Procedure for Electrical Connectors and Sockets
EIA-364-20	- Connectors, Sockets and Coaxial Contacts, Electrical , Withstanding Voltage Test Procedure for
EIA/ECA-364-21	- Insulation Resistance Test Procedure for Electrical Connectors, Sockets, and Coaxial Contacts
EIA-364-24	- Maintenance Aging Test Procedure for Electrical Connectors
EIA-364-25	- Probe Damage Test Procedure for Electrical Connectors
EIA/ECA-364-26	- Salt Spray Test Procedure for Electrical Connectors, Contacts and Sockets
EIA-364-27	- Connectors , Electrical , Mechanical Shock (Specified Pulse) Test Procedure for
EIA-364-28	- Connectors and Sockets, Electrical, Vibration Test Procedure for
EIA/ECA-364-29	- Contact Retention Test Procedure for Electrical Connectors
EIA-364-31	- Connectors and Sockets, Electrical, Humidity Test Procedure for
EIA-364-32	- Connectors and Sockets , Electrical , Thermal Shock (Temperature Cycling) Test Procedure for
EIA-364-35	- Insert Retention Test Procedure for Electrical Connectors
EIA-364-37	- Contact Engagement and Separation Force Test Procedure for Electrical Connectors

(Copies of these documents are available online at http://www.ecianow.org)

IPC - ASSOCIATION CONNECTING ELECTRONICS INDUSTRIES

J-STD-006 - Electronic Grade Solder Alloys, Fluxed and Non Fluxed Solid Solders for Electronic Soldering Applications Requirements for

(Copies of these documents are available online at http://www.ipc.org)

INTERNATIONAL ORGANIZATION FOR STANDARDS (ISO)

ISO 10012 - Measurement Management Systems – Requirements for Measurement Processes and Measuring Equipment

(Copies of these documents are available online at http://www.ansi.org)

NCSL INTERNATIONAL

NCSL Z540.3 - Calibration of Measuring and Test Equipment, Requirements for

(Copies of these documents are available online at http://www.ncsli.org)

NATIONAL ELECTRICAL MANUFACTURERS ASSOCIATION (NEMA)

NEMA HP 3 - Electrical and Electronic PTFE (Polytetrafluoroethylene) Insulated High Temperature Hook Up Wire; Types ET (250 Volts), E (600 Volts), and EE (1000 Volts)

(Copies of these documents are available online at http://www.nema.org)

SOCIETY OF AUTOMOTIVE ENGINEERS, INC.

SAE AMS2404 - Plating, Electroless Nickel
SAE AMS2700 - Passivation of Corrosion Resistant Steel
SAE AMS-QQ-N-290 - Nickel Plating (Electrodeposited)
SAE AMS-QQ-P-416 - Plating, Cadmium (Electrodeposited)
SAE AMS-P-81728 - Plating, Tin-Lead (Electrodeposited)
EIA-557 - Statistical Process Control Systems

(Copies of these documents are available online at http://www.sae.org)

2.4 Order of precedence. Unless otherwise noted herein or in the contract, in the event of a conflict between the text of this document and the references cited herein (except for related specification sheets), the text of this document takes precedence. Nothing in this document, however, supersedes applicable laws and regulations unless a specific exemption has been obtained.

3. REQUIREMENTS

3.1 Specification sheets. The individual item requirements shall be as specified herein and in accordance with the applicable specification sheet. In the event of any conflict between the requirements of this specification and the specification sheet, the latter shall govern.

3.2 Qualification. Connector assemblies furnished under this specification shall be products that are authorized by the qualifying activity for listing on the applicable qualified products list before contract award (see 4.3 and 6.3).

3.2.1 Quality.

3.2.1.1 Statistical process control (SPC). The contractor shall implement and use statistical process control techniques in the manufacturing process for parts covered by this specification. The SPC program shall be developed and maintained in accordance with EIA-557. Where SPC cannot be utilized because of non-continuous production requirements, a lot sampling plan for inspection in accordance with table XIII with c = 0 can be utilized. The SPC and c = 0 programs shall be documented and maintained as part of the overall reliability assurance program in accordance with EIA-557 and MIL-STD-790. Evidence of such compliance shall be verified by the qualifying activity of this specification as a prerequisite for qualification.

3.3 Materials. Materials shall be as identified herein. However, when a definite material is not specified, a material shall be used which will enable the connectors to meet all requirements of this specification. Acceptance or approval of any constituent material shall not be construed as a guarantee for acceptance of the finished product.

3.3.1 Interface materials, platings and processes. Interface materials, platings, and processes have been established to provide assurances that connectors manufactured to this specification will properly interface to similar industry standard or government specified connector systems without problems of electrochemical incompatibility or excessive interface surface wear. The manufacturers of connectors supplied to this specification may be allowed to use alternate recognized industry standard materials, platings, and processes from those identified in 3.3. Alternate materials, platings and processes used must be coordinated with the qualifying activity as part of the qualification process. Use of alternates to those referenced guidance items by the supplier must not result in inferior short or long term performance or reliability of supplied connectors as compared with connectors manufactured using the referenced materials, platings, or processes. Short or long term failures or reliability problems due to use of these alternates shall be the responsibility of the supplier.

3.3.2 Dissimilar metals. When dissimilar metals are employed in intimate contact with each other, protection against electrolytic corrosion shall be provided (see 3.3.1).

3.3.3 Nonmagnetic materials (classes M and N connectors). All parts used in classes M and N connectors shall be made from materials which are classed as nonmagnetic (see 3.5.1).

3.3.4 Contact materials. Classes D, G, M, and N contact bodies shall be made of suitably conductive copper based alloys. Classes H and K contacts may be ferrous alloy material. All contacts shall be suitably protected from corrosion. When contacts are in-process plated in strip form, the absence of plating in the separation area is acceptable, provided the area is nonfunctional and any corrosion products formed as a result of salt spray testing (4.5.19) do not appear in the contact mating or termination areas.

3.3.4.1 Accessory members. Contact accessory members such as hoods, pressure members and retaining devices shall be made of corrosion resistant material or shall be suitably treated to resist corrosion.

3.3.4.2 Contact finish (solder contact). The finish on contact bodies shall be gold applied either overall or localized for class G, (see 6.5). The finish on contact bodies for classes D and M shall be gold plated applied overall. The finish on contact bodies for classes H and K shall be gold plated.

3.3.4.2.1 Overall finish. Contact bodies shall be overall gold plated in accordance with MIL-DTL-45204, or equivalent as approved by the qualifying and preparing activities, type II, grade C, class 1, over a suitable underplate (see 6.5). Silver shall not be used as an underplate. Nickel shall not be used as an underplate on classes M and N. The finish on contact bodies of class H and K connectors shall be gold plated in accordance with MIL-DTL-45204, or equivalent as approved by the qualifying and preparing activities, type II, grade C, class 1. Preliminary plating of another metal is permissible.

3.3.4.2.2 Localized finish. Contact bodies shall be overall nickel plated in accordance with SAE AMS-QQ-N-290, except plating thickness shall be 30 to 150 microinches thick (see 6.5). Mechanical operations may be performed after application of plating.

3.3.4.2.2.1 Contact mating area. The contact mating area as shown on figure 1 shall be gold plated in accordance with MIL-DTL-45204, or equivalent as approved by the qualifying and preparing activities, type II, grade C, class 1, over nickel plating (see 3.3.4.2.2).

3.3.4.3 Terminations. Terminations shall be plated as follows:

a. Solder cups: 100 microinches minimum tin-lead plated in accordance with SAE AMS-P-81728, 50 to 95 percent tin.

b. Insulation displacement: 100 microinches minimum tin-lead plated in accordance with SAE AMS-P-81728, 50 to 95 percent tin.

c. Printed wiring tails: Dimension M in accordance with MIL-DTL-24308/23 and MIL-DTL-24308/24, 100 microinches minimum tin-lead plated in accordance with SAE AMS-P-81728.

d. Solder dipping is permitted for solder cups and printed wiring tails, providing it meets procedures and requirements of MIL-STD-202-208.

3.3.5 Dielectric materials.

3.3.5.1 Insert. Insert material type SDG-F or GDI-30F in accordance with ASTM D5948, or TPES013G30, TPES023G30 or TPES102G30 in accordance with ASTM D5927, or type GPT-30F, GET-30F, GCT-30F or GLCP-30F, GST-40F or GLCP-50F in accordance with or MIL-M-24519 or PPS000G40A63463EA220ED037EE030EF125EG100EH150FL310Y11 in accordance with ASTM D4067, for classes D, G, M, and N connectors. Insert dielectric materials for classes H and K shall be glass.

3.3.6 Metal components. Metal components shall be of high grade corrosion resistant material or a material treated to resist corrosion, which will allow the complete connector assembly to meet the requirements of this specification.

3.3.6.1 Finish. (Class G and N), Shells shall be cadmium plated in accordance with type II, class 2 of SAE AMS-QQ-P-416 or zinc plated in accordance with type II of ASTM B633. A preliminary plating of another metal is permissible. The resulting finish shall be electrically conductive, and shall be of a golden color to ensure that the chromate finish has been properly applied or pure electrodeposited aluminum non-reflective in accordance with MIL-DTL-83488 Corrosion-resistant steel parts including shells shall be passivated in accordance with SAE AMS2700, types 2, 6, 7 or 8 and need not be overplated. (Class G only**)**, zinc nickel alloy in accordance with ASTM B841, non-reflective black an underplate is optional or Nickel Fluorocarbon Polymer non-reflective an underplate is optional.

3.3.6.2 Finish for class H connectors. Unless otherwise specified, all metal parts for class H connectors shall be tin plated in accordance with ASTM B545. Preliminary plating of another metal is permissible. Tin shall contain a minimum of 3% lead to prevent tin whiskers.

3.3.6.3 Finish for classes D, K, and M connectors. All metal parts for classes D and K connectors shall be Electroless Nickel in accordance with SAE AMS2404, class 3 or 4, .0005 inch minimum thickness or electrically conductive nickel-phosphorus conforming to ASTM B733, class 1 or 2, type III, .0005 inch minimum thickness. The finish shall be dull. Use of a suitable underplate is permissible. For class M, the finish shall be gold in accordance with MIL-DTL-45204 or equivalent as approved by the qualifying and preparing activities, grade C, class 1 over a suitable underplate (see 6.5). A silver underplate shall not be used.

3.3.7 Recycled, recovered, or environmentally preferable, or biobased materials. Recycled, recovered, or environmentally preferable, or biobased materials should be used to the maximum extent possible, provided that the material meets or exceeds the operational and maintenance requirements, and promotes economically advantageous life cycle costs.

3.3.8 Pure tin. The use of pure tin is prohibited. Tin content used in connector materials shall not exceed 97 percent, and an alloy material shall be chosen to inhibit the growth of tin whiskers (see 6.7).

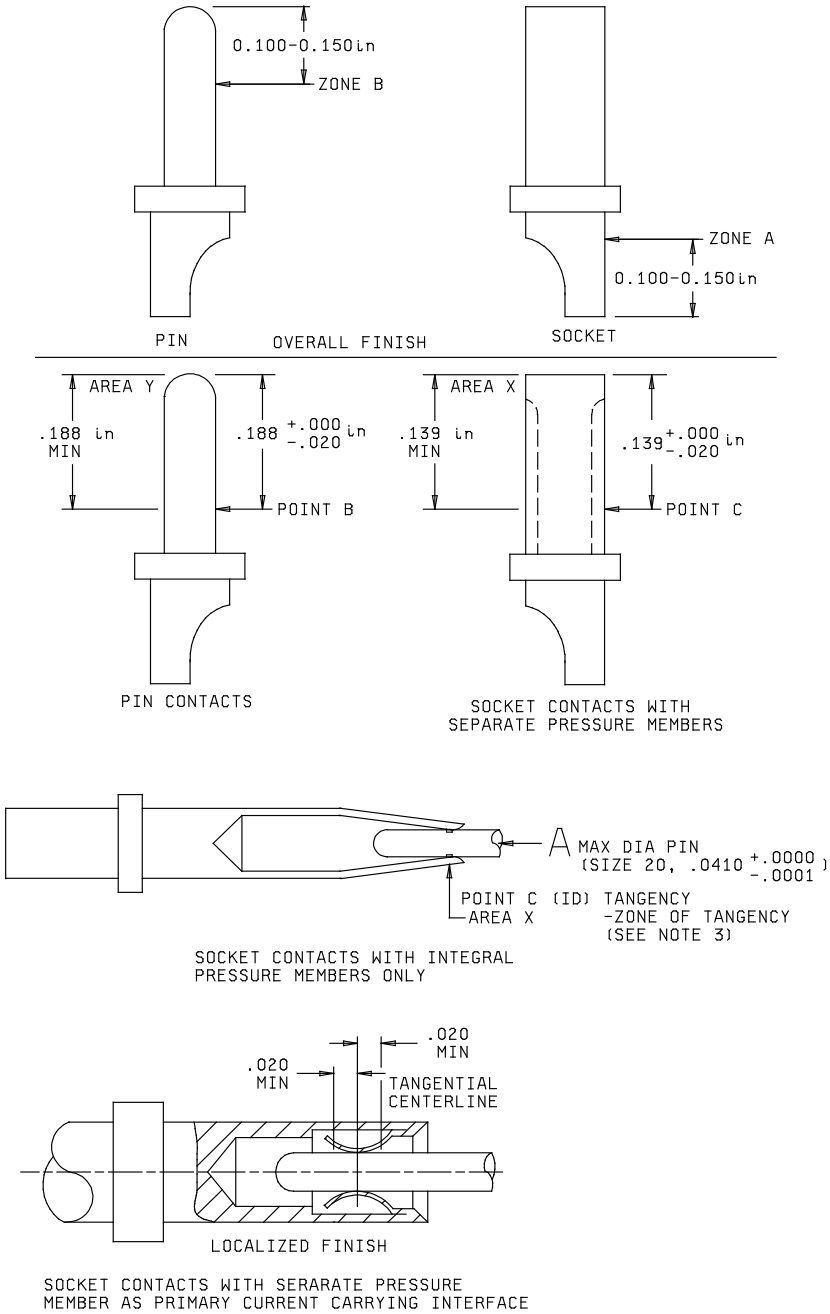

Inches	mm
.0001	0.0025
.020	0.51
.0410	1.041
.100	2.54
.139	3.53
.150	3.81
.188	4.78

FIGURE 1. Gold thickness areas.

NOTES:
1. Overall finish: Measure gold thickness in zone A or B, as applicable.
2. Localized finish: Apply gold to the inside and outside diameter of the contact in area X or Y. Measure gold thickness on outside diameter of the contact at point B or C, as applicable.
3. On socket contacts with integral pressure members, area X (zone of tangency) extends from the tip of the contact to .020 inch beyond the point of tangency, (point C) on the inside and outside diameter of the contact.
4. Dimensions are in inches.
5. Metric equivalents are given for information only.

FIGURE 1. Gold thickness areas – Continued.

3.4 Interface and physical dimensions. Connectors shall be of the physical dimensions specified (see 3.1). Connectors shall be so designed that neither the pins nor the sockets will be damaged during normal mating of counterpart connectors.

3.4.1 Contact interface design. Contacts interface design shall be as specified on individual standards or military specification sheets (see 3.1).

3.4.1.1 Solder contacts. Solder contacts shall be nonremovable from the insert, shall have eyelet or solder cup terminals as specified (see 3.1) and shall be in accordance with MIL-DTL-24308, Appendix B. Solder cups shall be designed such that during soldering no components will be damaged and no liquid solder shall escape.

3.4.1.2 Crimp contacts. Crimp contacts shall be as follows:

Connector density	Contact size	Contact Part or Identifying Number (PIN)
High	22D socket	M39029/57-354
High	22D pin	M39029/58-360
Standard	20 pin	M39029/64-369
Standard	20 socket	M39029/63-368

3.4.1.2.1 Contact insertion and removal tools. Crimp removable connectors shall be designed for contact insertion and removal with the applicable military tools as follow:

Contact size	Tool PIN
22D	M81969/14-01 with plastic tips M81969/1-04 with metal tips
20	M81969/39-01 with plastic tips M81969/1-02 with metal tips

3.4.1.3 Classes H and K contacts. Classes H and K contacts are to be permanently fused in place and shall have eyelet or solder cup terminals, as specified (see 3.1), and shall be in accordance with Appendix B.

3.4.1.4 Insulation displacement contacts. Insulation displacement contacts shall be nonremovable from the insert and shall be as specified (see 3.1).

3.4.2 Insert design and construction. Inserts shall be designed with suitable sections and radii such that they will not readily chip, crack, or break in assembly or in normal service. Inserts shall be molded or bonded with a bond barrier between all adjacent contacts and outside edge and of one-piece construction, except for IDC. Pin entry openings on socket insert faces shall be as small as practicable. Socket inserts shall provide adequate protection against a pin contacting a socket before the mating pair of connectors has been polarized. The inserts shall be so designed that the inserts cannot be removed from the shells. The contact retaining system shall be free of foreign material, adhesive, or any obstruction that would prevent smooth contact insertion and positive retention. The contact retention system for removable crimp contact connectors shall be a metal retention clip or other contact retention method, which will enable the contacts to meet the contact retention requirements specified in 3.5.5. All contact retention systems shall utilize a common contact insertion/removal tool, (see 3.3.1).

3.4.2.1 Insert arrangement. The insert arrangement shall be as specified by the connector PIN (see 3.1).

3.4.2.2 Contact alignment and stability. With all contacts in place, the alignment of pin and socket contacts shall always permit engagement irrespective of buildup of allowable tolerances on hole locations, distortion of contacts due to crimping, and insert location in the shell.

3.4.3 Shell design. The shell shall be designed to positively retain the insert and shall be constructed so that the insert cannot be removed.

3.4.3.1 Shell polarization. Polarization shall be accomplished by a keystone shape shell design with polarization accomplished before engagement of the pins and sockets.

3.4.3.2 Mounting. Connectors shall be provided with means to fasten the shell securely to a mounting surface. Classes H and K connectors shall be provided with solder mounting provisions, or with provisions for external mounting hardware (see 3.1).

3.4.4 Interchangeability. All connectors and accessories having the same military PIN shall be completely interchangeable with each other with respect to installation (physical) and performance (function) as specified herein. Solder and crimp contact connectors shall be intermatable (see 3.1).

3.4.5 Mated spacing. Connectors shall meet applicable performance requirements when mated within the spacing shown on figure 2.

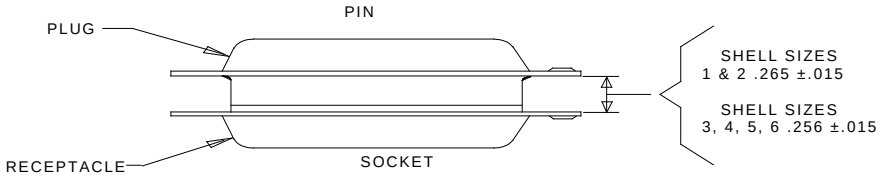

FIGURE 2. Mated spacing.

3.5 Performance. Connectors shall be designed to meet the requirements specified herein.

3.5.1 Magnetic permeability (classes M and N). The relative permeability of classes M and N connectors shall not exceed 2 µ when measured as specified in 4.5.3.

3.5.2 Maintenance aging (crimp type). All crimp-contact connectors shall be capable of conforming to the requirements of 3.5.3 and 3.5.4 after maintenance aging of 4.5.4.

3.5.3 Contact insertion and removal forces. The axial forces required to insert and remove removable contacts shall conform to the applicable requirements in table I when tested as specified in 4.5.5.

TABLE I. Contact insertion and removal forces (pounds maximum).

	Contact size	
	20	22D
Insertion	4	4
Removal	4	4

3.5.4 Mating and unmating force. The force for mating and unmating of counterpart connectors shall meet the requirements in table II. The connectors used in this test shall have the complete complement of contacts. Testing shall be as specified in 4.5.6.

TABLE II. Mating and unmating forces (pounds).

Shell size	Unmating				Mating	
	Minimum Class		Maximum Class		Maximum Class	
	G, D, M, N	H, K	G, D, M, N	H, K	G, D, M, N	H, K
1	0.75	1.50	6.0	7.00	10.0	7.25
2	1.00	2.00	10.0	13.00	17.0	13.00
3	1.75	3.25	17.0	21.25	28.0	21.25
4	2.50	4.50	24.0	31.25	39.0	31.25
5	3.25	5.50	30.0	42.25	49.0	42.25
6	4.50	----	39.0	-----	65.0	-----

3.5.5 Contact retention. Contacts for classes G, D, M, and N connectors shall be retained in their inserts by a 9-pound (minimum) force. The axial displacement of contacts shall not exceed .012 inch (0.30 mm) while under load (see 4.5.7).

3.5.6 Dielectric withstanding voltage. Unmated connectors shall show no evidence of breakdown or flashover when subjected to the test voltages and altitudes specified in tables III and IV. Corona shall not be considered as breakdown. Testing shall be as specified in 4.5.8.

TABLE III. Type I and II test voltage (Volts rms, 60 Hz). 1/

Altitude	Humidity conditioned (see 4.5.15)		All other Conditions	
	Classes G, D, M, N	Classes H, K	Classes G, D, M, N	Classes H, K
Sea level	600	400	1,000	750
70,000 feet	---	---	325	175

1/ These are not working voltages.

TABLE IV. Type III test voltage (Volts rms, 60 Hz). 1/

Altitude	Humidity conditioned (see 4.5.15)	All other conditions
	Class G	
Sea level	500	500
70,000 feet	---	200

1/ These are not working voltages.

3.5.7 Cable retention (flat cable only). When connectors are tested as specified in 4.5.9, they shall withstand the minimum applied force without mechanical damage.

3.5.8 Insulation resistance at ambient temperature. The insulation resistance of unmated connectors shall conform to the applicable requirements in table V when tested as specified in 4.5.10.

TABLE V. Insulation resistance (megohms minimum).

Humidity conditioned (see 4.5.15)		All other conditions
After step 6 of test procedure EIA-364-31	After 24 hours of conditioning test procedure EIA-364-31	
Megohms (min)	Megohms (min)	Megohms (min)
1	1,000	5,000

3.5.9 Contact resistance. Contact resistance for mated pairs of pin and socket contacts shall be as specified in table VI when tested as specified in 4.5.11.

TABLE VI. Contact resistance (millivolts maximum).

Contacts						
Contact size or type	AWG wire size	Test current (amperes)	Classes			
			G, D, M, N		H, K	
			After salt spray	All others conditions	After salt spray	All others conditions
20	24	3.0	55	45	---	---
	20	7.5	65	55	---	---
	24	2.0	---	---	ind 165	ind 165
	20	5.0	---	---	avg 90	avg 70
IDC	28	1.0	75	65	---	---
PWB	24	3.0	55	45	---	---

3.5.10 Contact engagement and separation forces. Socket contacts shall conform to the forces specified in table VII when tested as specified in 4.5.12.

TABLE VII. Contact engagement and separation forces (ounces).

Solder contact size	Maximum individual engagement force using maximum diameter test pin	Maximum average engagement force using maximum diameter test pin	Minimum separation force using minimum diameter test pin
Initial			
22D	12.0	9.5	0.7
20	18.0	12.0	0.7
IDC	18.0	12.0	0.7
After conditioning			
22D	14	11.4	0.6
20	22	14	0.6
IDC	22	14	0.6

3.5.11 Temperature cycling (classes G, H, and N). There shall be no damage detrimental to operation of the connector after being subjected to the temperature extremes in table VIII as specified in 4.5.13.

TABLE VIII. Temperature extremes.

Extremes	°C
Low	-55 +0 -3
High	+125 +3 -0

3.5.11.1 Temperature cycling (classes D, K, and M). There shall be no damage detrimental to connector operation after being subjected to testing specified in 4.5.13.1. Following the test, the connectors shall withstand the sea level dielectric withstanding voltage specified in table III.

3.5.12 Air leakage (classes H and K connectors). When tested as specified in 4.5.14, the air leakage rate of classes H and K connectors shall be no greater than one micron cubic foot per hour at a differential of one atmosphere (1.04×10^{-5} atmospheres cm^3/s). The specified leakage rate shall apply only through the connector and not through the flange to the mounting surface joint.

3.5.13 Humidity. Connectors shall meet the applicable dielectric withstanding voltage and insulation resistance requirements (see 3.5.6 and 3.5.8) when tested as specified in 4.5.15.

3.5.14 Vibration. Mated connectors shall not be damaged and there shall be no loosening of parts due to vibration. Counterpart connectors shall be retained in engagement and there shall be no interruption of electrical continuity or current flow longer than 1 microsecond when tested as specified in 4.5.16.

3.5.15 Shock. Mated connectors shall not be damaged and there shall be no loosening of parts, nor shall there be an interruption of electrical continuity or current flow longer than 1 microsecond during the exposure to mechanical shock, as specified in 4.5.17.

3.5.16 Durability. Counterpart connectors shall show no mechanical or electrical defects detrimental to the operation of the connector, as specified in 3.5.4 and 3.5.10, after 500 cycles of mating and unmating as specified in 4.5.18.

3.5.17 Salt spray (corrosion). Mated connectors shall show no exposure of base metal due to corrosion which will affect performance as specified in 3.5.4, 3.5.5, 3.5.8, and 3.5.9 when tested as specified in 4.5.19.

3.5.18 Oversize pin exclusion. Socket contacts shall exclude the entry of the test pin specified in table IX when tested as specified in 4.5.20. After testing, the contacts shall meet the contact resistance requirements specified in 3.5.9.

TABLE IX. Oversize pin exclusion.

Contact size	Pin diameter
20	.046

3.5.19 Resistance to test probe damage. Socket contacts shall meet the engaging and separating force requirements specified in 3.5.10 and shall show no evidence of visible damage when tested as specified in 4.5.21.

3.5.20 Fluid immersion. Connectors shall mate within the forces specified in 3.5.4 after being subjected to the fluid immersion test as specified in 4.5.22.

3.5.21 Insert retention.

3.5.21.1 Insert retention (classes D, G, M, and N). Inserts shall not be dislocated from their original positions with an axial load of 60 lb/in^2 applied as specified in 4.5.23.

3.5.21.2 Insert retention (classes H and K). Classes H and K inserts shall not be dislocated from their original positions or damaged when an effective pressure differential of 200 lb/in^2 is applied as specified in 4.5.23.

3.5.22 Contact pin strength. After being subjected to mechanical loading specified in 4.5.25 pin contacts shall exhibit a permanent set no greater than .005 inch.

3.5.23 Solderability. Solderable, nonremovable contact terminations shall withstand the test specified in 4.5.24. Printed wiring tails shall meet the solderability requirements in accordance with MIL-STD-202-208.

3.5.24 Thermal vacuum outgassing (classes D, K, and M). The entire connector assembly, when tested as specified in 4.5.26, shall have maximum total mass loss (TML) of 1.0 percent of the original specimen mass and shall have a maximum volatile condensable material (VCM) content of 0.1 percent of the original specimen mass.

3.5.25 Resistance to soldering heat. Solderable, nonremovable contact connectors shall withstand the tests specified in 4.5.27.

3.6 Marking. Connectors shall be marked in accordance with method I of MIL-STD-1285 or an equivalent industry standard, and shall include the military PIN (see 3.1), the manufacturer's name or code symbol, and date code.

3.6.1 Insert marking. Raised or depressed characters may be used. Markings are shown on the applicable military specification sheet or standard. Socket face and pin faces are the opposite. Contact position markings shall appear on both sides of the insert. On insulation displacement connectors, the first and last pin number of each row shall be marked clearly on the housing.

3.6.1.1 Contact designations. All contact locations shall be designated by identifiable characters on the front and rear faces of the insert or insert assembly. Positioning and arrangement of the characters shall be such that the corresponding contact location may be readily identifiable. Connector shell marking and insert marking shall remain legible after completion of the tests specified in 4.5.

3.6.2 Connector kit package. Each connector kit package shall contain a removable contact connector (marked with the complete connector PIN), a full complement of contacts for the connector, and an applicable insertion/removal tool as required by the detail specification sheet (see 3.1).

3.7 Workmanship. Connectors shall be processed in such a manner as to be uniform in quality and shall be free from burrs, crazing, cracks, voids, pimples, chips, blisters, pin holes, sharp cutting edges, and other defects that will adversely affect life, serviceability, or appearance. Sharp cutting edges are acceptable on the terminations of IDC connectors.

4. VERIFICATION

4.1 Classification of inspections. The inspections specified herein are classified as follows:

a. Qualification inspection (see 4.3).

b. Conformance inspection(see 4.4).

4.2 Inspection conditions. Unless otherwise specified herein, all inspections shall be performed in accordance with the test conditions specified in the "GENERAL REQUIREMENTS" of MIL-STD-202 and EIA-364.

4.2.1 Test equipment and inspection facilities. Test and measuring equipment and inspection facilities of sufficient accuracy, quality and quantity to permit performance of the required inspection shall be established and maintained by the contractor. The establishment and maintenance of a calibration program to control the accuracy of the measuring and test equipment (i.e. NCSL Z540.3, ISO 10012 or comparable standards) shall be required.

4.2.2 Assembly plants. Assembly plants must be listed on or approved for listing on the applicable Qualified Products List (QPL). The qualified connector manufacturer shall certify that the assembly plant is approved for the distribution of the manufacturer's parts. The assembly plant shall use only piece parts supplied by the qualified connector manufacturer. No testing other than visual inspection is required of certified piece parts obtained from the qualified connector manufacturer, except when there is cause for rejection. All assemblies produced at the assembly plant shall be subjected to inspection of product to assure that the assembly process conforms with established at the qualified manufacturing plant. Quality control requirements, including Government inspection surveillance, shall be the same as required for the qualified connector manufacturer.

4.2.3 Established reliability and high reliability practice. An established reliability and high reliability practice shall be maintained in accordance with MIL-STD-790. Evidence of such compliance shall be verified by the qualifying activity of this specification as a prerequisite for initial and continued qualification.

4.3 Qualification inspection. Qualification inspection shall be performed at a laboratory acceptable to the Government (see 6.3) on sample units produced with equipment and procedures normally used in production. Use of alternate materials, platings, and processes shall be identified in the product test documentation (see 3.3.1).

4.3.1 Sample size.

4.3.1.1 Connectors. A minimum of 6 completely assembled plugs and receptacles of each class (1.3.1) of each type (1.3.3), and of each style (1.3.2), with the largest insert arrangement for which qualification is desired shall be subjected to the examinations and tests, except for thermal vacuum outgassing, in the sequence shown in table XI. For classes D, K, and M, all the nonmetallic materials, including lubricants, of two additional connectors shall be subjected to the thermal vacuum outgassing test. If classes G and N or M and D are being qualified at the same time, a minimum of three completely assembled plugs and receptacles with the insert arrangement of the largest size connector of the type (1.3.3) with the same style of termination (1.3.2), and each class (classes G and N, 3 class G, 3 class N; classes D and M, 3 class M, 3 class D) shall be subjected to the examinations and tests, except for thermal vacuum outgassing, in the sequence shown in table XI. For classes D and M, all the nonmetallic materials, including lubricants, of one additional connector of each class shall be subjected to the thermal vacuum outgassing test. The connectors shall have a full complement of contacts. Half of the class H and class K contacts shall have solder cups and the remainder shall have eyelets. The samples subjected to qualification testing shall be provided with counterpart connectors for those tests requiring mating assemblies. The counterpart connectors provided for this purpose shall be new, previously qualified connectors or new connectors submitted for qualification testing. Suppliers not producing mating connectors shall submit substantiating, certification data that tests were performed with qualified counterpart connectors. The samples shall be taken from a production run and shall be produced with equipment and procedures normally used in production.

4.3.1.1.1 Printed wiring board connectors. When qualifying plugs and receptacles of printed wiring board termination types, both the plug and receptacle shall be mounted to printed wiring boards and test as mated connectors.

4.3.1.2 Qualification of additional connectors. For all other connector sizes of the same type, class, and style of termination for which qualification is desired, two each of the completely assembled plugs and receptacles shall be subjected to the examinations and tests in the sequence shown in table XI. Mating plugs and receptacles shall be furnished.

4.3.1.3 Preparation of samples. Connectors shall be wired with approximately 2 feet of wire in accordance with NEMA HP 3, type E and table X. Half of the connectors of each type shall be wired with the maximum wire size and the remainder shall be wired with the minimum wire size specified in table X. Termination of wires to contacts shall be accomplished as follows: A MIL-C-22520/2 crimping tool (see 3.1), shall be used for removable contacts. Soldering shall be used for nonremovable contacts. Insulation displacement connectors shall use flexible, flat, unshielded, round conductor cable (see 3.3.1).

TABLE X. Test wire sizes.

Contact size	Maximum wire size	Minimum wire size
20 22D	20 22	24 28
IDC	28 stranded	28 stranded

4.3.2 Inspection routine. The sample shall be subjected to the inspections specified in table XI, in the order shown. All sample units shall be subjected to visual and mechanical inspection before wiring (see 4.3.1.2 and 4.4.1).

4.3.3 Failures. One or more failures shall be cause for refusal to grant qualification approval.

4.3.4 Verification of qualification. To retain qualification, the contractor shall verify in coordination with the qualifying activity the capability of manufacturing products which meet the requirements of this specification. Refer to the qualifying activity for the guidelines necessary to retain qualification to this specification. The contractor shall immediately notify the qualifying activity when inspection data indicates failure of the qualified product to meet the requirements of this specification.

TABLE XI. Qualification inspection.

Inspection	Requirement paragraph	Test method paragraph	Connector class 1/				
			1	2	3	4	5
Group I							
Visual and mechanical inspection	3.1, 3.3, 3.4, 3.6, and 3.7	4.5.2	X	X	X	X	X
Magnetic permeability (classes N and M) 2/	3.5.1	4.5.3			X	X	
Maintenance aging (crimp type)	3.5.2	4.5.4	X		X		
Contact insertion and removal forces	3.5.3	4.5.5	X		X		
Mating and unmating force	3.5.4	4.5.6	X		X		
Contact retention 3/	3.5.5	4.5.7	X	X	X	X	
Dielectric withstanding voltage: 2/							
At sea level	3.5.6	4.5.8.1	X	X	X	X	X
At altitude	3.5.6	4.5.8.2	X	X	X	X	X
Cable retention (flat cable only) 4/	3.5.7	4.5.9		X			
Insulation resistance at ambient temperature 2/	3.5.8	4.5.10	X	X	X	X	X
Contact resistance	3.5.9	4.5.11		X		X	X
Contact engagement and separation forces	3.5.10	4.5.12		X		X	X
Mating and unmating force	3.5.4	4.5.6	X	X	X	X	X
Temperature cycling (classes G, H, and N)	3.5.11	4.5.13	X	X	X	X	X
Temperature cycling (classes D, K, and M)	3.5.11.1	4.5.13.1	X	X	X	X	X
Air leakage (classes H and K)	3.5.12	4.5.14					X
Humidity	3.5.13	4.5.15	X	X	X	X	X
Dielectric withstanding voltage	3.5.6	4.5.8	X	X	X	X	X
Insulation resistance	3.5.8	4.5.10	X	X	X	X	X
Vibration	3.5.14	4.5.16	X	X	X	X	X
Shock	3.5.15	4.5.17	X	X	X	X	X
Durability	3.5.16	4.5.18	X	X	X	X	X
Contact engagement and separation forces	3.5.10	4.5.12		X		X	X
Mating and unmating force	3.5.4	4.5.6	X	X	X	X	X
Salt spray (corrosion) 3/	3.5.17	4.5.19	X	X	X	X	X
Contact resistance	3.5.9	4.5.11		X		X	X
Mating and unmating	3.5.4	4.5.6	X	X	X	X	X
Contact retention	3.5.5	4.5.7	X	X	X	X	
Oversize pin exclusion	3.5.18	4.5.20		X		X	
Contact resistance	3.5.9	4.5.11		X		X	
Resistance to test probe damage	3.5.19	4.5.21		X		X	
Contact engagement and separation forces	3.5.10	4.5.12		X		X	
Fluid immersion 2/	3.5.20	4.5.22	X	X	X	X	X
Mating and unmating force 2/	3.5.4	4.5.6	X	X	X	X	X
Insert retention	3.5.21	4.5.23	X	X	X	X	X
Visual and mechanical inspection	3.1, 3.3, 3.4, 3.6 and 3.7	4.5.2	X	X	X	X	X
Thermal vacuum outgassing (classes D, K, and M) 5/	3.5.24	4.5.26	X	X	X	X	X
Group II 6/, 7/							
Resistance to solder heat	3.5.25	4.5.27		X		X	X
Group III							
Solderability 6/	3.5.23	4.5.24		X		X	X
Contact pin strength	3.5.22	4.5.25		X		X	X

See footnotes on next page.

TABLE XI. Qualification inspection – Continued.

1/ Connector class:

1. Classes D and G -Removable contact connectors.
2. Classes D and G -Nonremovable contact connectors.
3. Classes M and N -Removable contact connectors.
4. Classes M and N -Nonremovable contact connectors.
5. Classes H and K -Nonremovable contact connectors.

2/ Not applicable for periodic inspection.
3/ Not applicable for non-removable contacts.
4/ DC Connectors shall meet the test requirements specified for classes G and D nonremovable contact connectors.
5/ See 4.5.1.1 (nonmetallic materials of two connector assemblies).
6/ Not applicable for crimp, wrappost, and IDC contacts.
7/ Not applicable for hermetic connectors.

4.4 Conformance inspection.

4.4.1 Inspection of product for delivery. Inspection of product for delivery shall consist of group A inspection.

4.4.1.1 Inspection lot. An inspection lot shall consist of all connectors or removable crimp contacts, as applicable, covered by one specification sheet, produced under essentially the same conditions, and offered for inspection at one time.

4.4.1.2 Group A inspection. Group A inspection shall consist of the inspections specified in Table XII, in the order shown.

4.4.1.2.1 Sampling plan (group A). Table XII tests shall be performed on a production lot basis. Samples shall be selected as specified in table XIII. If one or more defects are found, the lot shall be screened for that particular defect and the defective parts removed. A new sample of parts shall be selected as specified in table XIII and all group A tests again performed. If one or more defects are found in the second sample, the lot shall be rejected and shall not be supplied to this specification. Group A retention reports shall be provided in a format acceptable by the Qualifying Activity.

TABLE XII. Group A inspection.

Inspection	Requirement paragraph	Test method paragraph
Visual and mechanical inspection	3.1, 3.3, 3.4, 3.6, and 3.7	4.5.2
Contact engagement and separation forces (nonremovable contacts)	3.5.10	4.5.12
Insulation resistance at ambient temperature 1/	3.5.8	4.5.10
Dielectric withstanding voltage (sea level) 1/	3.5.6	4.5.8

1/ The contractor may use in-process controls for this requirement.

TABLE XIII. Lot and sample size.

Lot size	Sample size
2 to 12	100%
13 to 150	13
151 to 280	20
281 to 500	29
501 to 1,200	34
1,201 to 3,200	42
3,200 to 10,000	50
10,001 to 35,000	60
35,001 to 150,000	74
150,001 to 500,000	90
500,001 and over	102

4.4.2 Retention of qualification. Retention of qualification inspection on connectors shall consist of the examinations and tests shown in table XI. Shipment shall not be held up pending the results of this inspection.

4.4.3 Periodic inspection. Periodic inspection shall consist of group B inspection, except where the results of this inspection show noncompliance with the applicable requirement (4.4.3.1.4). Delivery of products, which have passed group A, shall not be delayed pending the results of these periodic inspections.

4.4.3.1 Group B inspection. Group B inspection shall consist of the inspections specified in table XI, in the order shown. Group B inspection shall be made on sample units which has been randomly selected from inspection lots, which have passed the group A inspection.

4.4.3.1.1 Sampling plan.

Group I: Sample connectors consisting of two mated pairs of each class, of each type, of each style of termination, with the largest insert arrangement and all the nonmetallic materials, including lubricants, of one connector of classes D, K, and M for which retention of qualification is desired shall be selected every 36 months. If production of a particular PIN is not current, the group B tests must take place at the time production is resumed. The testing shall revert to the original schedule, which is applied to a newly qualified product. If group B testing on classes G and N, D and M, or G, N, D, M is desired, one completely assembled plug and receptacle of each class shall be subjected to the examinations and tests in lieu of two of a single class.

Group II: One each of plug and receptacle with the largest insert arrangement being tested shall be submitted.

Group III: Twenty contacts each for pin and socket solder type termination being tested shall be submitted for solderability requirements, and eight pin contacts of each type being tested shall be submitted for contact and pin strength requirements.

4.4.3.1.2 Failures. If any sample units fail to pass group B inspection, the entire sample shall be considered to have failed.

4.4.3.1.3 Disposition of sample units. Sample units, which have been subjected to group B inspection, shall not be delivered on the contract.

4.4.3.1.4 Noncompliance. If a sample fails to pass group B inspection, the manufacturer shall notify the qualifying activity and the cognizant inspection activity of such failure and take corrective action on the materials or processes, or both, as warranted, and on all units of product which can be corrected and which were manufactured using essentially the same materials and processes, and which are considered subject to the same failure. Acceptance and shipment of the product shall be discontinued until corrective action, acceptable to the qualifying activity has been taken. After the corrective action has been taken, group B inspection shall be repeated on additional sample units (all inspections, or the inspection which the original sample failed, at the option of the qualifying activity). Group A inspection may be reinstituted; however, final acceptance and shipment shall be withheld until the group B inspection has shown that the corrective action was successful. In the event of failure after inspection, information concerning the failure shall be made available to the cognizant inspection activity and the qualifying activity.

4.5 Methods of inspection.

4.5.1 Test methods. The following tests and test procedures assure connector integrity within typical operating conditions and applications. Alternate commercial industry standard test methods are allowed. However when and alternate methods are used, the qualifying activity must be notified prior to performance of the test. The test methods described herein are proven methods and shall be the referee method in cases of dispute.

4.5.2 Visual and mechanical inspection. Connectors and contacts shall be examined to verify that the dimensions, materials, design, construction, marking, and workmanship are in accordance with the applicable requirements (see 3.1, 3.3, 3.4, 3.6, and 3.7).

4.5.3 Magnetic permeability (classes M and N) (see 3.5.1). Permeability shall be measured on classes M and N connectors with an instrument conforming to ASTM A342/A342M. The connectors may be wired or unwired, but shall not be carrying current. Requirements shall be as specified in 3.5.1.

4.5.4 Maintenance aging (crimp contact connectors only (see 3.5.2)). Connectors shall be tested in accordance with test procedure EIA-364-24. Installing/removal tools shall be in accordance with the applicable specification sheet (see 3.1). Twenty percent of the contacts in a plug or receptacle, but not less than three contacts per connector mating half, shall be tested.

4.5.5 Contact insertion and removal forces (see 3.5.3). Contacts shall be inserted and removed in accordance with test procedure EIA-364-05. Installing/removal tools shall be in accordance with the applicable specification sheet (see 3.1).

4.5.6 Mating and unmating force (see 3.5.4). Mated connectors shall be tested in accordance with test procedure EIA/ECA-364-13. The rate of mating and unmating shall be 1 to 10 inches per minute.

4.5.7 Contact retention (see 3.5.5). Connectors shall be tested in accordance with test procedure EIA/ECA-364-29. The following details shall apply:

a. Axial direction: Shall be applied in both directions.
b. Axial load: As specified.

4.5.8 Dielectric withstanding voltage (see 3.5.6).

4.5.8.1 Sea level. Unmated connectors shall be tested in accordance with test procedure EIA-364-20, condition I. The applicable test voltages specified in 3.5.6 shall be applied between all adjacent contacts and between the shell and each peripheral contact. Requirements shall be as specified in 3.5.6. For group A inspection testing, voltage may be applied for a minimum of 10 seconds.

4.5.8.2 Altitude. The connectors shall be tested in accordance with test procedure EIA-364-20, condition IV. After 5 minutes at the simulated altitude, the connectors shall be tested as specified in 4.5.8.1.

4.5.9 Cable retention (flat cable only) (see 3.5.7). The unmated wired connector with strain relief, when applicable, shall be mounted by normal mounting means and aligned with the test fixture. An axial force of 8 ounces per contact shall be applied. The force shall be applied 6 inches from the mating face of the connector to the cable and shall pull away from the connector in a direction that will put the maximum stress on the contact-cable interface.

4.5.10 Insulation resistance at ambient temperature (see 3.5.8). Unmated connectors shall be tested in accordance with test procedure EIA/ECA-364-21. The resistance shall be measured between the contact shell and a point including 50 percent, (but not less than four) of the contact pairs adjacent to the contact shell, or between the contact shell and a point including 50 percent, (but not less than six) of the contacts adjacent to the contact shell. The contacts selected shall be those having the closest spacing between measurement points and the measured resistance shall be as specified in 3.5.8.

4.5.11 Contact resistance (nonremovable contacts)(see 3.5.9). Contacts shall be tested in accordance with test procedure EIA-364-06. A minimum of four mated contacts or 20 percent of the mated contacts, whichever is greater, shall be measured in each connector being tested. The following details apply:

a. Wire size: As specified (see 3.1).
b. Preparation: Connectors mated.
c. Test current: Maximum contact current rating (see 3.5.9).
d. Test circuits for nonremovable and classes H and K connectors shall be as shown in accordance with test procedure EIA-364-06. Test circuit for IDC connectors shall be as shown on figure 3.

4.5.11.1 Classes H and K pin contacts. Classes H and K pin contacts shall be mated with counterpart copper based alloy socket contacts for the test specified in 4.5.11.

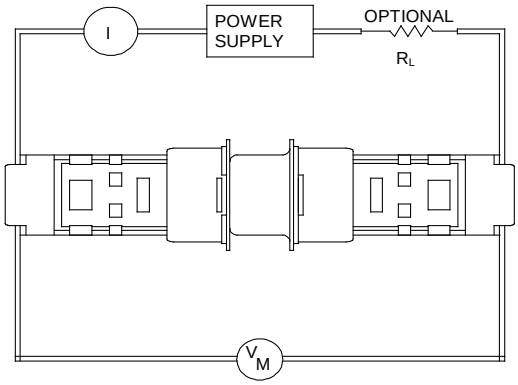

FIGURE 3. Contact resistance test circuit for IDC connectors.

4.5.12 Contact engagement and separation forces (see 3.5.10). Contact engagement and separation forces shall be tested in accordance with test procedure EIA-364-37. Four contacts or 20 percent of the contacts, whichever is greater, shall be measured in each connector being tested. The following details apply:

a. Insert and separate a maximum diameter pin in and from each socket contact, then insert and remove a minimum diameter pin in the same sockets. During separation of the minimum diameter test pin, the minimum separation force shall be 3.5.10.

b. Insert and separate a maximum diameter pin in and from each socket contact three times. During the third cycle, the engagement force shall be 3.5.10.

4.5.13 Temperature cycling (classes G, H, and N) (see 3.5.11). Unmated connectors shall be tested in accordance with test procedure EIA-364-32, condition I, 5 cycles, except that the maximum temperature shall be table VIII. At the completion of the last cycle, the connectors shall be returned to room temperature for further examination and shall meet the requirements specified in 3.5.11.

4.5.13.1 Temperature cycling (classes D, K, and M) (see 3.5.11.1). Mated connectors shall be tested in accordance with test procedure EIA-364-32, condition I, 5 cycles, except that the maximum temperature shall be table VIII. At the completion of the last cycle, the connectors shall be returned to room temperature for further examination and shall meet the requirements specified in 3.5.11.1.

4.5.14 Air leakage (classes H and K connectors) (see 3.5.12). Classes H and K connectors shall be mounted in a manner suitable for application of one atmosphere pressure differential across the connectors, and tested in accordance with test procedure EIA-364-02. The leakage rate shall be determined while pressurized air or gas, containing not less than 10 percent helium by volume, is applied to the connector. Requirements shall be 3.5.12.

4.5.15 Humidity (see 3.5.13). The connectors shall be fully wired. The unmated and wired connectors shall be subjected to a humidity test in accordance with test procedure EIA-364-31, method IV and with the following exceptions and details 3.5.13.

a. After the 24 hour conditioning period, the insulation resistance shall be measured.

b. Upon completion of step 6 of the final cycle, connectors shall be removed from the chamber and surface moisture removed from the insulators. Immediately following removal of surface moisture, the insulation resistance tests (see 4.5.10) and the sea level dielectric withstanding voltage test (see 4.5.8.1) shall be conducted.

4.5.16 Vibration (see 3.5.14). The connector assembly shall be mounted as specified herein and vibrated in accordance with test procedure EIA-364-28, test condition IV. All contacts shall be wired in series with at least 100 milliamperes of current allowed to flow. A suitable instrument shall be employed to monitor the current flow and to indicate any discontinuity or interruption of current flow. Requirements shall be 3.5.14.

4.5.16.1 Connector mounting. Each receptacle shall be mounted on a suitable fixture, which in turn shall be attached to a vibration table. A suitable sensor shall monitor the receptacles at a point on or near the receptacle. A counterpart plug shall be engaged with the receptacle and shall not be held by any locking means. The wire bundles or cables attached to the receptacle shall be clamped to nonvibrating points at least 8 inches from the rear of the receptacle. The wire bundles or cables attached to the plug shall be clamped to a vibrating point 4 ±1/2 inches from the rear of the plug. The clamping length shall be chosen to avoid resonance of the wire bundles or cables. To eliminate possible wire breakage when testing connectors wired with number 28 AWG wire, a strain relief clamp that mounts directly to the connector and reduces the clamping length of the wire bundle to a minimum is permitted.

4.5.16.2 Printed wiring board connector mounting. Right angle connectors shall have the receptacle mounted on an epoxy glass printed wiring board, 1/16 inch minimum (plus added tolerances) thick and clamped to a suitable fixture which in turn shall be firmly mounted on the vibration table. Each plug shall be mounted in the normal manner at one end of the rectangular epoxy glass laminate board. The board shall be 1/16 inch minimum thick.

4.5.17 Shock (see 3.5.15). Mated connectors shall be subjected to test condition E, in accordance with test procedure EIA-364-27. One shock shall be applied in each direction of the three major axes of the connectors. Receptacles shall be mounted similar to the mounting specified in 4.5.16.1. Plugs shall be engaged with the receptacles and shall not be held by any locking means. All contacts shall be wired in series with a minimum of 100 milliamperes of current allowed to flow. The wire bundles or cables shall be clamped to structures that move. A minimum of 8 inches of wire or cable shall be unsupported behind the rear of the receptacle and 4 ±1/2 inches of wire or cable shall be unsupported behind the rear of the plug. A suitable instrument shall be employed to indicate any discontinuity or interruption of current flow. Requirement shall be 3.5.15.

4.5.17.1 Printed wiring board connector mounting. Mounting method 4.5.16.2.

4.5.18 Durability (see 3.5.16). Connectors shall be tested in accordance with test procedure EAI-364-09. The following details apply:

a. Mated and unmated 500 times at a rate of 200 ±100 cycles per hour.

b. After 500 cycles mated connectors shall be subjected to salt spray.

4.5.19 Salt spray (corrosion) (see 3.5.17). Mated connectors shall be subjected to a salt spray test in accordance with test procedure EIA/ECA-364-26, test condition B. After exposure, connectors shall be thoroughly washed with tap water to remove all salt deposits and then shall be dried in a circulating air oven at temperature of 38°C ±3°C for a period of 12 hours. They shall then be visually examined for evidence of corrosion and subjected to the contact resistance test specified in 4.5.11 and the mating and unmating force test 4.5.6.

4.5.20 Oversize pin exclusion (see 3.5.18). A hardened steel oversize pin, 3.5.18, shall be placed in a position centered and parallel to the axis of the socket contact. A 12-ounce axial force shall then be applied tending to force the test pin into the socket contact. After completion of the test, the contacts shall be subjected to the contact resistance test as specified in 4.5.11. This test shall be performed on 20 percent or a minimum of four, of the socket contacts in each connector.

4.5.21 Resistance to test probe damage (see 3.5.19). Socket contacts shall be tested in accordance with test procedure EIA-364-25. The following details shall apply:

a. The test shall be performed on 20 percent of the contacts, or a minimum of four contacts.

b. After testing, the contacts shall meet the requirements specified in 3.5.19 (contact engagement and separation).

c. Type 1 or type 2 contact holding device.

d. Probe damage tool shall be inserted into the contact to the following depths:

Contact size	Holding fixture	
	Type 1	Type 2
20	.202 ±.005, .077 ±.005	.250 ±.005, .125 ±.007
IDC 20	.202 ±.005, .077 ±.005	.250 ±.005, .125 ±.007

e. The diameter of the handle (.190) is not applicable.

4.5.22 Fluid immersion (see 3.5.20). Connectors shall be tested in accordance with test procedure EIA-364-10. The following details apply:

a. Test fluid (a).

b. Test fluid (d).

4.5.23 Insert retention (see 3.5.21). Unmated connectors shall be tested in accordance with test procedure EIA-364-35:

a. Force to be applied: 10 lb/in^2 per second until pressure specified in 3.5.21 is reached.

b. For classes D, G, M, and N connectors, the wired contacts may be removed for convenience of testing.

4.5.24 Solderability (see 3.5.23). Solderability, nonremovable contact terminations except wrappost, IDC, and crimp, shall be tested in accordance with MIL-STD-202-208 (type R or RMA flux may be used). Solder cup terminations shall be tested in the following manner:

a. Test samples shall not be cleaned prior to soldering.

b. Test sample connectors shall have the solder cups dipped in, or brushed with, flux type RMA just prior to the application of solder.

c. A pencil type soldering iron shall be used, with temperature regulated to 360°C ±10°C to heat the test solder cups.

d. After heating the test solder cups to a solder melt temperature, 63/37 tin-lead type solder shall be applied to fill the solder cup to a capacity which will result in solder wetting the entire cup surface and forming a solder fill meniscus across the open portion of the solder cup.

e. The finished solder fill shall be smooth and slightly concave with clear wetting and adhesion to all internal surfaces of the solder cup. Inspection shall be aided by a 10X optical aid.

f. Twenty percent but not less than seven contacts of test specimen shall be tested.

4.5.25 Contact pin strength (nonremovable contacts) (see 3.5.22). Contacts shall be mounted in a suitable fixture and a gradual load applied to the pin as shown on figure 4. The rate of travel of the testing machine shall not exceed 1 inch per minute, and the load shall be maintained for one minute +15, -0 seconds. The permanent set shall be the difference between the initial and final position of the load application after load removal.

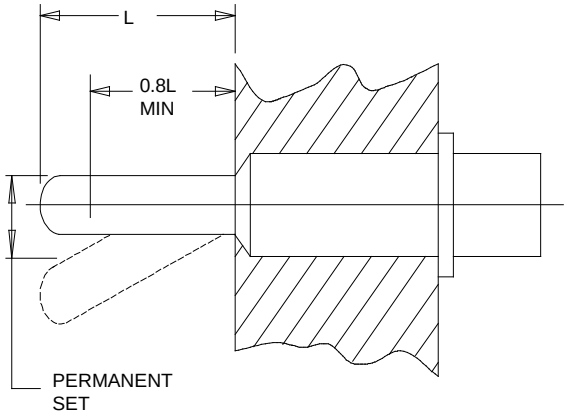

Mating end size	moment (lb-in.) (unless otherwise specified see 3.1)
20	.53
22	.22
23	.16
24	.13

FIGURE 4. Contact pin strength.

4.5.26 Thermal vacuum outgassing (classes D, K, and M) (see 3.5.24). All nonmetallic materials, including lubricants, used in the manufacture of these connectors shall be tested in accordance with JSC SP-R-0022 or ASTM E595 to determine the maximum TML of the original specimen mass and the VCM content of the original specimen mass. For the purpose of determining TML and VCM of connectors, the original specimen mass shall be the assembled connector mass excluding metallic parts. The TMC and VCM for the connectors may be determined by testing the specific materials of the connector and calculating the loss for the connector.

4.5.27 Resistance to solder heat (solderable, nonremovable contacts only) (see 3.5.25). Unmated connectors with printed wiring board terminations shall be tested in accordance with MIL-STD-202-210, condition C. Unmated connectors with solder terminations shall be tested as follows:

a. Where applicable (not for printed circuit board type connectors) the appropriate copper wire size, 2 to 4 inches in length, properly prepared for the applicable solder cup size shall be inserted into the contact termination. Seven contacts or twenty percent of the contacts, whichever is greater, shall be tested.

b. The test specimens shall be fluxed accordingly with flux liquid or other techniques (see 3.3.1).

c. The solder iron shall be heated to a temperature of 360°C ±10°C. It shall be applied to the termination for a period necessary to hold the solder in a liquid state for 4 to 5 seconds. Solder type to be used is SN-63 in accordance with J-STD-006.

d. After application, the soldering iron shall be removed and a visual and mechanical inspection performed. The visual inspection shall be at 10X.

e. The connector shall show no evidence of distortion or damage to any area of the connector housing. The contact shall meet the contact retention requirement (see 3.5.5).

5. PACKAGING

5.1 Packaging. For acquisition purposes, the packaging requirement shall be the contract or order (see 6.2). When packaging of materiel is to be performed by DoD or in-house contractor personnel, these personnel need to contact the responsible packaging activity to ascertain requisite packaging requirements. Packaging requirements are maintained by the Inventory Control Point's packaging activity within the Military Service or Defense Agency, or within the military service's system commands. Packaging data retrieval is available from the managing Military Department or Defense Agency's automated packaging files, CD-ROM products, or by contacting the responsible packaging activity.

6. NOTES

(This section contains information of a general or explanatory nature that may be helpful, but is not mandatory.)

6.1 Intended use. These connectors are intended for general military use. Connector installations should be designed to assure that connectors are mated within the limits specified in 3.4.5. The class and types of connectors are intended for application as follows:

a. Classes G and N connectors are intended for use in applications where the operating temperature range -55° to +125°C is experienced. Crimp contact connectors have the additional advantage of possessing removable crimp-type contacts.

b. Class N connectors are intended for use in applications where the presence of residual magnetism must be held to very low levels to avoid interference with nearby sensitive instrumentation.

c. Class H receptacles are intended for use in applications where atmospheric pressures must be contained by the connectors across the wall or panels on which they are mounted. If air leakage requirements are critical, a class H connector should be used.

d. Crimp contact connectors should have contacts present in all positions when the connector is installed.

e. Classes D, K, and M connectors are for high reliability space applications.

f. Connector installations should be designed to assure that connectors are mated within the limits specified in 3.4.5.

6.2 Acquisition requirements. Acquisition documents must specify the following:

a. Title, number, and date of the specification.

b. Title, number, and date of the applicable specification sheet and the complete PIN (see 3.1).

c. Packaging requirement (see 5.1).

6.3 Qualification. With respect to products requiring qualification, awards will be made only for products which are, at the time of award of contract, qualified for inclusion in Qualified Products List QPL No. 24308 whether or not such products have actually been so listed by that date. The attention of the contractors is called to these requirements, and manufacturers are urged to arrange to have the products that they propose to offer to the Federal Government tested for qualification in order that they may be eligible to be awarded contracts or orders for the products covered by this specification. Information pertaining to qualification of products may be obtained from Defense Supply Center Columbus (DSCC-VQ), Document Control Unit, Columbus, OH 43218-3990 or e mail vqchief@dla.mil. An online listing of products qualified to this specification may be found in the Qualified Products Database (QPD) at https://assist.dla.mil.

6.4 Copyright notice. All information disclosed in this specification and related specification sheets and military standards which are or may be copyrighted by ITT Cannon Electric are reproduced herein with the express permission of the copyright owner.

6.5 Definitions.

6.5.1 Overall finish. A finish having a specified minimum thickness applied over the entire surface area, such as barrel plating technique or other nonselective plating techniques, etc.

6.5.2 Localized finish. A finish having a specified minimum thickness applied to a definite area, such as, clad, inlay, welded dot, selective plating technique, etc.

6.5.3 Gold finish. A finish having an unspecified thickness of gold not requiring a specific thickness.

6.6 Specification sheet selection. Use table XIV to determine desired connector specification sheet from the features listed.

6.7 Tin whisker growth. The use of alloys with tin content greater than 97 percent may exhibit tin whisker growth problems after manufacture. Tin whiskers may occur anytime from a day to years after, and can develop under typical operation conditions on products that use such materials. Conformal coatings applied over top of a whisker-prone surface will not prevent the formation of tin whiskers. Alloys of 3 percent lead have shown to inhibit the growth of tin whiskers.

TABLE XIV. Specification sheet selection .

Specification sheet	Class	Mounting method	Contact type	Termination type	Contact size	Positions available 1/
M24308/1	D, G	Panel	Socket	Solder cup 2/	20 22D	9,15, 25, 37, 50 none
M24308/2	D, G	Panel	Socket	Crimp	20 22D	9,15, 25, 37, 50 15, 26, 44, 62, 78, 104
M24308/3	D, G	Panel	Pin	Solder cup 2/	20 22D	9,15, 25, 37, 50 none
M24308/4	D, G	Panel	Pin	Crimp	20 22D	9,15, 25, 37, 50 15, 26, 44, 62, 78, 104
M24308/5	M, N	Panel	Socket	Solder cup 2/	20 22D	9,15, 25, 37, 50 none
M24308/6	M, N	Panel	Socket	Crimp	20 22D	9,15, 25, 37, 50 15, 26, 44, 62, 78, 104
M24308/7	M, N	Panel	Pin	Solder cup 2/	20 22D	9,15, 25, 37, 50 none
M24308/8	M, N	Panel	Pin	Crimp	20 22D	9,15, 25, 37, 50 15, 26, 44, 62, 78, 104
M24308/9	H, K	Panel	Pin	Solder cup, eyelet 2/	20 22D	9,15, 25, 37, 50 none
M24308/23	G	PCB	Socket	Straight, right angle	20 22D	9,15, 25, 37, 50 15, 26, 44, 62, 78
M24308/24	G	PCB	Pin	Straight, right angle	20 22D	9,15, 25, 37, 50 15, 26, 44, 62, 78
M24308/25	Male screw lock					
M24308/26	Female screw lock					
M24308/27	G	Panel	Socket	IDC	20 22D	9,15, 25, 37
M24308/28	G	Panel	Pin	IDC	20 22D	9,15, 25, 37

1/ See Appendix A.
2/ See Appendix B.

6.8 Subject term (key word) listing.

Contacts
Crimp
Current
Finish
Heat
Humidity
Inspection
Insulation displacement
Magnetic permeability
Materials
Mating force
Military standards
Plug
Pin
Printed wiring board
Qualification
Sampling
Socket
Solder
Solderability
Temperature
Voltage

6.9 Amendment notations. The margins of this specification are marked with vertical lines to indicate modifications generated by this amendment. This was done as a convenience only and the Government assumes no liability whatsoever for any inaccuracies in these notations. Bidders and contractors are cautioned to evaluate the requirements of this document based on the entire content irrespective of the marginal notations.

INSERT ARRANGEMENTS, ELECTRICAL CONNECTOR, SHELL SIZES 1 THROUGH 6

A.1 SCOPE

A.1.1 Scope. This appendix covers insert arrangements for use with MIL-DTL-24308 rectangular nonenvironmental, polarized shell, miniature, rack and panel connectors. This Appendix is a mandatory part of the specification. The information contained herein is intended for compliance.

A.2 APPLICABLE DOCUMENTS

(This section not applicable to this appendix.)

A.3 GENERAL REQUIREMENTS

(This section not applicable to this appendix)

A.4 DETAIL REQUIREMENTS

A.4.1 Insert arrangements. See table A-I below and figures A-1 through A-6.

TABLE A-I. Insert arrangements.

Figure number	Arrangement number	Shell size	Contacts		Superseded MS Number
			No. 22D	No. 20	
A-1	1	1	-	9	MS18273-1
	2		15	-	MS18273-2
A-2	1	2	-	15	MS18274-1
	2		26	-	MS18274-2
A-3	1	3	-	25	MS18275-1
	2		44	-	MS18275-2
A-4	1	4	-	37	MS18276-1
	2		62	-	MS18276-2
A-5	1	5	-	50	MS18277-1
	2		78	-	MS18277-2
A-6	1	6	104	-	MS14004-1

A.4.1.1 Dimensions. Dimensions shall be as specified in the applicable section of this appendix and the following:

a. Dimensions are in inches.
b. Metric equivalents are given for information only.
c. All dimensions are TP (true position).
d. Contact holes in insert shall be located on TP within a .005 (0.13 mm) diameter circle. Maximum material condition applies.
e. Markings are shown for the pin insert front. Socket inserts are opposite.
f. In the event of a conflict between the text of this appendix and the references cited herein, the text of this appendix shall take precedence.

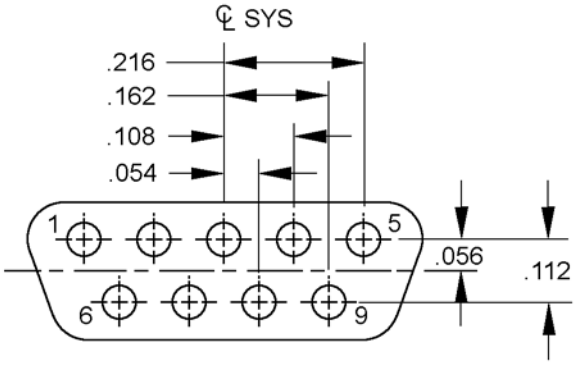

ARRANGEMENT 1
9 SIZE 20 CONTACTS

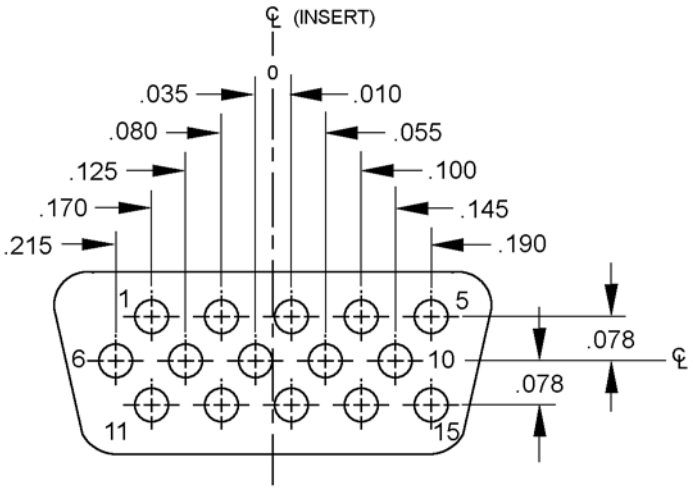

ARRANGEMENT 2
15 SIZE 22D CONTACTS

FIGURE A-1. Shell size 1.

Inches	mm
.010	0.25
.035	0.89
.054	1.37
.055	1.40
.056	1.42
.078	1.98
.080	2.03
.100	2.54
.108	2.74
.112	2.84
.125	3.18
.145	3.68
.162	4.11
.170	4.32
.190	4.83
.215	5.46
.216	5.49

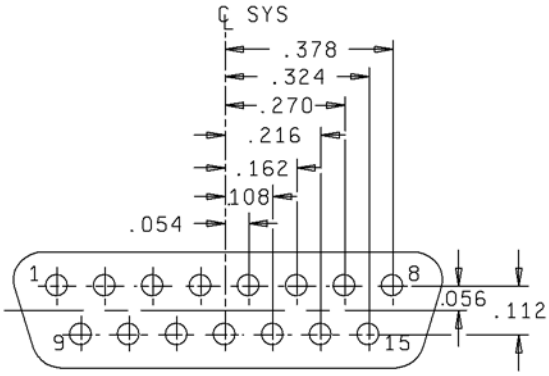

ARRANGEMENT 1
15 size 20 contacts.

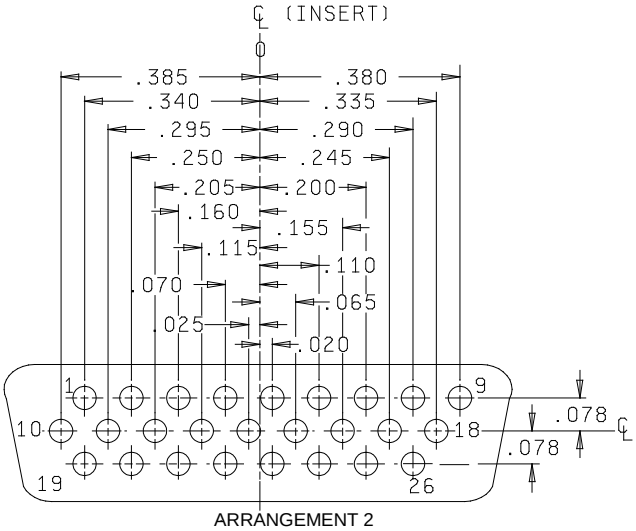

ARRANGEMENT 2
26 size 22D contacts.

Inches	mm	Inches	mm
.020	0.51	.200	5.08
.025	0.64	.205	5.21
.054	1.37	.216	5.49
.056	1.42	.245	6.22
.065	1.65	.250	6.35
.070	1.78	.270	6.86
.078	1.98	.290	7.37
.108	2.74	.295	7.49
.110	2.79	.324	8.23
.112	2.84	.335	8.51
.115	2.92	.340	8.64
.155	3.94	.378	9.60
.160	4.06	.380	9.65
.162	4.11	.385	9.78

NOTES:
1. Dimensions are in inches.
2. Metric equivalents are given for information only.

FIGURE A-2. Shell size 2.

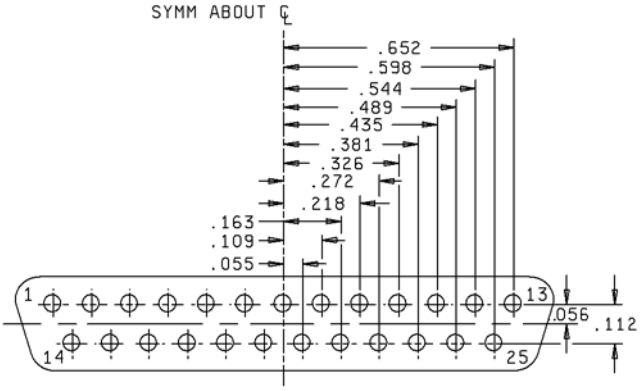

ARRANGEMENT 1
25 size 20 contacts

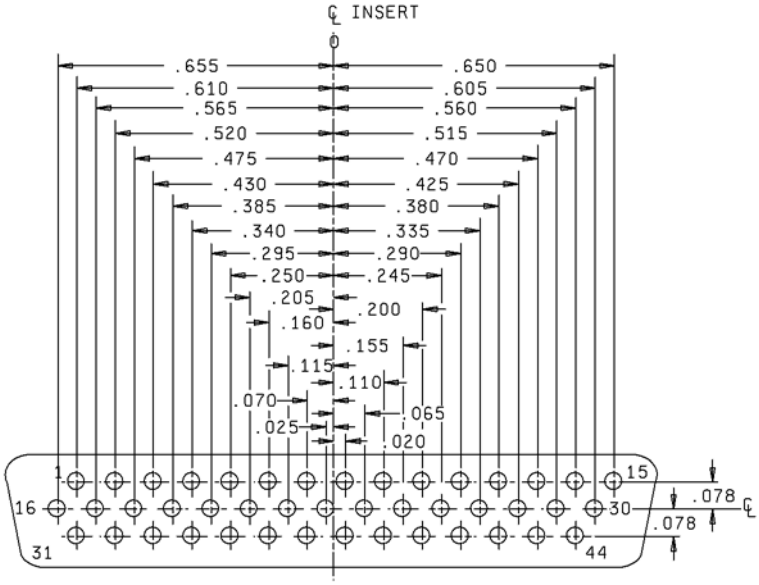

ARRANGEMENT 2
44 size 22D contacts

Inches	mm	Inches	mm	Inches	mm	Inches	mm
.020	0.51	.155	3.94	.326	8.28	.489	12.42
.025	0.64	.160	4.06	.335	8.51	.515	13.08
.055	1.40	.163	4.14	.340	8.64	.520	13.21
.056	1.42	.200	5.08	.380	9.65	.544	13.82
.065	1.65	.205	5.21	.381	9.68	.560	14.22
.070	1.78	.218	5.54	.385	9.78	.565	14.35
.078	1.98	.245	6.22	.425	10.80	.598	15.19
.109	2.77	.250	6.35	.430	10.92	.605	15.37
.110	2.79	.272	6.91	.435	11.05	.610	15.49
.112	2.84	.290	7.37	.470	11.94	.650	16.51
.115	2.92	.295	7.49	.475	12.06	.652	16.56
						.655	16.64

NOTES:
1. Dimensions are in inches.
2. Metric equivalents are given for information only.

FIGURE A-3. Shell size 3.

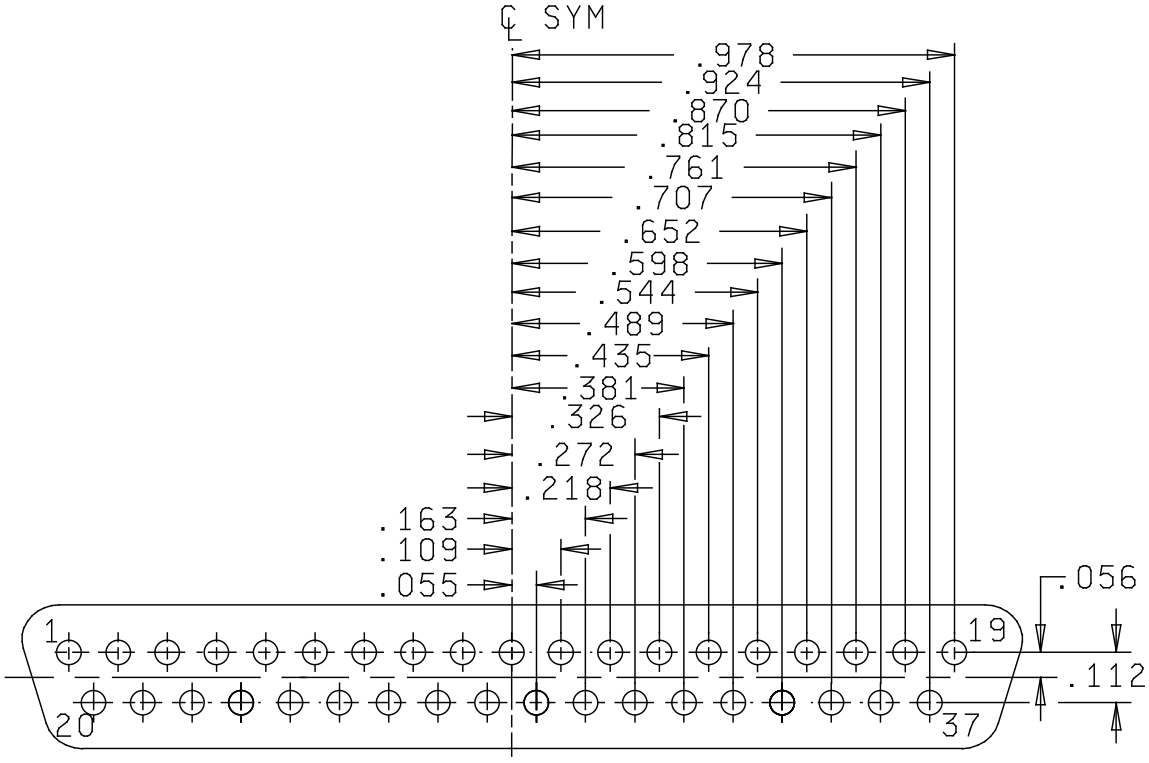

ARRANGEMENT 1
37 size 20 contacts

FIGURE A-4. Shell size 4.

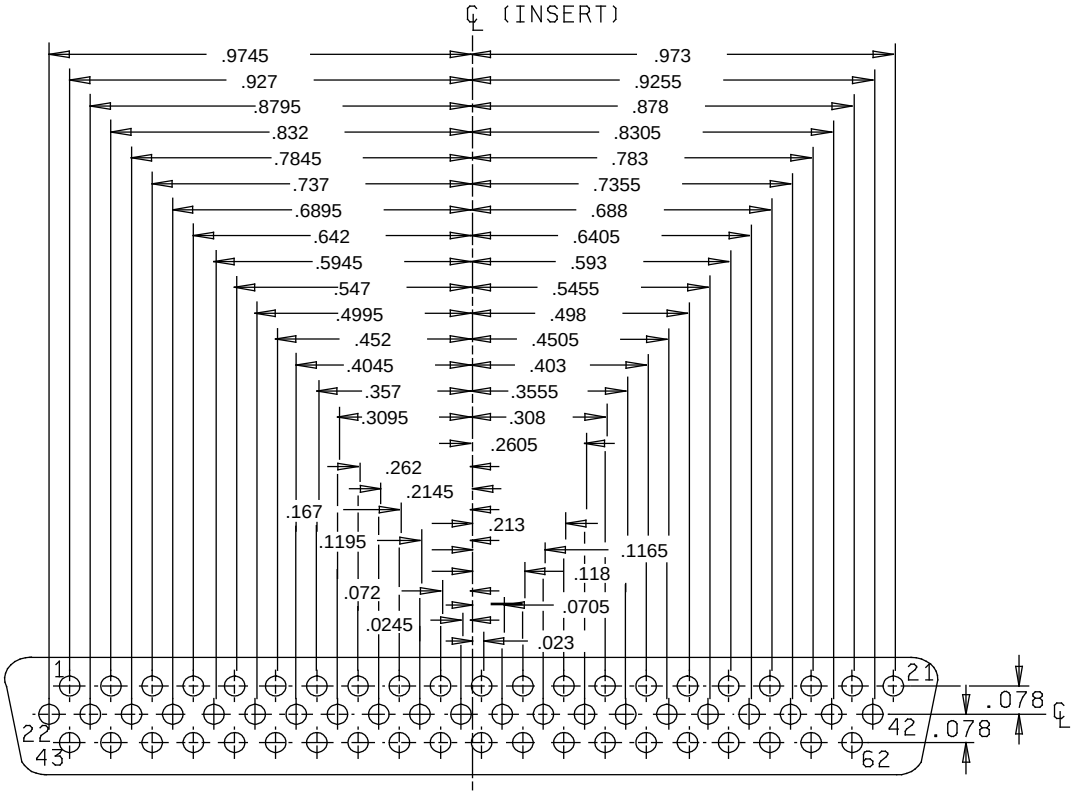

ARRANGEMENT 2
62 size 22D contacts

Inches	mm	Inches	mm	Inches	mm	Inches	mm
.023	0.58	.218	5.54	.498	12.65	.761	19.33
.0245	0.622	.2605	6.617	.4995	12.687	.783	19.89
.055	1.40	.262	6.65	.544	13.82	.7845	19.926
.056	1.42	.272	6.91	.5455	13.856	.815	20.70
.0705	1.791	.308	7.82	.547	13.89	.8305	21.095
.072	1.83	.3095	7.861	.593	15.06	.832	21.13
.078	1.98	.326	8.28	.5945	15.100	.870	22.10
.109	2.77	.3555	9.030	.598	15.19	.878	22.30
.112	2.84	.357	9.07	.6405	16.269	.8795	22.339
.118	3.00	.381	9.68	.642	16.31	.924	23.47
.1195	3.035	.403	10.24	.652	16.56	.9255	23.508
.163	4.14	.4045	10.27	.688	17.48	.927	23.55
.1655	4.204	.435	11.05	.6895	17.513	.973	24.71
.167	4.24	.4505	11.443	.707	17.96	.9745	24.752
.213	5.41	.452	11.48	.7355	18.682	.978	24.84
.2145	5.448	.489	12.42	.737	18.72		

NOTES:
1. Dimensions are in inches.
2. Metric equivalents are given for information only.

FIGURE A-4. Shell size 4 - Continued.

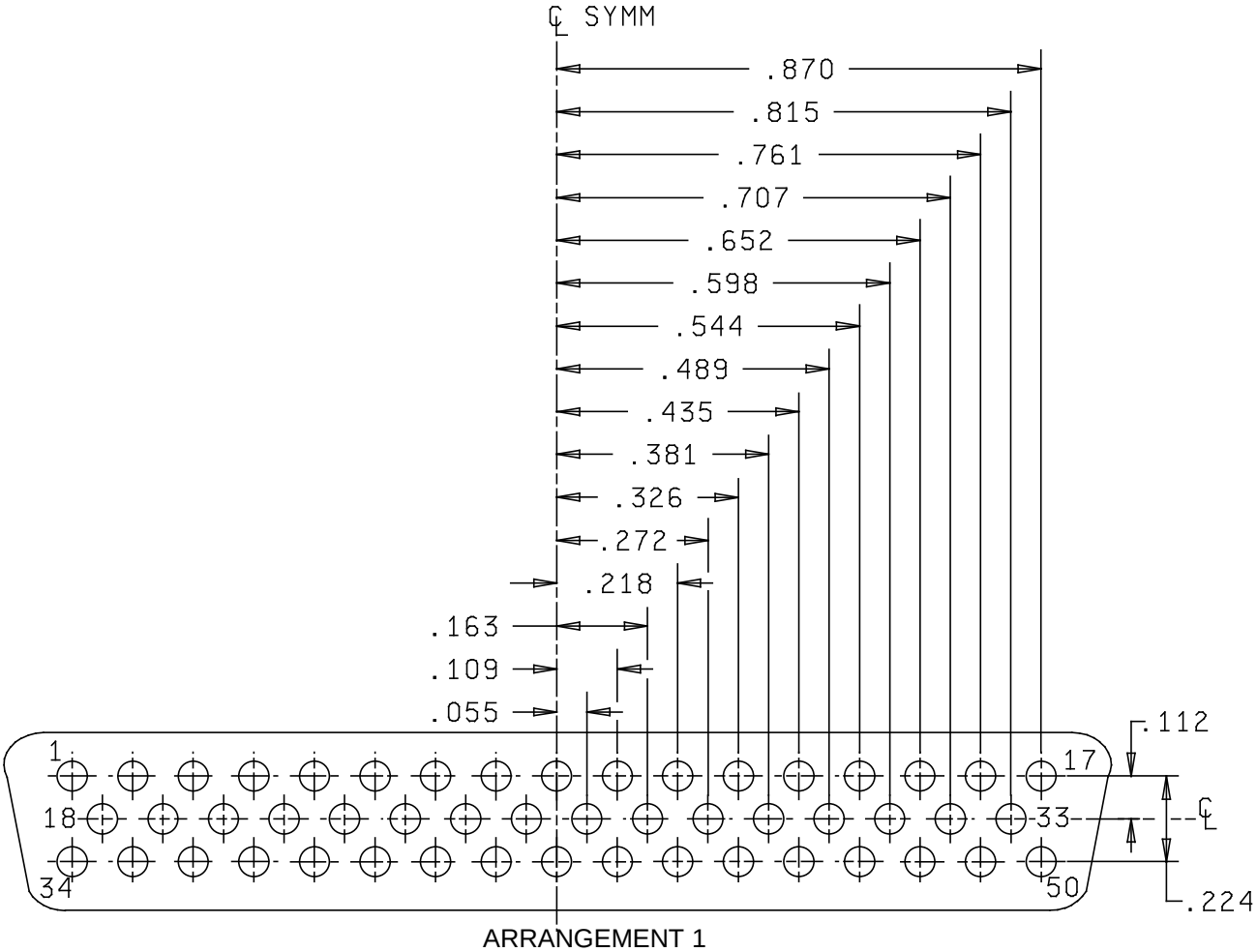

ARRANGEMENT 1
50 size 20 contacts

FIGURE A-5. Shell size 5.

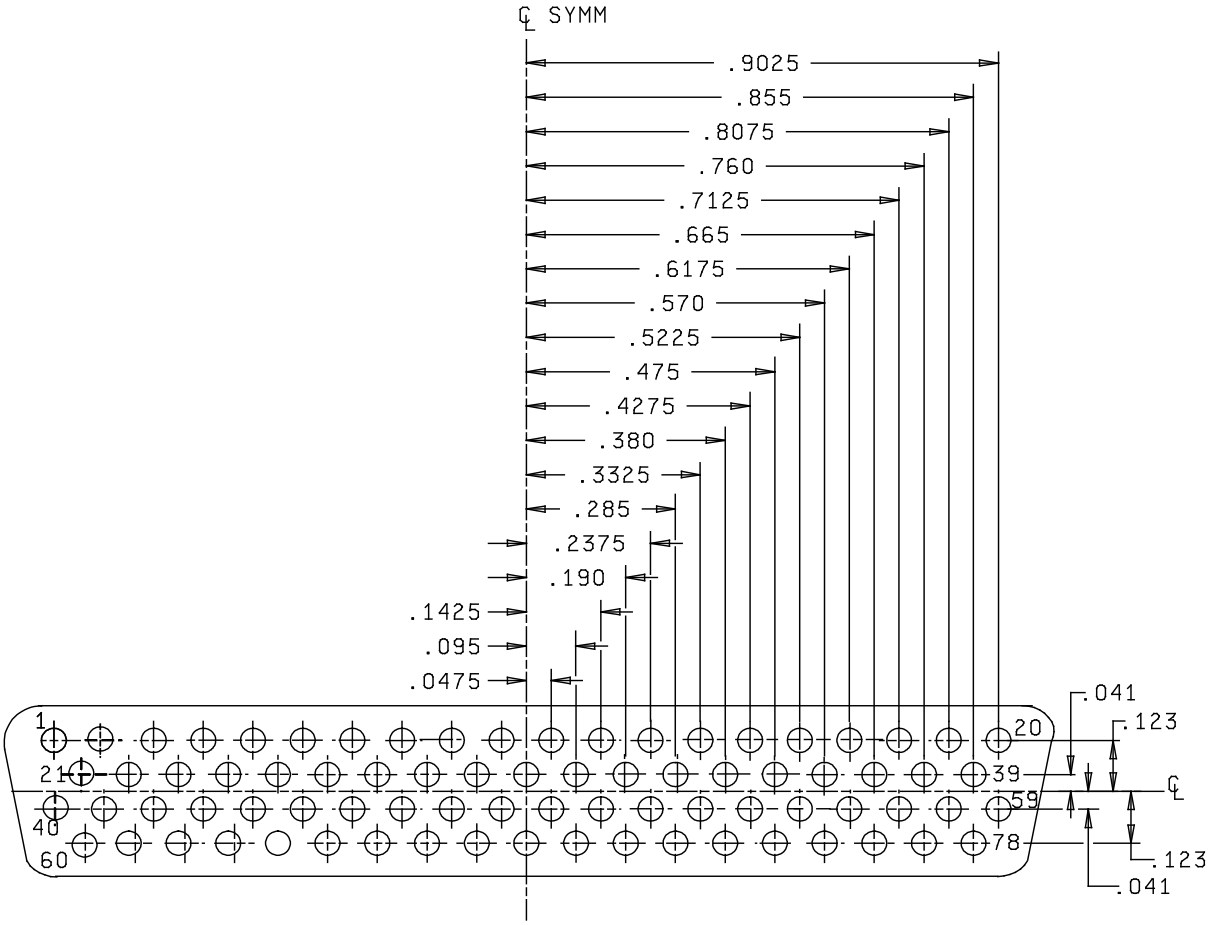

ARRANGEMENT 2
78 size 22D contacts

Inches	mm	Inches	mm	Inches	mm	Inches	mm
.041	1.04	.218	5.54	.435	11.05	.707	17.96
.0475	1.206	.224	5.69	.475	12.07	.7125	18.098
.055	1.40	.2375	6.033	.489	12.42	.760	19.30
.095	2.41	.272	6.91	.5225	13.272	.761	19.33
.109	2.77	.285	7.24	.544	13.82	.8075	20.511
.112	2.84	.326	8.28	.570	14.48	.815	20.70
.123	3.12	.3325	8.446	.598	15.19	.855	21.72
.1425	3.620	.380	9.65	.6175	15.685	.870	22.10
.163	4.14	.381	9.68	.652	16.56	.9025	22.924
.190	4.83	.4275	10.859	.665	16.89		

NOTES:
1. Dimensions are in inches.
2. Metric equivalents are given for information only.

FIGURE A-5. Shell size 5 - Continued.

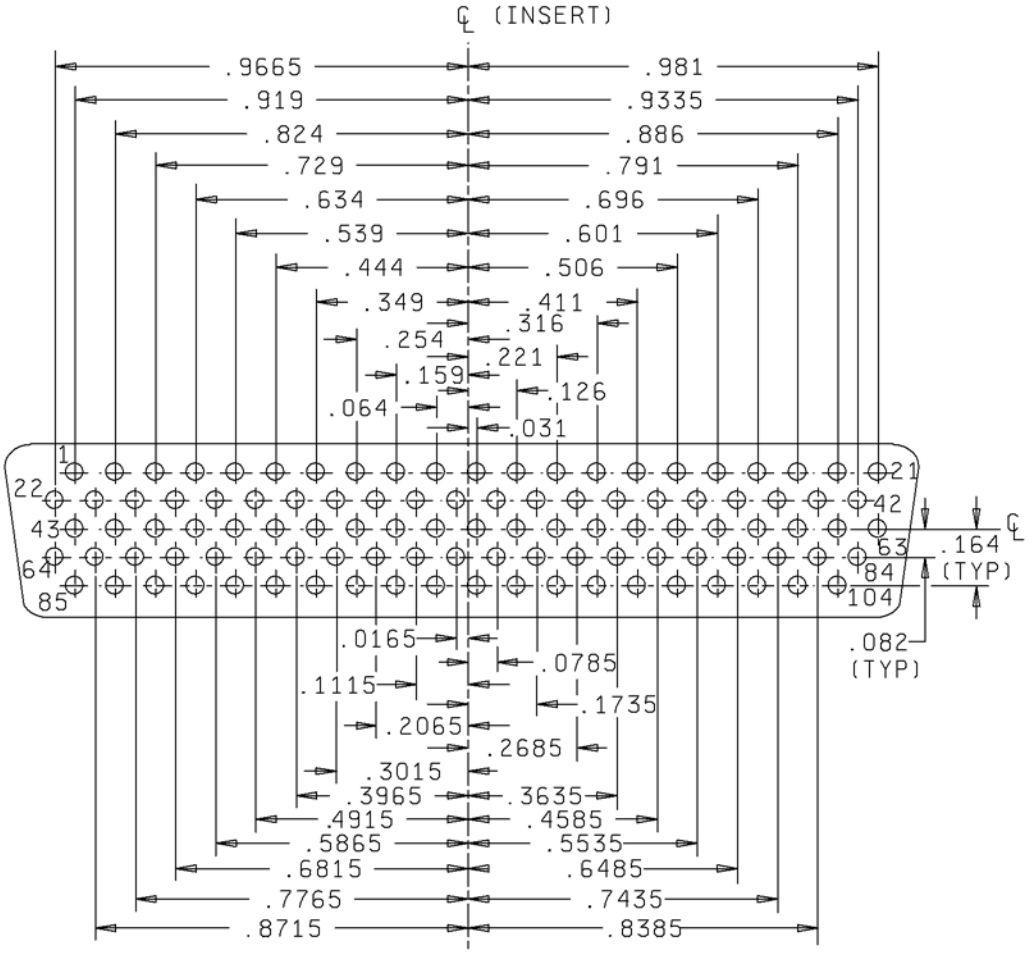

ARRANGEMENT 1
104 size 22D contacts

Inches	mm	Inches	mm	Inches	mm	Inches	mm
.0165	0.419	.221	5.61	.4915	12.484	.7435	18.885
.031	0.79	.254	6.45	.506	12.85	.7765	19.723
.064	1.63	.2685	6.820	.539	13.69	.791	20.09
.0785	1.994	.3015	7.658	.5535	14.059	.824	20.93
.082	2.08	.316	8.03	.5865	14.897	.8385	21.298
.1115	2.832	.349	8.86	.601	15.27	.8715	22.136
.126	3.20	.3635	9.233	.634	16.10	.886	22.50
.159	4.04	.3965	10.071	.6485	16.472	.919	23.34
.164	4.17	.411	10.44	.6815	17.310	.9335	23.711
.1735	4.407	.444	11.28	.696	17.68	.9665	24.549
.2065	5.245	.4585	11.646	.729	18.52	.981	24.92

NOTES:
1. Dimensions are in inches.
2. Metric equivalents are given for information only.

FIGURE A-6. Shell size 6.

CONTACT PIN AND SOCKET CLASSES G, N, AND H SOLDERTYPE, NON-REMOVABLE

B.1 SCOPE

B1.1 Scope. This appendix covers contacts, pin and socket, classes G, N and H solder type, non-removable for use with MIL-DTL-24308 rectangular, nonenvironmental, polarized shell, miniature, rack and panel connectors. This Appendix is a mandatory part of the specification. The information contained herein is intended for compliance.

B.2 APPLICABLE DOCUMENTS

(This section not applicable to this appendix.)

B.3 GENERAL REQUIREMENTS

(This section not applicable to this appendix.)

B.4 DETAIL REQUIREMENTS

B.4.1 Dimensions and configurations. See table B-I and figures B-1 through B-6. The following details apply:

a. Dimensions are in inches.
b. Metric equivalents (to the nearest .01 mm) are given for information only.
c. Dimensions are after plating.
d. Reference documents shall be of the issue in effect on the date of invitation for bids.
e. For design feature purposes, this appendix takes precedence over procurement documents referenced herein.
f. Lock ring optional - alternate retention for classes G and N connectors, figures B-1 and B-2.

TABLE B-I. Contact configurations.

Figure number	Size	Contact Type	Termination	Class	Superseded MS number
B-1	20	Socket	Solder cup	G, N	MS18281-1
B-2	20	Pin	Solder cup	G, N	MS18281-2
B-3	20	Pin	Eyelet	H	MS18281-3
B-4	20	Pin	Solder cup	H	MS18281-4
B-5	22D	Socket	Solder cup	G,N	MS18281-5
B-6	22D	Pin	Solder cup	G,N	MS18281-6

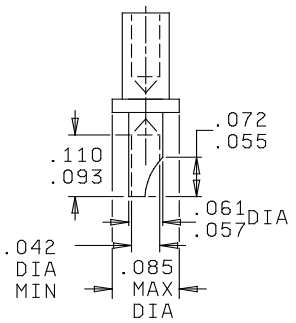

FIGURE B-1. Socket, size 20 (solder cup) for connector classes G, M, N, and D.

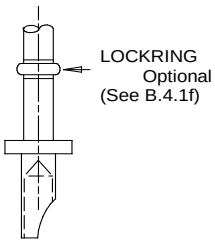

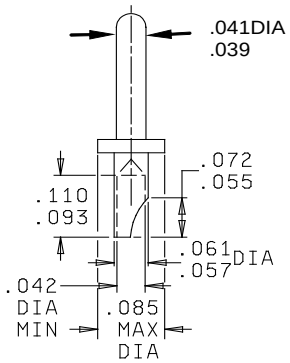

FIGURE B-2. Pin, size 20 (solder cup) for connector classes G,M ,N, and D.

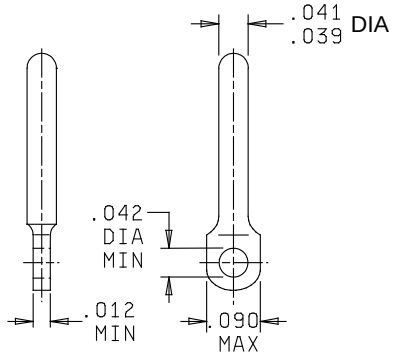

FIGURE B-3. Pin, size 20 eyelet for connector class H.

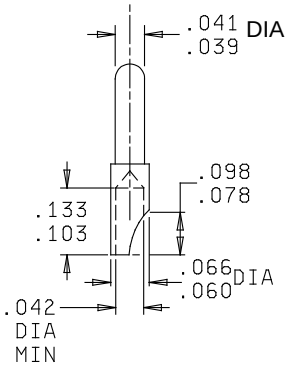

FIGURE B-4. Pin, size 20 solder cup for connector class H.

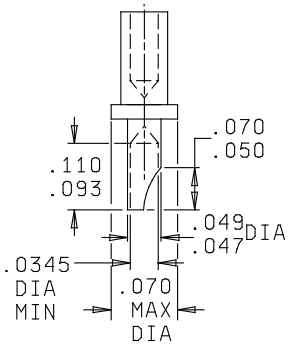

FIGURE B-5. Socket, size 22D (solder cup) for connector classes G and N.

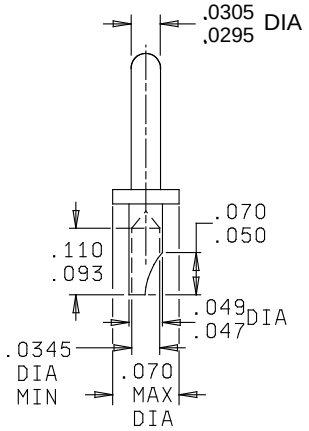

FIGURE B-6. Pin, size 22D (solder cup) for connector classes G and N.

Inches	mm	Inches	mm	Inches	mm
.012	.30	.050	1.27	.078	1.98
.0295	.749	.055	1.40	.085	2.16
.0305	.775	.057	1.45	.090	2.29
.0345	.876	.060	1.52	.093	2.36
.039	.99	.061	1.55	.098	2.49
.041	1.04	.066	1.68	.103	2.62
.042	1.07	.070	1.78	.110	2.79
.047	1.19	.072	1.83	.133	3.38
.049	1.24				

CONCLUDING MATERIAL

Custodians:
Army - CR
Navy - EC
Air Force - 85
NASA - NA
DLA - CC

Review activities:
Army - AT, CR4, MI
Navy - AS, CG, MC, SH
Air Force - 99
MISC - MDA

Preparing activity:
DLA - CC

(Project 5935-2016-037)

NOTE: The activities listed above were interested in this document as of the date of this document. Since organizations and responsibilities can change, you should verify the currency of the information above using the ASSIST Online database at https://assist.dla.mil.