INCH-POUND
MIL-DTL-24211/2E
6 November 2013
SUPERSEDING
MIL-DTL-24211/2D
20 March 2009

DETAIL SPECIFICATION SHEET

GASKETS, WAVEGUIDE FLANGE (FLAT FACE)

This specification is approved for use by all Departments and Agencies of the Department of Defense.

The complete requirements for procuring the gaskets described herein shall consist of this specification sheet and MIL-DTL-24211.

REQUIREMENTS:

Dimensions and configuration: See figure 1.

Reference data: See table I.

Part number: M24211/2-(number taken from figure 1).

TABLE I. Reference data.

Part number M24211/2-	Used with flanges M3922/	Part number M24211/2-	Used with flanges M3922/
001	52-001, 52-002	010	52-019, 52-020
002	52-003, 52-004	011	52-021, 52-022
003	52-005, 52-006	012	XX-001
004	52-007, 52-008	013	XX-002
005	52-009, 52-010	014	XX-003
006	52-011, 52-012	015	XX-004
007	52-013, 52-014	016	XX-005
008	52-015, 52-016	017	XX-006
009	52-017, 52-018	018	XX-007
		019	75-15, 75-16

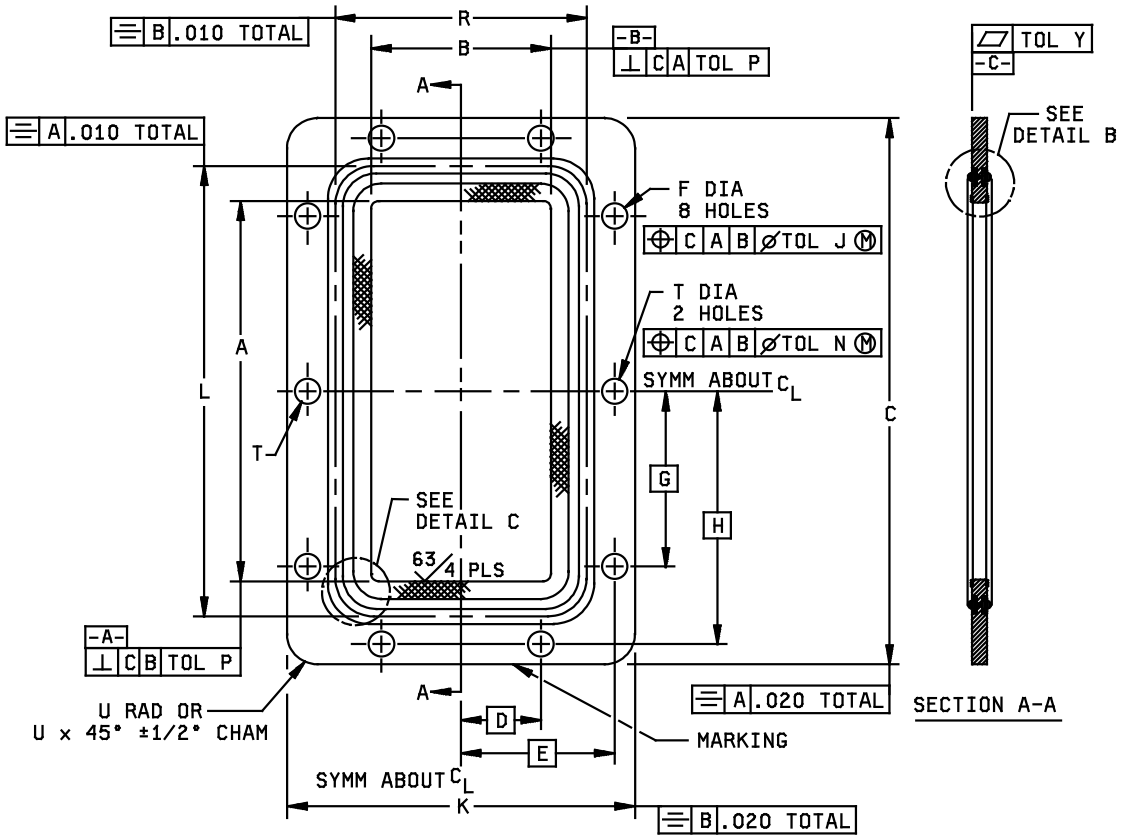

Configuration 1. Gasket configuration for part numbers 001-011.

FIGURE 1. Gasket.

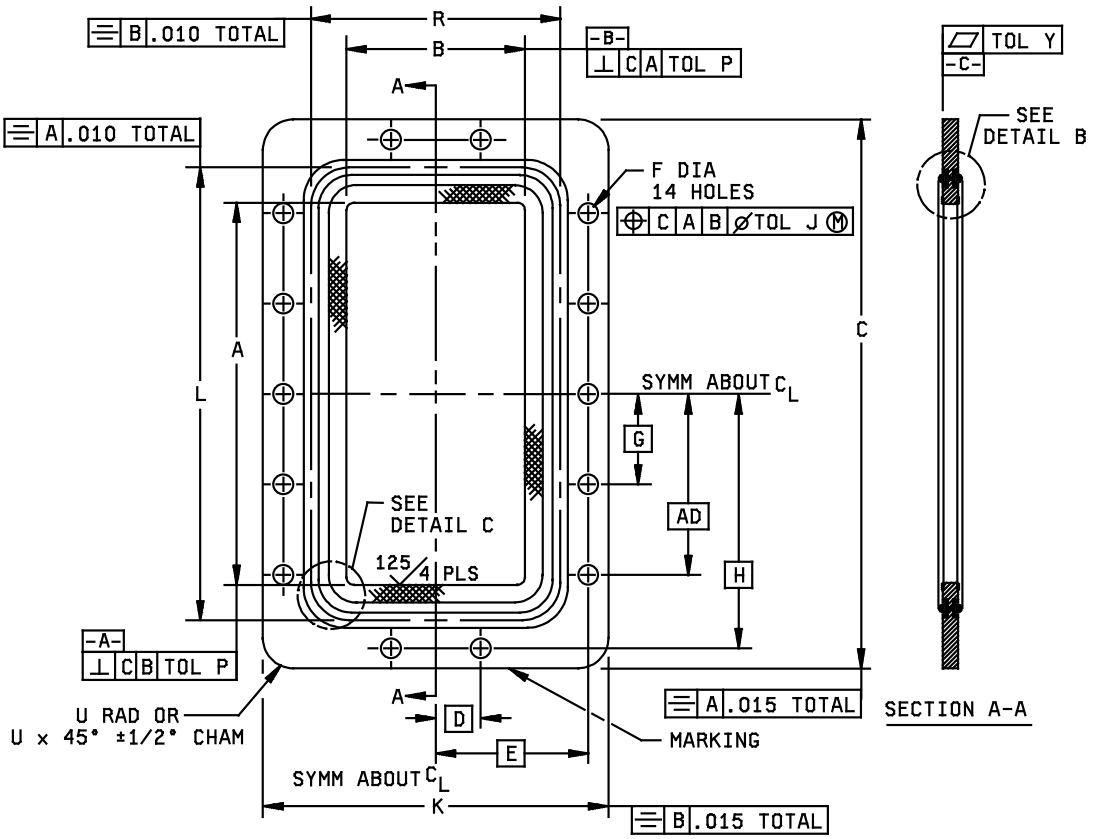

Configuration 2. Gasket configuration for part number 012.

FIGURE 1. Gasket - Continued.

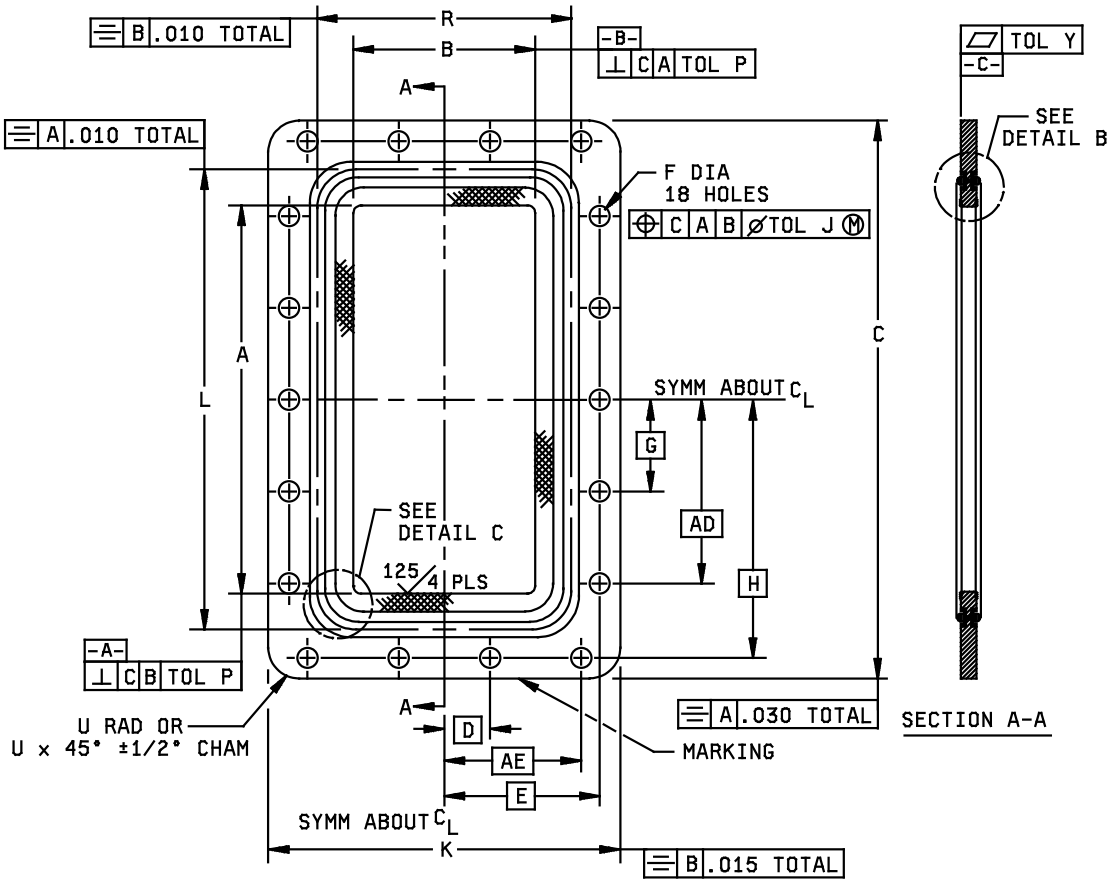

Configuration 3. Gasket configuration for part number 013.

FIGURE 1. Gasket - Continued.

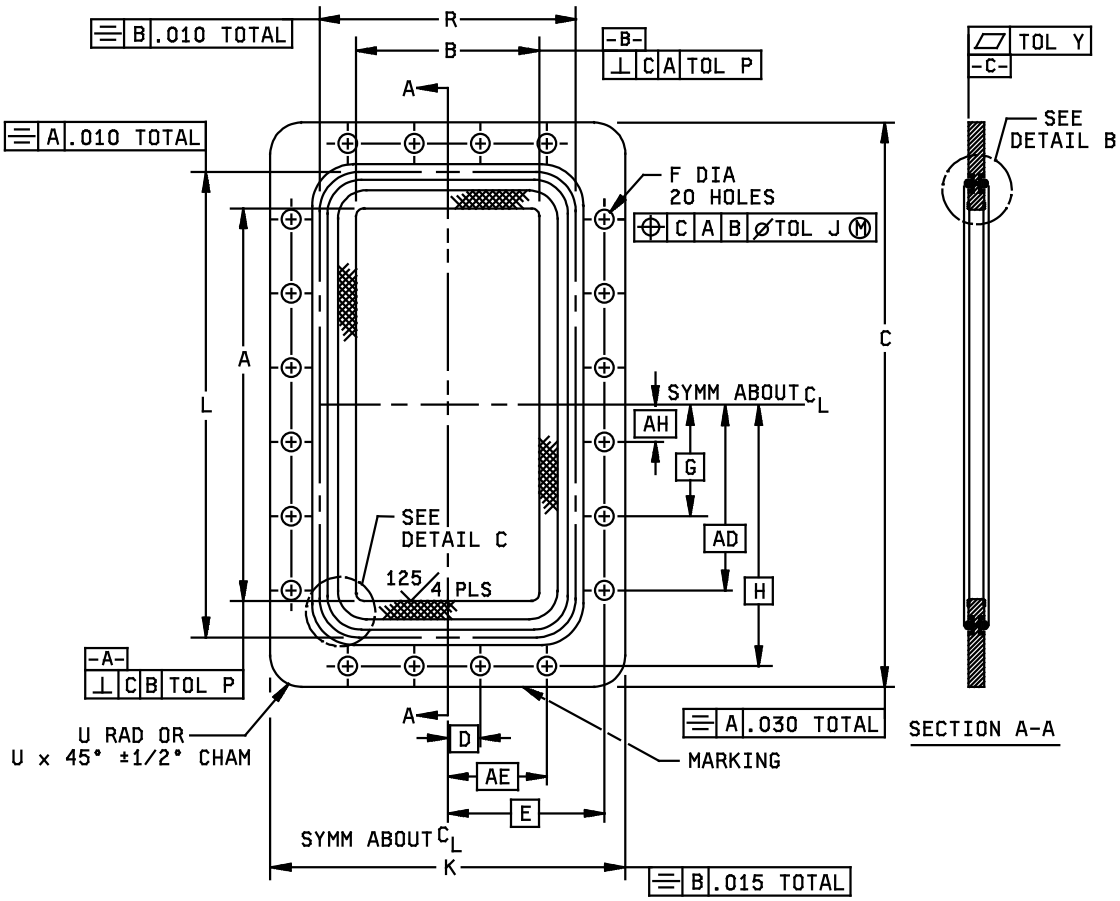

Configuration 4. Gasket configuration for part number 014.

FIGURE 1. Gasket - Continued.

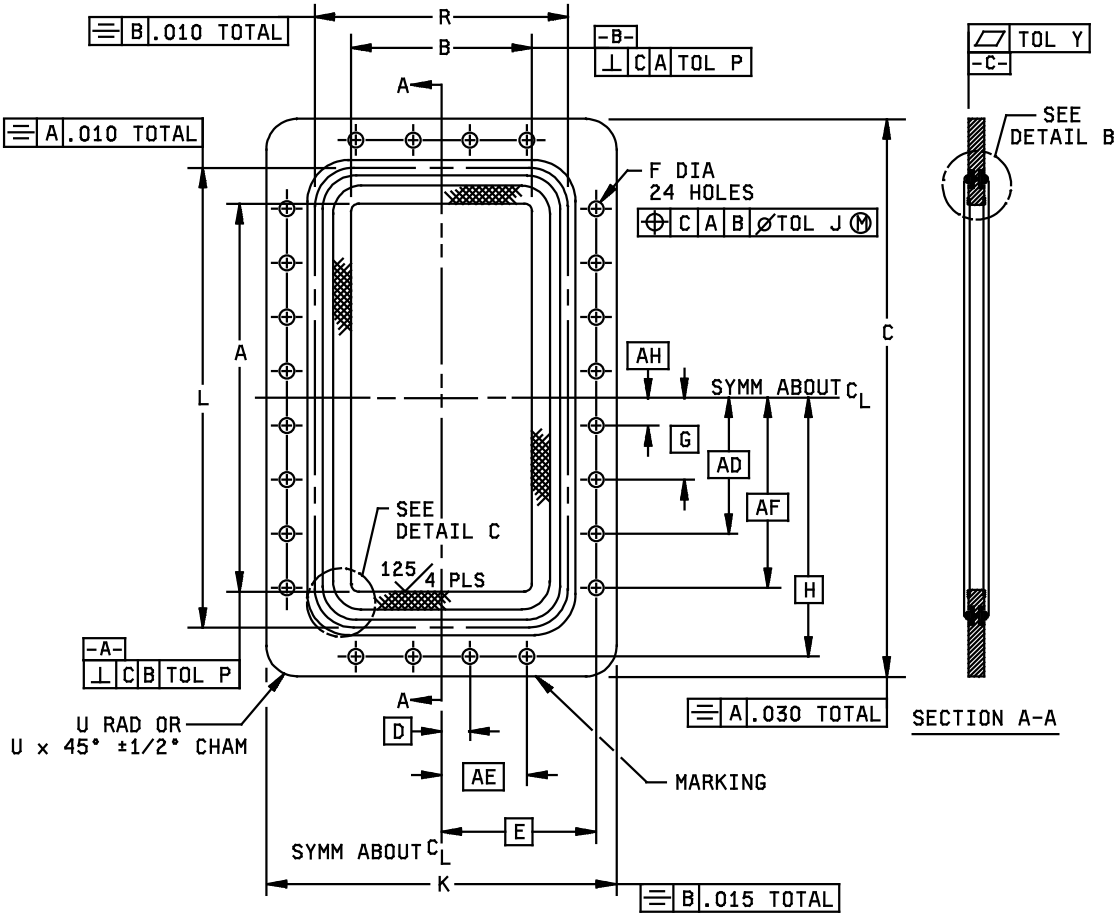

Configuration 5. Gasket configuration for part number 015.

FIGURE 1. Gasket - Continued.

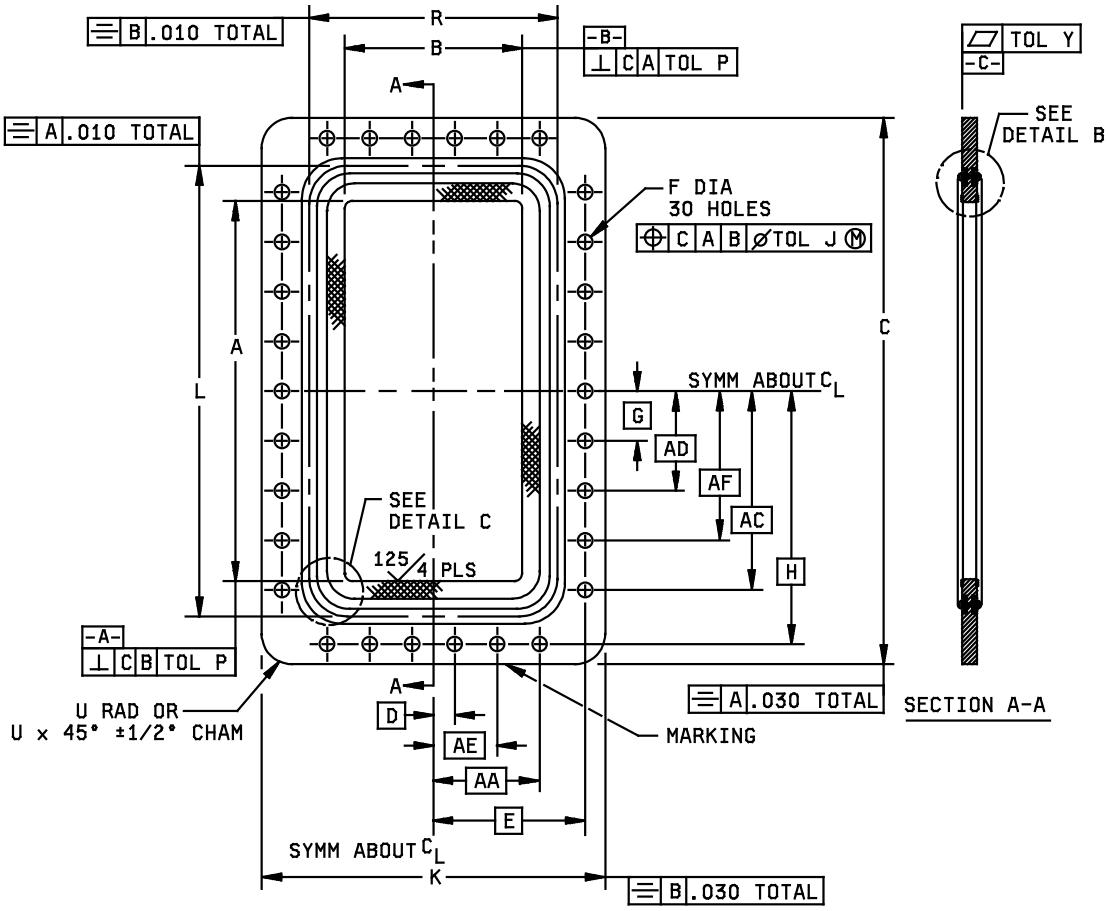

Configuration 6. Gasket configuration for part number 016.

FIGURE 1. Gasket - Continued.

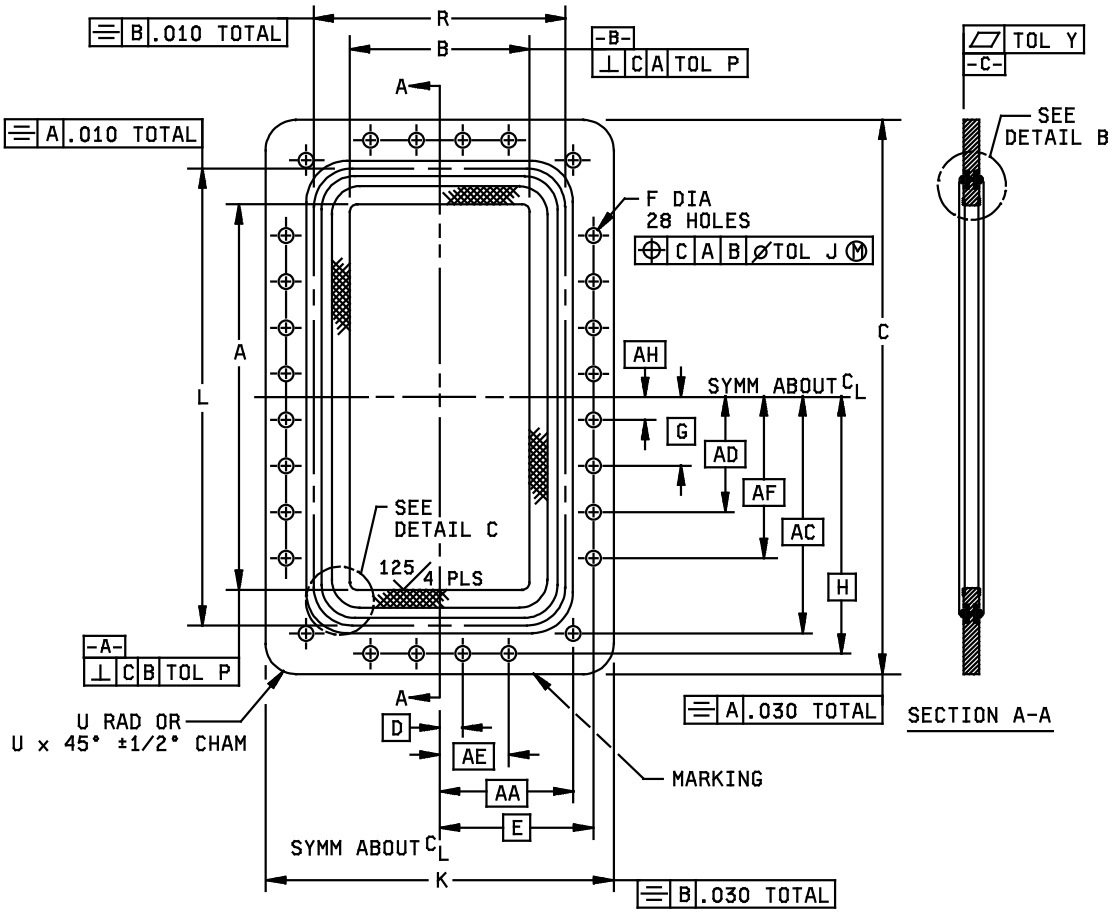

Configuration 7. Gasket configuration for part number 017.

FIGURE 1. Gasket - Continued.

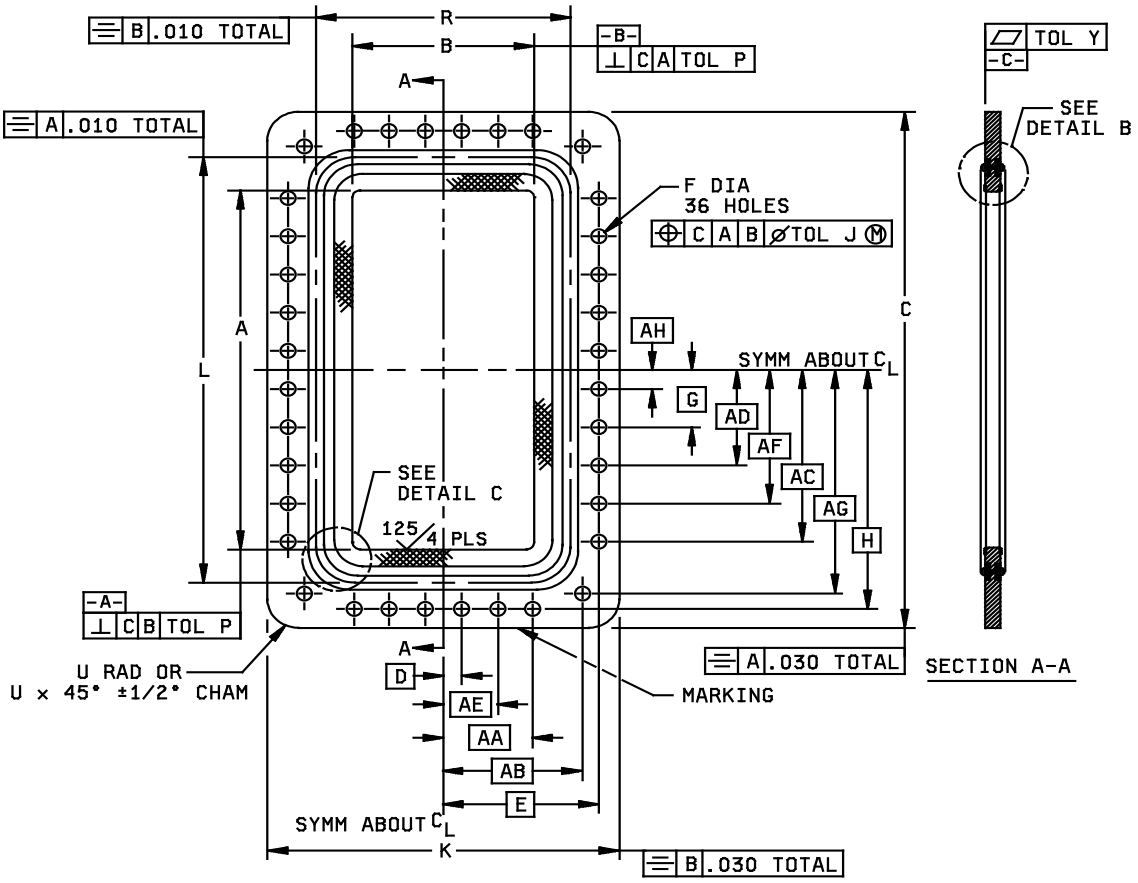

Configuration 8. Gasket configuration for part number 018.

FIGURE 1. Gasket - Continued.

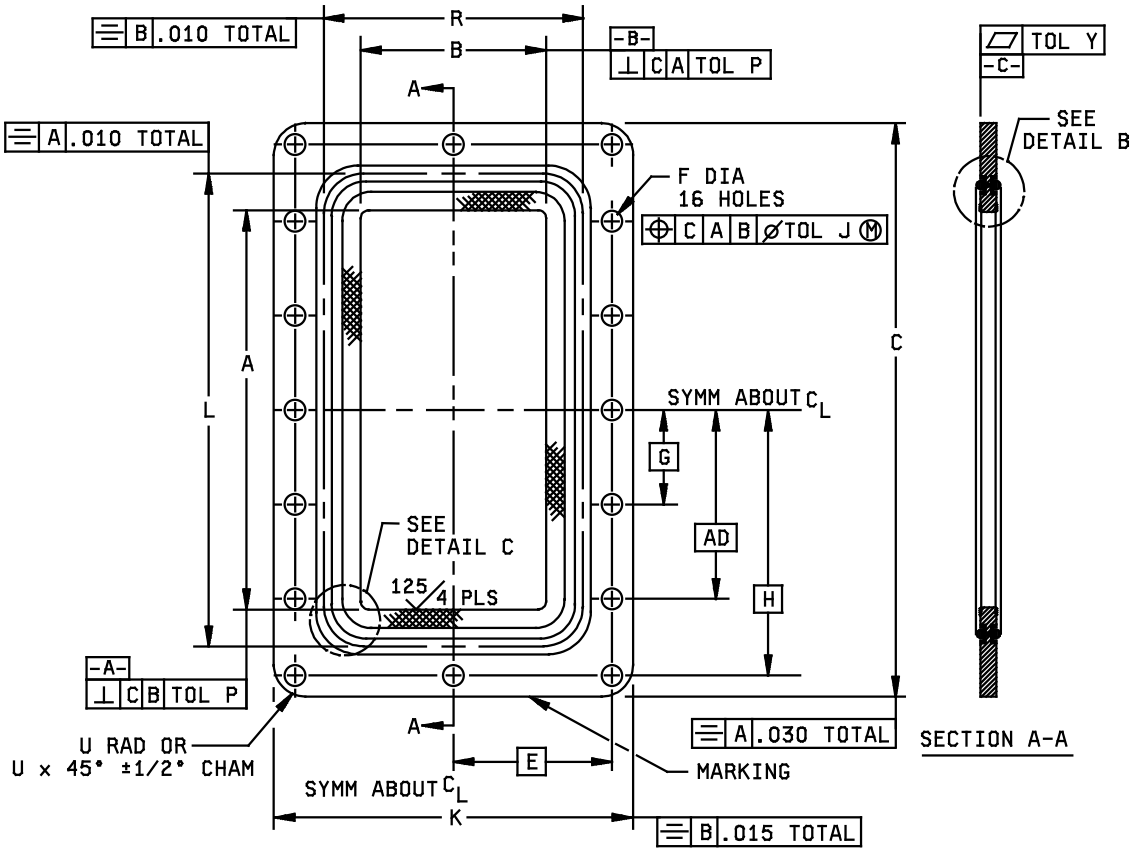

Configuration 9. Gasket configuration for part number 019.

FIGURE 1. Gasket - Continued.

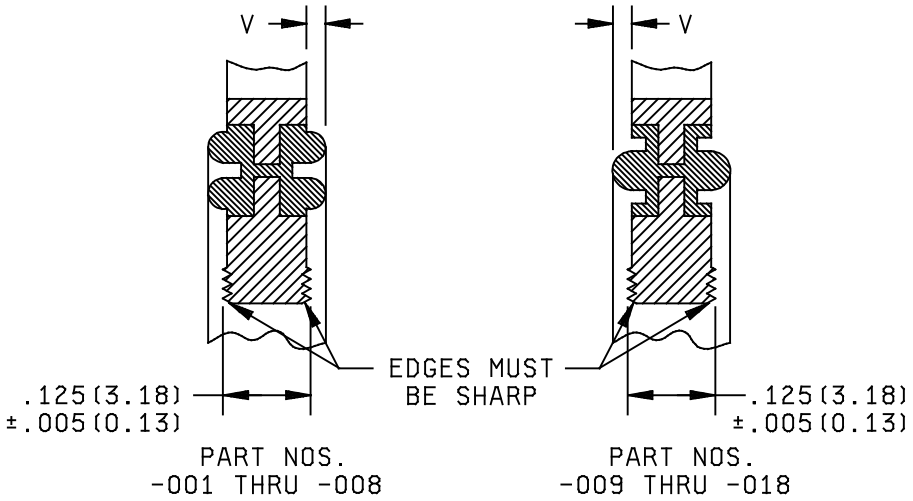

DETAIL B

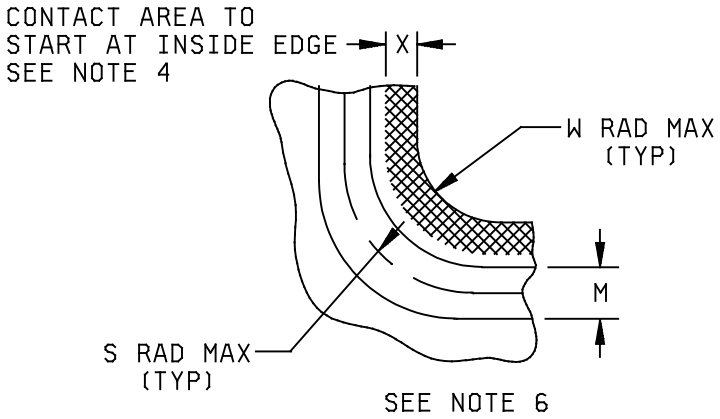

DETAIL C

FIGURE 1. Gasket - Continued.

Part number M24211/2-	A	B	C	D BSC.	E BSC.	F	G BSC.
001	6.500 ± .005 (165.10 ± .13)	3.250 ± .005 (82.55 ± .13)	8.690 ± .020 (220.73 ± .51)	1.249 (31.72)	2.311 (58.70)	.330 ± .005 (8.38 ± .13)	2.374 (60.30)
002	5.100 ± .005 (129.54 ± .13)	2.550 ± .005 (64.77 ± .13)	7.160 ± .020 (181.86 ± .51)	1.031 (26.19)	1.925 (48.90)	.266 ± .005 (6.76 ± .13)	1.987 (50.47)
003	4.300 ± .005 (109.22 ± .13)	2.150 ± .005 (54.61 ± .13)	6.340 ± .020 (161.04 ± .51)	.938 (23.83)	1.720 (43.69)	.266 ± .005 (6.76 ± .13)	1.787 (45.39)
004	3.400 ± .005 (86.36 ± .13)	1.700 ± .005 (43.18 ± . 13)	5.440 ± .020 (138.18 ± .51)	.671 (17.04)	1.500 (38.10)	.266 ± .005 (6.76 ± .13)	1.344 (34.14)
005	2.840 ± .005 (72.14 ± .13)	1.340 ± .005 (34.04 ± .13)	4.500 ± .020 (114.30 ± .51)	.578 (14.68)	1.164 (29.57)	.257 + .005 (6.53 + .13) - .000	1.281 (32.54)
006	2.290 ± .005 (58.17 ± .13)	1.145 ± .005 (29.08 ± .13)	3.880 ± .020 (98.55 ± .51)	.500 (12.70)	1.050 (26.67)	.257 + .005 (6.53 + .13) - .000	1.070 (27.18)
007	1.872 ± .005 (47.55 ± .13)	.872 ± .005 (22.15 ± .13)	3.500 ± .020 (88.90 ± .51)	.438 (11.13)	.914 (23.22)	.257 + .005 (6.53 + .13) - .000	.562 (14.27)
008	1.590 ± .004 (40.39 ± .10)	.795 ± .004 (20.19 ± .10)	3.190 ± .020 (81.03 ± .51)	.375 (9.53)	.875 (22.23)	.257 + .005 (6.53 + .13) - .000	.500 (12.70)
009	1.372 ± .004 (34.85 ± .10)	.622 ± .004 (15.80 ± .10)	2.690 ± .020 (68.33 ± .51)	.313 (7.95)	.719 (18.26)	.196 + .004 (4.98 + .10) - .000	.438 (11.13)
010	1.122 ± .004 (28.50 ± .10)	.497 ± .004 (12.62 ± .10)	2.500 ± .020 (63.50 ± .51)	.312 (7.92)	.640 (16.26)	.169 + .002 (4.29 + .05) - .000	.375 (9.53)
011	.900 ± .003 (22.86 ± .08)	.400 ± .003 (10.16 ± .08)	2.090 ± .020 (53.09 ± .51)	.312 (7.92)	.578 (14.68)	.169 + .002 (4.29 + .05) - .000	.312 (7.92)
012	7.700 ± .006 (195.58 ± .15)	3.850 ± .006 (97.79 ± .15)	11.219± .015 (284.96 ± .38)	1.000 (25.40)	2.925 (74.30)	.406 + .010 (10.31 + .25) - .000	2.000 (50.80)
013	9.750 ± .006 (247.65 ± .15)	4.875 ± .006 (123.82± .15)	13.250 ± .015 (336.55 ± .38)	1.000 (25.40)	3.437 (87.30)	.406 + .010 (10.31 + .25) - .000	2.000 (50.80)
014	11.500 ± .007 (292.10 ± .18)	5.750 ± .007 (146.05± .18)	15.000 ± .030 (381.00 ± .76)	0.969 (24.6)	3.875 (98.42)	.406 + .010 (10.31 + .25) - .000	3.000 (76.20)
015	15.000 ± .007 (381.00 ± .18)	7.500 ± .007 (190.50± .18)	18.500 ± .030 (469.90 ± .76)	1.000 (25.40)	4.750 (120.6)	.406 + .010 (10.31 + .25) - .000	3.000 (76.20)
016	18.000 ± .008 (457.20 ± .20)	9.000 ± .008 (228.60± .20)	21.500 ± .030 (546.10 ± .76)	0.907 (23.0)	5.500 (139.7)	.406 + .010 (10.31 + .25) - .000	2.000 (50.80)
017	21.000 ± .010 (533.40± .25)	10.500 ± .010 (266.70± .25)	24.625 ± .030 (625.48 ± .76)	1.300 (33.02)	6.500 (165.1)	.531 + .010 (13.49 + .25) - .000	3.917 (99.49)
018	23.000 ± .010 (584.20 ± .25)	11.500 ± .010 (292.10± .25)	26.625 ± .030 (676.28 ± .76)	0.930 (23.6)	7.000 (177.8)	.531 + .010 (13.49 + .25) - .000	3.345 (84.96)
019	9.750 ± .005 (247.65 ± .13)	2.436 ± .005 (61.87 ± .13)	13.250 ± .015 (336.55 ± .38)	---	1.500 (38.10)	.406 + .010 (10.31 + .25) - .000	2.000 (50.80)

FIGURE 1. Gasket - Continued.

Part number M24211/2-	H	J	K	L ± .010 (.25)	M ± .010 (.25)	N	P	R ± .010 (.25)
001	3.937 (100.00)	.012 (.30)	5.440 ± .020 (138.18 ± .51)	7.188 (182.58)	.188 (4.78)	.012 (.30)	.005 (.13)	3.938 (100.03)
002	3.200 (81.28)	.011 (.28)	4.620 ± .020 (117.35 ± .51)	5.844 (148.44)	.188 (4.78)	.011 (.28)	.005 (.13)	3.281 (83.34)
003	2.795 (70.99)	.011 (.28)	4.190 ± .020 (106.43 ± .51)	4.884 (124.05)	.172 (4.37)	.011 (.28)	.005 (.13)	2.728 (69.29)
004	2.344 (59.54)	.011 (.28)	3.750 ± .020 (95.25 ± .51)	3.984 (101.19)	.172 (4.37)	.011 (.28)	.005 (.13)	2.284 (58.01)
005	1.914 (48.62)	.007 (.18)	3.000 ± .020 (76.20 ± .51)	3.338 (84.79)	.156 (3.96)	.004 (.10)	.005 (.13)	1.838 (46.69)
006	1.620 (41.15)	.007 (.18)	2.750 ± .020 (69.85 ± .51)	2.750 (69.85)	.156 (3.96)	.005 (.13)	.005 (.13)	1.605 (40.77)
007	1.414 (35.92)	.007 (.18)	2.500 ± .020 (63.50 ± .51)	2.330 (59.18)	.156 (3.96)	---	.005 (.13)	1.330 (33.78)
008	1.273 (32.33)	.007 (.18)	2.440 ± .020 (61.98 ± .51)	2.050 (52.07)	.156 (3.96)	---	.004 (.10)	1.255 (31.88)
009	1.094 (27.79)	.006 (.15)	1.940 ± .020 (49.28 ± .51)	1.782 (45.26)	.110 (2.79)	---	.004 (.10)	1.032 (26.21)
010	.953 (24.21)	.005 (.13)	1.750 ± .020 (44.45 ± .51)	1.532 (38.91)	.110 (2.79)	---	.004 (.10)	.907 (23.04)
011	.828 (21.03)	.005 (.13)	1.590 ± .020 (40.39 ± .51)	1.300 (33.02)	.110 (2.79)	---	.003 (.08)	.800 (20.32)
012	4.850 (123.2)	.030 (.76)	7.375 ± .015 (187.32 ± .38)	8.530 (216.66)	.188 (4.78)	---	.006 (.15)	4.680 (118.87)
013	5.875 (149.2)	.030 (.76)	8.375 ± .015 (212.72 ± .38)	10.532 (267.51)	.203 (5.16)	---	.006 (.15)	5.657 (143.69)
014	6.750 (171.4)	.030 (.76)	9.250 ± .015 (234.95 ± .38)	12.600 (320.04)	.234 (5.94)	---	.007 (.18)	6.850 (173.99)
015	8.500 (215.9)	.030 (.76)	11.000 ± .015 (279.40 ± .38)	16.064 (408.03)	.234 (5.94)	---	.007 (.18)	8.564 (217.53)
016	10.000 (250.0)	.030 (.76)	12.500 ± .030 (317.50 ± .76)	19.064 (484.23)	.234 (5.94)	---	.008 (.20)	10.064 (255.63)
017	11.750 (298.45)	.030 (.76)	14.125 ± .030 (358.78 ± .76)	21.970 (558.04)	.212 (5.38)	---	.010 (.25)	11.470 (291.34)
018	12.750 (323.85)	.030 (.76)	15.125 ± .030 (384.18 ± .76)	23.850 (605.79)	.234 (5.94)	---	.010 (.25)	12.350 (313.69)
019	5.875 (149.2)	.030 (.76)	4.500 ± .015 (114.30 ± .38)	10.450 (265.43)	.140 (3.56)	---	.005 (.13)	3.237 ± .005 (82.22 ± 0.13)

FIGURE 1. Gasket - Continued.

Part number M24211/2-	S ± .010 (.25)	T	U	V ± .005 (.13)	W	X ± .02 (.51)	Y
001	.375 (9.52)	.330 ± .005 (8.38 ± .13)	.25 (6.35)	.020 (.51)	.050 (1.27)	.19 (4.83)	.005 (.13)
002	.250 (6.35)	.266 ± .005 (6.76 ± .13)	.25 (6.35)	.020 (.51)	.050 (1.27)	.16 (4.06)	.005 (.13)
003	.250 (6.35)	.266 ± .005 (6.76 ± .13)	.25 (6.35)	.020 (.51)	.050 (1.27)	.16 (4.06)	.005 (.13)
004	.367 (9.32)	.266 ± .005 (6.76 ± .13)	.25 (6.35)	.020 (.51)	.050 (1.27)	.16 (4.06)	.005 (.13)
005	.280 (7.11)	.257 ± .003 (6.53 ± .08)	.31 (7.87)	.020 (.51)	.050 (1.27)	.09 (4.83)	.005 (.13)
006	.140 (3.56)	.257 ± .002 (6.53 ± .05)	.31 (7.87)	.020 (.51)	.050 (1.27)	.09 (4.83)	.005 (.13)
007	.260 (6.60)	---	.31 (7.87)	.020 (.51)	.030 (.76)	.09 (4.83)	.005 (.13)
008	.140 (3.56)	---	.31 (7.87)	.020 (.51)	.030 (.76)	.09 (4.83)	.004 (.10)
009	.236 (5.99)	---	.25 (6.35)	.026 (.66)	.030 (.76)	.09 (4.83)	.004 (.10)
010	.236 (5.99)	---	.25 (6.35)	.026 (.66)	.030 (.76)	.09 (4.83)	.004 (.10)
011	.231 (5.87)	---	.25 (6.35)	.026 (.66)	.030 (.76)	.09 (4.83)	.003 (.08)
012	.540 (13.72)	---	.25 (6.35)	.020 (.51)	.050 (1.27)	.22 (5.59)	.005 (.13)
013	.516 (13.11)	---	.25 (6.35)	.020 (.51)	.050 (1.27)	.22 (5.59)	.005 (.13)
014	.500 (12.70)	---	.25 (6.35)	.020 (.51)	.050 (1.27)	.22 (5.59)	.005 (.13)
015	.657 (16.69)	---	.25 (6.35)	.020 (.51)	.050 (1.27)	.22 (5.59)	.005 (.13)
016	.657 (16.69)	---	.25 (6.35)	.020 (.51)	.050 (1.27)	.22 (5.59)	.005 (.13)
017	.563 (14.30)	---	.25 (6.35)	.020 (.51)	.050 (1.27)	.22 (5.59)	.005 (.13)
018	.551 (14.00)	---	.25 (6.35)	.020 (.51)	.050 (1.27)	.22 (5.59)	.005 (.13)
019	.200 (5.08)	---	.25 (6.35)	.026 (.66)	.031 (.79)	.16 (4.06)	.005 (.13)

FIGURE 1. Gasket - Continued.

Part number M24211/2-	AA	AB	AC	AD	AE	AF	AG	AH
012	---	---	---	4.000 (101.6)	---	---	---	---
013	---	---	---	4.000 (101.6)	3.000 (76.20)	---	---	---
014	---	---	---	5.000 (127.0)	2.907 (73.84)	---	---	1.000 (25.40)
015	---	---	---	5.000 (127.0)	3.000 (76.20)	7.000 (177.8)	---	1.000 (25.40)
016	4.532 (115.1)	---	8.000 (203.2)	4.000 (101.6)	2.719 (69.06)	6.000 (152.4)	---	---
017	6.061 (153.9)	---	11.311 (287.30)	6.528 (165.8)	3.900 (99.06)	9.139 (232.1)	---	1.306 (33.17)
018	4.651 (118.1)	6.511 (165.4)	10.032 (254.8)	5.574 (141.6)	2.790 (70.87)	7.803 (198.2)	12.261 (311.4)	1.116 (28.35)
019	---	---	---	4.000 (101.6)	---	---	---	---

INCHES	MM	INCHES	MM	INCHES	MM	INCHES	MM	INCHES	MM
0.010	.25	1.306	33.17	3.900	99.06	5.875	149.22	8.000	203.20
0.015	.38	2.000	50.80	3.917	99.49	6.000	152.40	8.500	215.90
0.020	.51	2.719	69.06	4.000	101.60	6.061	153.95	9.139	232.13
0.030	.76	2.790	70.87	4.532	115.11	6.500	165.10	10.000	254.00
0.907	23.04	2.907	73.84	4.651	118.14	6.511	165.38	10.032	254.81
0.930	23.62	2.925	74.30	4.750	120.65	6.528	165.81	11.311	287.30
0.969	24.61	3.000	76.20	4.850	123.19	6.750	171.45	11.750	298.45
1.000	25.40	3.345	84.96	5.000	127.00	7.000	177.80	12.261	311.43
1.116	28.35	3.437	87.30	5.500	139.70	7.803	198.20	12.750	323.85
1.300	33.02	3.875	98.43	5.574	141.58				

NOTES:

1. Dimensions are in inches.
2. Metric equivalents are in parentheses.
3. Metric equivalents are given for general information only and are based upon 1.00 inch = 25.4 mm.
4. Electrical contact area to be .004 (.10 mm) ± .001 (.03 mm) higher than adjacent metal surface.
5. Roughness of mating surfaces other than the raised electrical contact area shall not exceed 63 microinches in accordance with ASME-B46.1 except that flaws shall be included in the roughness height measurement.
6. Any raised embossed pattern for electrical contact is acceptable provided R.F. leakage requirement is met.

Referenced documents. In addition to MIL-DTL-24211, this document references the following:
ASME-B46.1

Marginal notations are not used in this revision to identify changes with respect to the previous issue due to the extent of the changes.

Custodians:
Army - CR
Navy - EC
Air Force - 85

Preparing activity:
DLA - CC

(Project 5985-2013-048)

Review activities:
Army - AR
Navy - AS, CG, MC, OS, SH
Air Force - 19

NOTE: The activities listed above were interested in this document as of the date of this document. Since organizations and responsibilities can change, you should verify the currency of the information above using the ASSIST Online database at https://assist.dla.mil/.