INCH-POUND
MIL-DTL-24211/1D
6 November 2013
SUPERSEDING
MIL-DTL-24211/1C
20 March 2009

DETAIL SPECIFICATION SHEET

GASKETS, WAVEGUIDE FLANGE (COVER)

This specification is approved for use by all Departments and Agencies of the Department of Defense.

The requirements for acquiring the gaskets described herein shall consist of this specification sheet and MIL-DTL-24211.

REQUIREMENTS:

Dimensions and configuration: See figure 1.

Reference data: See table I.

Part number: Consists of the basic number of this specification sheet and a dash number from table I.

Example:

M24211/1	-001
Basic document number	Dash number from table I

TABLE I. Reference data.

Part number M24211/1-	Used with flanges 1/	Part number M24211/1-	Used with flanges 1/
001	UG-51/U and UG-138/U	004	UG-1530/U
002	UG-39/U and UG-135/U	005	UG-595/U and UG-597/U
003	UG-419/U and UG-1665/U	006	UG-599/U

1/ Flanges are in accordance with MIL-DTL-3922.

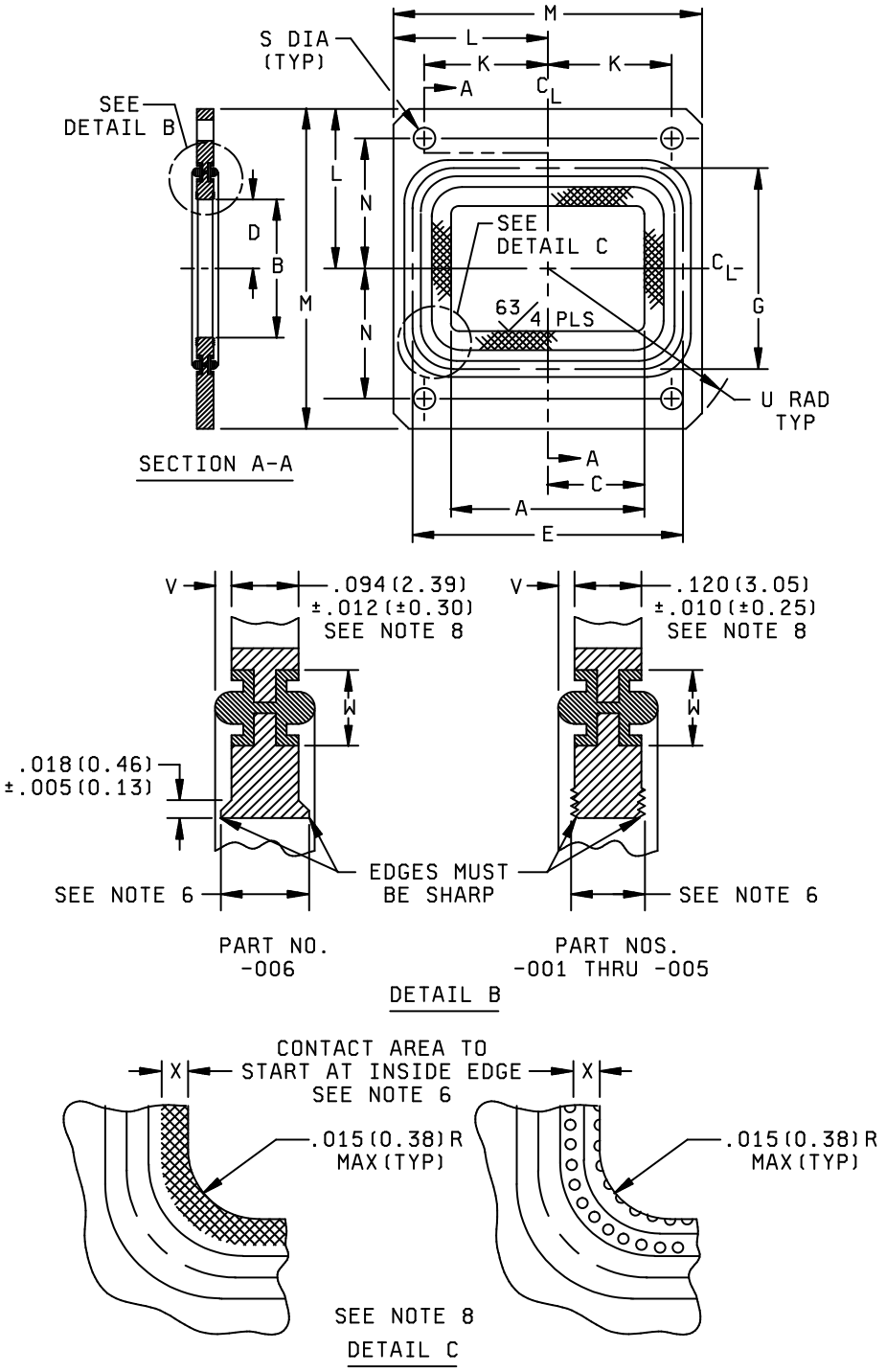

FIGURE 1. Dimensions and configuration.

Part number M24211/1-	A	B	C	D	E ± .01 (.25)	G ± .01 (.25)
001	1.122 ± .004 (28.50 ± .10)	.497 ± .004 (12.62 ± .10)	.561 ± .002 (14.25 ± .05)	.2485 ± .0020 (6.31 ± .05)	1.532 (38.91)	.907 (23.04)
002	.900 ± .003 (22.86 ± .08)	.400 ± .003 (10.16 ± .08)	.4500 ± .0015 (11.43 ± .04)	.2000 ± .0015 (5.08 ± .04)	1.300 (33.02)	.800 (20.32)
003	.622 ± .002 (15.80 ± .05)	.311 ± .002 (7.90 ± .05)	.311 ± .001 (7.90 ± .03)	.1555 ± .0010 (3.95 ± .03)	1.006 (25.55)	.695 (17.65)
004	.340 ± .002 (8.64 ± .05)	.170 ± .002 (4.32 ± .05)	.170 ± .001 (4.32 ± .03)	.085 ± .001 (2.16 ±.03)	.580 (14.73)	.410 (10.41)
005	.420 ± .002 (10.67 ± .05)	.170 ± .002 (4.32 ± .05)	.210 ±.001 (5.33 ± .03)	.085 ± .001 (2.16 ± .03)	.660 (16.76)	.410 (10.41)
006	.2800 ± .0015 (7.11 ± .04)	.1400 ± .0015 (3.56 ± .04)	.1400 ± .0008 (3.56 ± .02)	.0700 ± .0008 (1.78 ± .02)	.474 (12.04)	.334 (8.48)

Part number M24211/1-	K	L ± .01 (.25)	M ± .02 (.51)	N	S ± .003 (.08)	U ± .02 (.51)	V ±. .005 (.13)	W ± .005 (.13)	X Min
001	.676 ± .002 (17.17 ± .05)	.94 (23.88)	1.88 (47.75)	.737 ± .002 (18.72 ± .05)	.169 (4.29)	1.25 (31.75)	.026 (.66)	.110 (2.79)	.064 (1.63)
002	.610 ± .002 (15.49 ± .05)	.82 (20.83)	1.63 (41.40)	.640 ± .002 (16.26 ± .05)	.169 (4.29)	1.06 (26.92)	.026 (.66)	.110 (2.79)	.050 (1.27)
003	.497 ± .002 (12.62 ± .05)	.66 (16.76)	1.31 (33.27)	.478 ± .002 (12.14 ± .05)	.144 (3.66)	.88 (22.35)	.026 (.66)	.110 (2.79)	.040 (1.02)
004	.320 ± .001 (8.13 ± .03)	.44 (11.18)	.88 (22.35)	.335 ± .001 (8.51 ± .03)	.116 (2.95)	.57 (14.48)	.020 (.51)	.100 (2.54)	.040 (1.02)
005	.320 ± .001 (8.13 ± .03)	.44 (11.18)	.88 (22.35)	.335 ± .001 (8.51 ± .03)	.116 (2.95)	.57 (14.48)	.020 (.51)	.100 (2.54)	.040 (1.02)
006	.250 ± .001 (6.35 ± .03)	.38 (9.65)	.75 (19.05)	.265 ± .001 (6.73 ± .03)	.116 (2.95)	.47 (11.94)	.015 (.38)	.080 (2.03)	.040 (1.02)

NOTES:
1. Dimensions are in inches.
2. Millimeters are in parentheses.
3. Metric equivalents (to the nearest 0.01 mm) are given for general information only and are based upon 1 inch = 25.4 mm.
4. Except where noted, break sharp edges and remove burrs.
5. Flange is symmetrical about both centerlines.
6. Electrical contact area to be at least 0.003 (0.08) higher than adjacent metal surface.
7. Surface roughness of mating surfaces other than the raised electrical contact area shall be no greater than 63 micro inches in accordance with ASME-B46.1.
8. Any raised embossed pattern for electrical contact is acceptable provided R.F. leakage requirement is met.

FIGURE 1. Dimensions and configuration. Continued

Referenced documents. In addition to MIL-DTL-24211, this document references the following:
MIL-DTL-3922
ASME-B46.1

Marginal notations are not used in this revision to identify changes with respect to the previous issue due to the extent of the changes.

Custodians:
Army - CR
Navy - EC
Air Force - 85

Preparing activity:
DLA - CC

(Project 5985-2013-047)

Review activities:
Army - MI, AR
Navy - OS, CG, SH
Air Force - 19

NOTE: The activities listed above were interested in this document as of the date of this document. Since organizations and responsibilities can change, you should verify the currency of the information above using the ASSIST Online database at https://assist.dla.mil/.