INCH-POUND

MIL-F-24044/2A
30 April 2014
SUPERSEDING
MIL-F-24044/2
18 March 1964

MILITARY SPECIFICATION SHEET

FLANGES, ROTATABLE, COAXIAL LINE, RIGID

Inactive for new design after
18 September 1998

This specification is approved for use by all Departments and Agencies of the Department of Defense.

The requirements for acquiring the waveguide assemblies described herein shall consist of this specification sheet and MIL-DTL-24044.

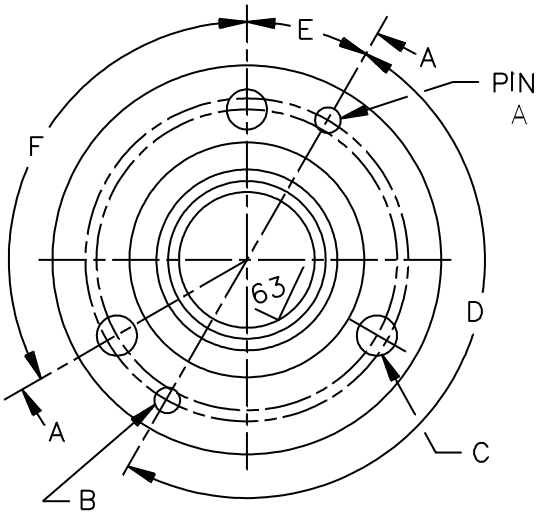

Figure 1. 7/8 flange.

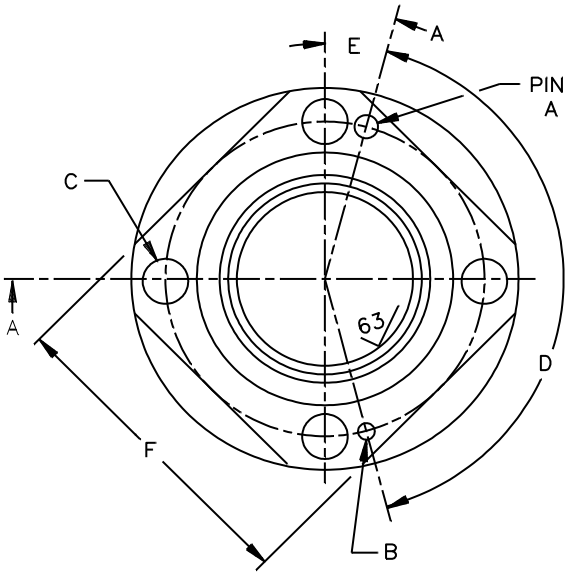

Figure 2. 1-5/8 flange.

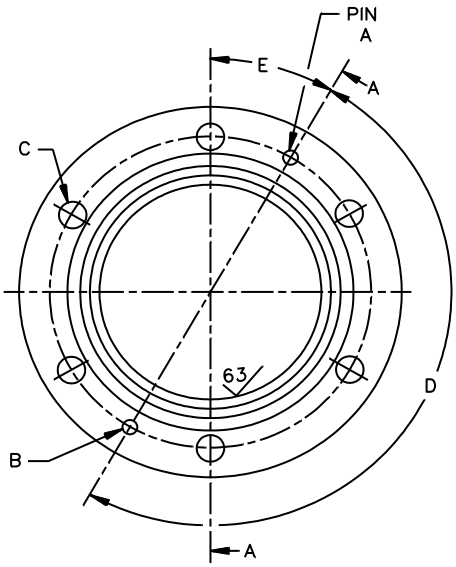

Figure 3. 3-1/8 flange.

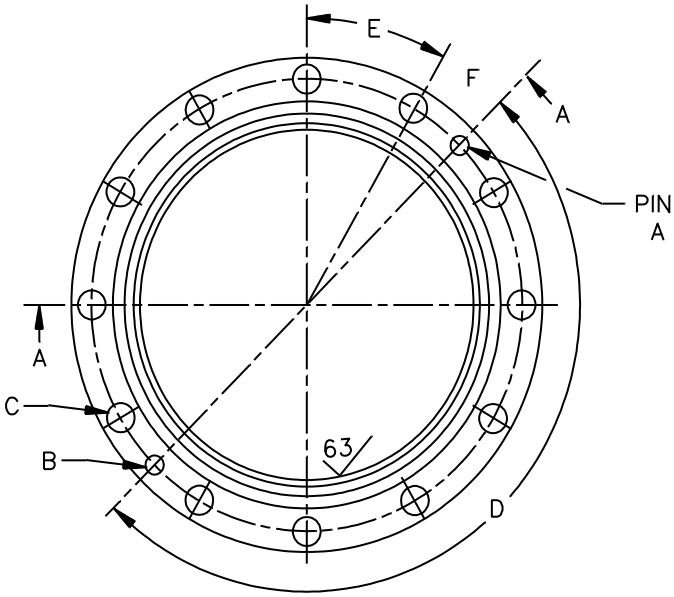

Figure 4. 6-1/8 flange.

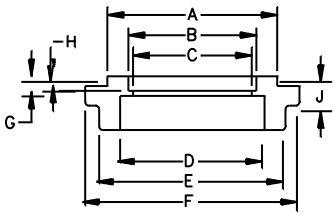

Figure 5A. Cross section A-A.

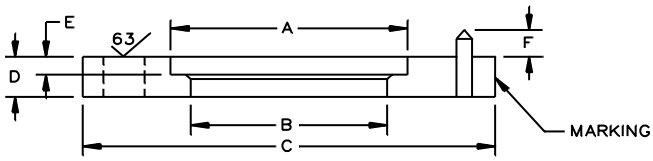

Figure 5B. Cross section A-A.

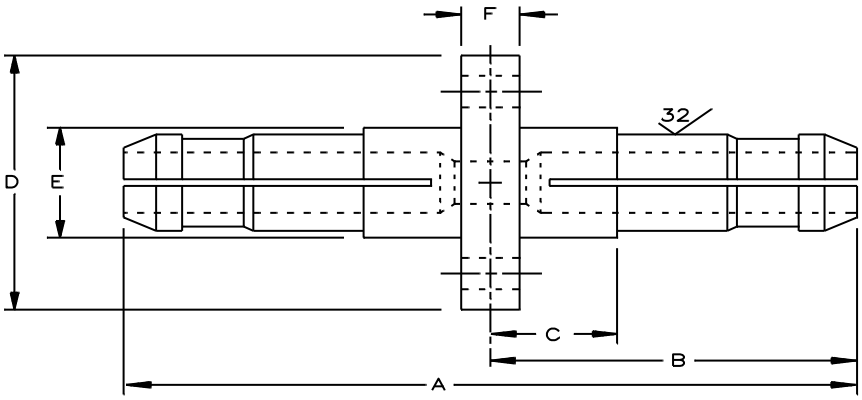

Figure 6. Inner connector.

REQUIREMENTS:

Dimensions and configuration:

See figures 1 thru 6 and table I.

Material and reference data:

See table II.

Table I. Dimensions for figures 1-4.

		Figure 1			Figure 2			Figure 3			Figure 4		
Dim		Inches	mm	Degrees and minutes	Inches	mm	Degrees and minutes	Inches	mm	Degrees and minutes	Inches	mm	Degrees and minutes
A	Min	.1218	3.09		.1218	3.09		.2465	6.26		.2465	6.26	
	Nom	.1218			.1218			.2470			.2470		
	Max	.1223	3.11		.1223	3.11		.2470	6.27		.2470	6.27	
B	Min	.129	3.28		.129	3.28		.253	6.43		.253	6.43	
	Nom	.129 1/			.129 3/			.253 6/			.253 8/		
	Max	.133	3.38		.133	3.38		.257	6.53		.257	6.53	
C	Min												
	Nom	.281 2/	7.14		.343 4/	8.71		.406 7/	10.31		.406 9/	10.31	
	Max												
D	Min			179º 53’			149º 55’			179º 57’			179º 58’
	Nom			180º			150º			180º			180º
	Max			180º 7’			150º 5’			180º 3’			180º 2’
E	Min			29º 40’			14º 48’			29º 52’			29º55’
	Nom			30º			15º			30º			30º
	Max			30º 20’			15º 12’			30º 8’			30º5’
F	Min				2.734	69.44							14º55’
	Nom			120º	2.750 5/								15º
	Max				2.766	70.26							15º5’

1/ B dia drill on 1.809-1.815 (45.95 -46.10) circle.
2/ C dia drill- 3 holes equally spaced (120º apart ± 15’ not cumulative) on 1.747-1.753 (44.37-44.53) circle.
3/ B dia drill on 2.809-2.815 (71.35-71.50) circle.
4/ C dia drill – 4 holes equally spaced (90º apart ± 15’ not cumulative) on 2.809-2.815 (71.35-71.50) circle.
5/ Square flange optional.
6/ B dia drill on 4.372-4.378 (111.05-111.20) circle.
7/ C dia drill -6 holes equally spaced (60º apart ± 15’ not cumulative) on 4.370-4.380 (111.00 -111.25) circle.
8/ B dia drill on 7.372-7.378 (187.25-187.40) circle.
9/ C dia drill - 12 holes equally spaced (30º apart ± 5’ not cumulative) on 7.370-7.380 (187.20-187.45) circle.

Metric equivalents tabulated and in parentheses are for general information only and are based upon 1 inch = 25.4 mm.

TABLE I. Figure 5A dimensions (Continued).

		M-24044/2-1&2 7/8 50 ohm		M-24044/2- 3& 4 7/8/ 75 ohm		M-24044/2- 5& 6 1-5/8 50 ohm		M-24044/2- 7&8 1-5/8 75 ohm		M-24044/2- 9& 10 3-1/8 50 ohm		M-24044/2- 11& 12 3-1/8 75 ohm		M-24044/2- 13& 14 6-1/8 50 ohm	
Dim		Inches	mm	Inches	mm	Inches	mm	Inches	mm	Inches	mm	Inches	mm	Inches	mm
A	Min	1.025	26.04	1.025	26.04	1.815	46.10	1.815	46.10	3.320	84.33	3.320	84.33	6.215	157.86
	Nom	1.030		1.030		1.820		1.820		3.325		3.325		6.220	
	Max	1.030	26.16	1.030	26.16	1.825	46.36	1.825	46.36	3.330	84.58	3.330	84.58	6.225	158.12
B	Min	.815	20.70	.815	20.70	1.647	41.83	1.647	41.83	3.203	81.36	3.203	81.36	6.075	154.31
	Nom	.815		.815		1.647		1.647		3.203		3.203		6.075	
	Max	.820	20.83	.820	20.83	1.652	41.96	1.652	41.96	3.208	81.48	3.208	81.48	6.080	154.43
C	Min	.782	19.86	.782	19.86	1.524	38.71	1.524	38.71	3.022	76.76	3.022	76.76	5.973	151.71
	Nom	.785		.785		1.527		1.527		3.027		3.027		5.981	
	Max	.788	20.02	.788	20.02	1.530	38.86	1.530	38.86	3.032	77.01	3.032	77.01	5.989	152.12
D	Min	.878	22.30	.878	22.30	1.628	41.35	1.628	41.35	3.130	79.50	3.130	79.50	6.130	155.70
	Nom	.878		.878		1.628		1.628		3.130		3.130		6.130	
	Max	.881	22.38	.881	22.38	1.631	41.43	1.631	41.43	3.133	79.58	3.133	79.58	6.138	155.91
E	Min	1.120	28.45	1.120	28.45	1.995	50.67	1.995	50.67	3.365	85.47	3.365	85.47	6.365	161.67
	Nom	1.125		1.125		2.000		2.000		3.375		3.375		6.375	
	Max	1.125	28.58	1.125	28.58	2.000	50.80	2.000	50.80	3.375	85.73	3.375	85.73	6.375	161.93
F	Min	1.338	33.99	1.338	33.99	2.302	58.47	2.303	58.47	3.795	96.39	3.795	96.39	6.775	172.09
	Nom	1.343		1.343		2.305		2.305		3.800		3.800		6.780	
	Max	1.343	34.11	1.343	34.11	2.305	58.55	2.305	58.55	3.800	96.52	3.800	96.52	6.780	172.21
G	Min	.093	2.36	.093	2.36	.125	3.18	.125	3.18	.187	4.75	.187	4.75	.218	5.54
	Nom	.093		.093		.125		.125		.187		.187		.223	
	Max	.098	2.49	.098	2.49	.130	3.30	.130	3.30	.192	4.88	.192	4.88	.223	5.66
H	Min	.048	1.22	.048	1.22	.077	1.96	.077	1.96	.077	1.96	.077	1.96	.110	2.79
	Nom	.053		.053		.080		.080		.080		.080		.115	
	Max	.053	1.35	.053	1.35	.080	2.03	.080	2.03	.080	2.03	.080	2.03	.120	3.05
J	Min	.173	4.39	.173	4.39	.225	5.72	.225	5.72	.232	5.89	.232	5.89	.323	8.20
	Nom	.176		.176		.230		.230		.235		.235		.328	
	Max	.176	4.47	.176	4.47	.230	5.84	.230	5.84	.238	6.05	.238	6.05	.328	8.33

TABLE I. Figure 5B dimensions (Continued).

		M-24044/2-1&2 7/8 50 ohm		M-24044/2- 3& 4 7/8/ 75 ohm		M-24044/2- 5& 6 1-5/8 50 ohm		M-24044/2- 7&8 1-5/8 75 ohm		M-24044/2- 9& 10 3-1/8 50 ohm		M-24044/2- 11& 12 3-1/8 75 ohm		M-24044/2- 13& 14 6-1/8 50 ohm	
Dim		Inches	mm	Inches	mm	Inches	mm	Inches	mm	Inches	mm	Inches	mm	Inches	mm
A	Min	1.350	34.29	1.350	34.29	2.315	58.80	2.315	58.80	3.805	96.65	3.805	96.65	6.795	172.59
	Nom	1.350		1.350		2.315		2.315		3.810		3.810		6.800	
	Max	1.355	34.42	1.355	34.42	2.318	58.88	2.318	58.88	3.815	96.90	3.815	96.90	6.805	172.85
B	Min	1.140	28.96	1.140	28.96	2.020	51.31	2.020	51.31	3.400	86.36	3.400	86.36	6.400	162.56
	Nom	1.145		1.145		2.020		2.020		3.400		3.400		6.400	
	Max	1.150	29.21	1.150	29.21	2.025	51.44	2.025	51.44	3.410	86.61	3.410	86.61	6.410	162.81
C	Min	2.234	56.74	2.234	56.74	3.484	88.49	3.484	88.49	5.172	131.37	5.172	131.37	8.109	205.94
	Nom	2.250		2.250		3.500		3.500		5.188		5.188		8.125	
	Max	2.266	57.56	2.266	57.56	3.516	89.31	3.516	89.31	5.204	132.18	5.204	132.18	8.141	206.78
D	Min	.3125	7.94	.3125	7.94	.375	9.53	.375	9.53	.438	11.13	.438	11.13	.513	13.03
	Nom	.3125	7.94	.3125	7.94	.375	9.53	.375	9.53	438	11.13	.438	11.13	.513	13.03
	Max														
E	Min	.165	4.19	.165	4.19	.211	5.36	.211	5.36	.220	5.59	.220	5.59	.309	7.85
	Nom	.165		.165		.216		.216		.225		.225		.314	
	Max	.168	4.27	.168	4.27	.221	5.61	.221	5.61	.230	5.84	.230	5.84	.314	7.98
F	Min	.140	3.56	.140	3.56	.234	5.94	.234	5.94	.359	9.12	.359	9.12	.359	9.12
	Nom	.156		.156		.250		.250		.375		.375		.375	
	Max	.172	4.37	.172	4.37	.266	6.76	.266	6.76	.391	9.93	.391	9.93	.391	9.93

Metric equivalents tabulated and in parentheses are for general information only and are based upon 1 inch = 25.4 mm.

TABLE I. Figure 6 dimensions (Continued).

		M-24044/2-1&2 7/8 50 ohm		M-24044/2- 3& 4 7/8/ 75 ohm		M-24044/2- 5& 6 1-5/8 50 ohm		M-24044/2- 7&8 1-5/8 75 ohm		M-24044/2- 9& 10 3-1/8 50 ohm		M-24044/2- 11& 12 3-1/8 75 ohm		M-24044/2- 13& 14 6-1/8 50 ohm	
Dim		Inches	mm	Inches	mm	Inches	mm	Inches	mm	Inches	mm	Inches	mm	Inches	mm
A	Min														
	Nom	2.688	68.28	2.688	68.28	3.250	82.55	3.250	82.55	4.250	107.95	4.250	107.95	5.50	139.70
	Max	2.688	68.28	2.688	68.28	3.250	82.55	3.250	82.55	4.250	107.95	4.250	107.95	5.50	139.70
B	Min														
	Nom	1.344	34.14	1.344	34.14	1.625	41.28	1.625	41.28	2.125	53.98	2.125	53.98	2.750	69.85
	Max	1.344	34.14	1.344	34.14	1.625	41.28	1.625	41.28	2.125	53.98	2.125	53.98	2.750	69.85
C	Min														
	Nom	.433	11.00	.433	11.00	.573	14.55	.573	14.55	.893	22.68	.893	22.68	1.221	31.01
	Max	.433	11.00	.433	11.00	.573	14.55	.573	14.55	.893	22.68	.893	22.68	1.221	31.01
D	Min	.810	20.57	.810	20.57	1.640	41.66	1.640	41.66	3.195	81.15	3.195	81.15	6.067	154.10
	Nom	.810		.810		1.645		1.645		3.198		3.198		6.072	
	Max	.812	20.63	.812	20.63	1.645	41.78	1.645	41.78	3.198	81.23	3.198	81.23	6.072	154.23
E	Min	.339	8.61	.224	5.69	.6615	16.80	.436	11.07	1.312	33.33	.8665	22.01	2.596	65.94
	Nom	.341		.226		.6640		.438		1.315		.8690		2.600	
	Max	.343	8.71	.228	5.79	.6665	16.93	.440	11.18	1.318	33.48	.8715	22.14	2.640	66.14
F	Min	.183	4.65	.183	4.65	.244	6.20	.244	6.20	.367	9.32	.367	9.32	.429	10.90
	Nom	.185		.185		.249		.249		.372		.372		.434	
	Max	.185	4.70	.185	4.70	.249	6.33	.249	6.33	.372	9.45	.372	9.45	.434	11.02

NOTES:

1. Figure 6 for assurance of interchangeability only of inner connector.
2. All diameters to be concentric within .005 (.13) except stock size (O.D.).
3. Metric equivalent tabulated are for general information only and are based upon 1 inch =25.4 mm.

TABLE II. Requirements.

Part No.	Type	Size (in)	Nominal impedance (ohms)	Material	Figure no.	Mates with self and (MIL-DTL-24044/1)	Hi. Pot test (kv)	“o” ring data	Bolt data	Inner connector part no.	Type	Figure
M-24044/2-01	CG-3031/U	7/8	50	Copper base alloy	1 & 5	M-24044/1-01	5	O.D. 1.324 in. (33.63) I.D. 1.046 in. (26.57)	3 each 1/4-20 x 1 long Inch (min)	M-24044/1-01C	UG-1164/U	6
M-24044/2-02	CG-3009/U	7/8	50	Aluminum base alloy	1 & 5	M-24044/1-02	5			M-24044/1-01C	UG-1164/U	6
M-24044/2-03	CG-3010/U	7/8	75	Copper-base alloy	1 & 5	M-24044/1-03	5			M-24044/1-03C	CG-3036/U	6
M-24044/2-04	CG-3011/U	7/8	75	Aluminum-base alloy	1 & 5	M-24044/1-04	5			M-24044/1-03C	CG-3036/U	6
M-24044/2-05	CG-3033/U	1-5/8	50	Copper-base alloy	2 & 5	M-24044/1-05	10	O.D. 2.270 in. (57.66) I.D. 1.850 in. (46.99)	4 each 5/16-18 X 1-1/2 long Inch(min)	M-24044/1-05C	UG-1161/U	6
M-24044/2-06	CG-3015/U	1-5/8	50	Aluminum-base alloy	2 & 5	M-24044/1-06	10			M-24044/1-05C	UG-1161/U	6
M-24044/2-07	CG-3016/U	1-5/8	75	Copper-base alloy	2 & 5	M-24044/1-07	10			M-24044/1-07C	CG-3037/U	6
M-24044/2-08	CG-3017/U	1-5/8	75	Aluminum-base alloy	2 & 5	M-24044/1-08	10			M-24044/1-07C	CG-3037/U	6
M-24044/2-09	CG-3022/U	3-1/8	50	Copper-base alloy	3 & 5	M-24044/1-09	20	O.D. 3.770 in. (95.76) I.D. 3.350 in. (85.09	6 each 3/8-16 X 1-1/2 long Inch (min)	M-24044/1-09C	UG-3034/U	6
M-24044/2-10	CG-3024/U	3-1/8	50	Aluminum-base alloy	3 & 5	M-24044/1-10	20			M-24044/1-09C	UG-3034/U	6
M-24044/2-11	CG-3023/U	3-1/8	75	Copper-base alloy	3 & 5	M-24044/1-11	20			M-24044/1-11C	CG-3038/U	6
M-24044/2-12	CG-3025/U	3-1/8	75	Aluminum-base alloy	3 & 5	M-24044/1-12	20			M-24044/1-11C	CG-3038/U	6
M-24044/2-13	CG-3028/U	6-1/8	50	Copper-base alloy	4 & 5	M-24044/1-13	35	O.D. 6.775 in. (172.09) I.D. in. (158.12	12 each 3/8 -16 X 1-3/4 long Inch (min)	M-24044/1-13C	CG-3035/U	6
M-24044/2-14	CG-3029/U	6-1/8	50	Aluminum-base alloy	4 & 5	M-24044/1-14	35			M-24044/1-13C	CG-3035/U	6

1. Flange size is defined by the nominal outside diameter of the line with which it is used.
2. “C” on part number denotes inner connector used with flange.
3. Metric equivalent tabulated are for general information only and are based upon 1 inch =25.4 mm.

Referenced documents. In addition to MIL-DTL-24044, this document references the following:
MIL-DTL-24044/1

The margins of this specification sheet are marked with vertical lines to indicate where modifications from this revision were made. This was done as a convenience only and the Government assumes no liability whatsoever for any inaccuracies in these notations. Bidders and contractors are cautioned to evaluate the requirements of this document based on the entire content irrespective of the marginal notations.

Custodians:
Army - CR
Navy - EC
Air Force - 85
DLA - CC

Review activities:
Army - MI
Navy - AS, MC
Air Force - 99

Preparing activity:
DLA - CC

(Project 5985-2014-021)

NOTE: The activities listed above were interested in this document as of the date of this document. Since organizations and responsibilities can change, you should verify the currency of the information above using the ASSIST Online database at https://assist.dla.mil/.