INCH-POUND

MIL-DTL-23971/2D
14 January 2014
SUPERSEDING
MIL-DTL-23971/2C
20 November 2008

DETAIL SPECIFICATION SHEET

POWER DIVIDERS, 4 PORT QUADRATURE, SMA CONNECTORS

This specification is approved for use by all Departments and Agencies of the Department of Defense.

The requirements for acquiring the power dividers described herein shall consist of this specification sheet and MIL-DTL-23971.

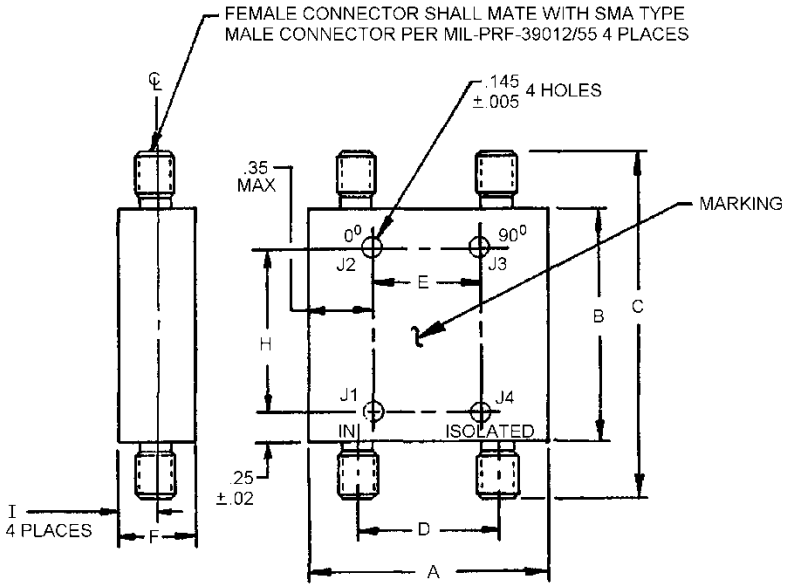

Inches	mm
.005	.13
.02	.51
.145	3.68
.25	6.35
.35	8.89

NOTES:
1. Dimensions are in inches.
2. Metric equivalents are given for general information only.

FIGURE 1. Dimensions and configuration, dash numbers 01, 02, 03, and 04.

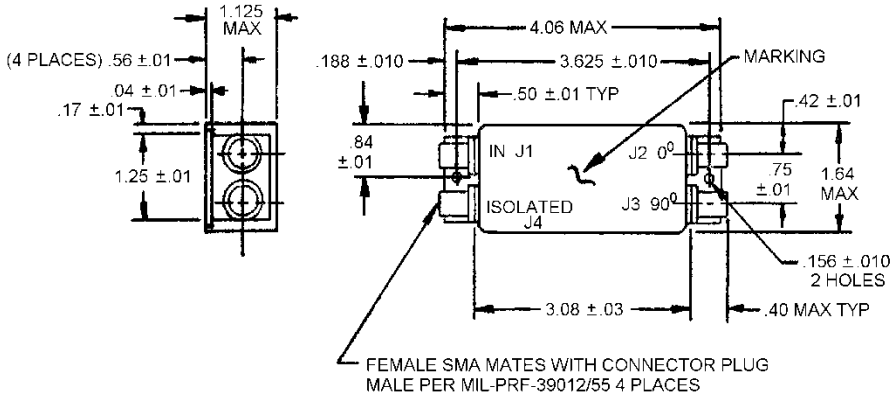

Inches	mm
.01	.3
.03	.8
.04	1.0
.010	.25
.156	3.96
.17	4.4
.188	4.77
.40	10.2
.42	10.7
.50	12.7
.56	14.2
.75	19.0
.84	21.3
1.125	28.57
1.25	31.8
1.64	41.6
3.08	78.2
3.625	92.07
4.06	103.1

NOTES:
1. Dimensions are in inches.
2. Metric equivalents are given for general information only.

FIGURE 2. Dimensions and configuration, dash number 05.

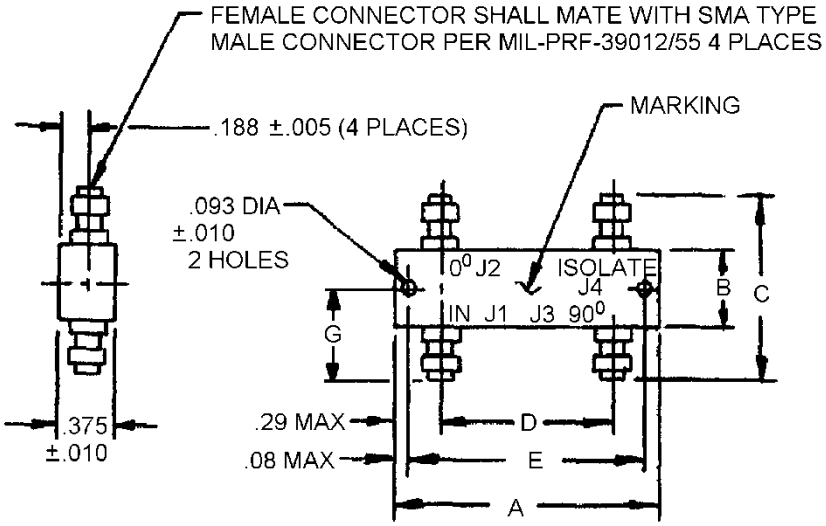

Inches	mm
.005	.1
.010	.25
.08	2.03
.093	2.36
.188	4.78
.29	7.37
.375	9.53

NOTES:
1. Dimensions are in inches.
2. Metric equivalents are given for general information only.

FIGURE 3. Dimensions and configuration, dash numbers 06, 07, 08, 09, 11, and 12.

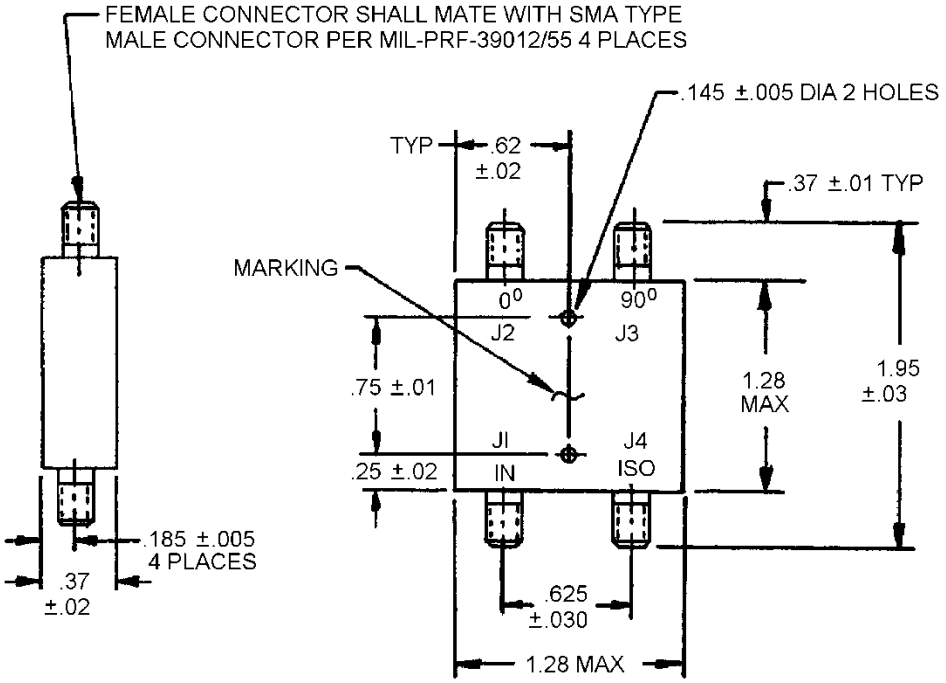

Inches	mm
.005	.1
.01	.3
.02	.5
.03	.8
.030	.76
.145	3.68
.185	4.70
.25	6.35
.37	9.40
.62	15.7
.625	15.9
.75	19.0
1.28	32.5
1.95	49.5

NOTES:
1. Dimensions are in inches.
2. Metric equivalents are given for general information only.

FIGURE 4. Dimensions and configuration, dash number 10.

TABLE I. Dimensions.

M23971/2-	A	B	C	D	E	F	G	H	I	Figure
01	4.000 ±.020	2.75 ±.02	3.500 ±.020	3.300 ±.020	1.300 ±.005	.37 ±.02	-	2.25 ±.02	.185 +.005 -.000	1
02	1.650 ±.020	1.62 ±.02	2.375 ±.020	1.000 ±.020	-	.50 ±.02	- -	1.13 ±.02	.250 +.005 -.000	1
03	1.250 ±.020	1.25 ±.02	2.000 ±.020	.630 ±.020	- -	.50 ±.02	- -	.75 ±.02	.250 +.005 -.000	1
04	1.250 ±.020	1.25 ±.02	2.000 ±.020	.630 ±.020	- -	.50 ±.02	- -	.75 ±.02	.250 +.005 -.000	1
06	3.320 max	.530 +.02	1.160 ±.020	2.710 ±.020	3.130 ±.005	-	.580 ±.020	-	-	3
07	2.582 max	.530 +.02	1.160 ±.020	1.972 ±.020	2.391 ±.005	-	.580 ±.020	-	-	3
08	1.718 max	.530 +.02	1.160 ±.020	1.105 ±.020	1.525 ±.005	-	.580 ±.020	-	-	3
09	1.160 max	.530 +.02	1.160 ±.020	.550 ±.020	.969 ±.005	-	.580 ±.020	-	-	3
11	1.108 max	.655 +.02	1.285 ±.020	.500 ±.020	.922 ±.005	- -	.642 ±.020	-	-	3
12	1.108 max	.655 +.02	1.285 ±.020	.500 ±.020	.922 ±.005	- -	.642 ±.020	- -	- -	3

NOTES:
1. Dimensions are in inches.
2. Metric equivalents are given for general information only.

Inches	mm	Inches	mm	Inches	mm
.005	.1	.75	19.0	1.650	41.9
.02	.5	.922	23.4	1.718	43.6
.020	.51	.969	24.6	1.972	50.1
.185	4.70	1.000	25.4	2.000	50.8
.250	6.35	1.105	28.0	2.25	57.1
.37	9.40	1.108	28.1	2.375	60.3
.50	12.7	1.13	28.7	2.391	60.7
.530	13.5	1.160	29.5	2.582	65.6
.550	14.0	1.250	31.7	2.710	68.8
.580	14.7	1.285	32.6	2.75	69.8
.630	16.0	1.300	33.0	3.130	79.5
.642	16.3	1.525	38.7	3.300	83.8
.655	16.6	1.62	41.1	3.320	84.3
				3.500	88.9
				4.000	101.6

REQUIREMENTS:

Design and construction: See figures 1 through 4.

Case: O-ring sealed.

Electrical characteristics: See table II.

Weight: See table II.

Ambient temperature: See table II.

Environmental requirements: See table III.

Part number: M23971/2-(dash number from table II).

TABLE II. Electrical performance characteristics and physical requirements.

M23971/2-	Impedance (ohms)	Frequency range (GHz)	Average coupling (dB)	VSWR max	Insertion loss max (dB)	Isolation min (dB)	Phase balance max 90°	Amplitude balance (dB)	Power level		Weight pounds (grams)	Ambient temperature		Figure
									avg (W)	pk (W)		Operating	Storage	
01	50	0.25 - 1.0	3. +.2 -.0	1.3:1	0.5	20	±1.5	±0.75	100	5K	.41 (187)	-54° to +71°C	-62° to +85°C	1
02	50	1.0 - 2.0	3. +.2 -.0	1.3:1	0.25	23	±1.5	±0.5	100	5K	.10 (45.4)	-54° to +71°C	-62° to +85°C	1
03	50	2.0 - 4.0	3. +.2 -.0	1.3:1	0.25	20	±1.5	±0.5	100	5K	.10 (45.4)	-54° to +71°C	-62° to +85°C	1
04	50	4.0 - 8.0	3. +.2 -.0	1.35:1	0.35	18	±1.5	±0.5	100	5K	.16 (70.9)	-54° to +71°C	-62° to +85°C	1
05	50	.02 - .200	3. +.5 -.0	1.3:1	1.3	20	±5	±1.0	1	-	-	-40° to +54°C	-40° to +54°C	2
06	50	.5 - 1.0	3. +.2 -.0	1.25:1	0.25	18	±1.5	±0.5	50	250	.14 (63.5)	-54° to +110°C	-54° to +110°C	3
07	50	1.0 - 2.0	3. +.2 -.0	1.25:1	0.25	18	±1.5	±0.5	50	250	.11 (49.9)	-54° to +110°C	-54° to +110°C	3
08	50	2.0 - 4.0	3. +.2 -.0	1.25:1	0.25	18	±2.0	±0.5	50	250	.07 (31.8)	-54° to +110°C	-54° to +110°C	3
09	50	4.0 - 8.0	3. +.2 -.0	1.25:1	0.35	18	±2.0	±0.5	50	250	.05 (22.7)	-54° to +110°C	-54° to +110°C	3
10	50	7.0 - 11.0	3. +.5 -.0	1.45:1	0.50	17	±2.0	±0.5	100	5K	.11 (49.9)	-54° to +110°C	-54° to +110°C	4
11	50	8.0 - 12.4	3. +.2 -.0	1.30:1	0.40	15	±3.0	±0.5	50	250	.06 (27.2)	-54° to +110°C	-54° to +110°C	3
12	50	12.4 - 18.0	3. +.2 -.0	1.35:1	0.50	15	±5.0	±0.5	50	250	.06 (27.2)	-54° to +110°C	-54° to +110°C	3

TABLE III. Environmental tests; In accordance with MIL-DTL-23971 except:

M23971/2-	Barometric pressure	Thermal shock	Salt spray	Explosion	Vibration	Pressurization
01, 02, 03, 04	test condition A	3/	3/	applicable	3/	3/
06, 07, 08 09, 10, 11, 12	3/	3/	test condition A	3/	test condition B	1/ 2/

1/ Pressurization: Power dividers shall be subjected to an internal gas pressure of 30 pounds per square inch for at least 20 seconds while immersed in water at approximately 20°C. During the test, there shall be no leakage, as detected by the continuous formation of escaping air bubbles. After the test, VSWR, insertion loss, isolation, phase balance, and amplitude balance tests shall be performed in accordance with appropriate test paragraphs of MIL-DTL-23971, respectively.
2/ Pressurization shall replace the barometric test.
3/ Not applicable.

TABLE IV. Supersession data.

Part number M23971/2-	Supersedes M15370/8
06	001
07	002
08	003
09	004
11	005
12	006
10	007

Referenced documents. In addition to MIL-DTL-23971, this document references the following:
MIL-PRF-39012/55

Marginal notations are not used in this revision to identify changes with respect to the previous issue due to the extent of the changes.

Custodians:
Army - CR
Navy - EC
Air Force - 85
DLA - CC

Review activities:
Navy - AS, MC, OS

Preparing activity:
DLA - CC

(Project 5985-2014-017)

NOTE: The activities listed above were interested in this document as of the date of this document. Since organizations and responsibilities can change, you should verify the currency of the information above using the ASSIST Online database at https://assist.dla.mil/.