INCH-POUND

MIL-DTL-23971/15B
16 November 2015
SUPERSEDING
MIL-DTL-23971/15A
30 August 2006

DETAIL SPECIFICATION SHEET

POWER DIVIDER/COMBINERS, N-WAY, 0 DEGREES, RECTANGULAR, PC PINS

This specification is approved for use by all Departments and Agencies of the Department of Defense.

The requirements for acquiring the product described herein shall consist of this specification sheet and MIL-DTL-23971.

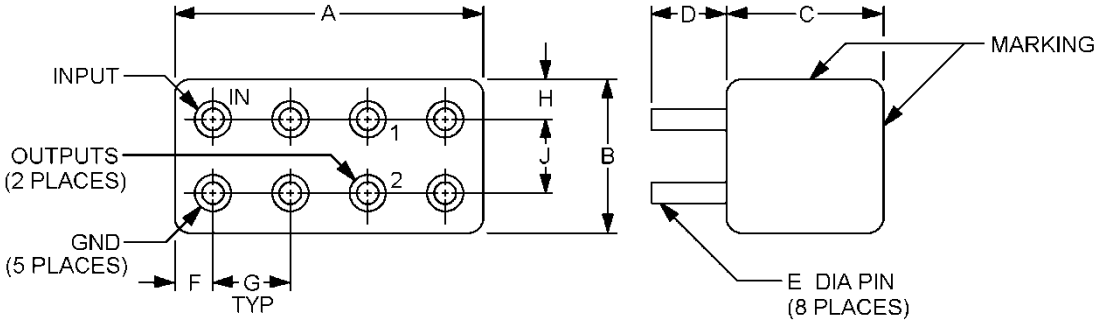

FIGURE 1. Dimensions and configurations, 2-way, dash numbers 01 and 02.

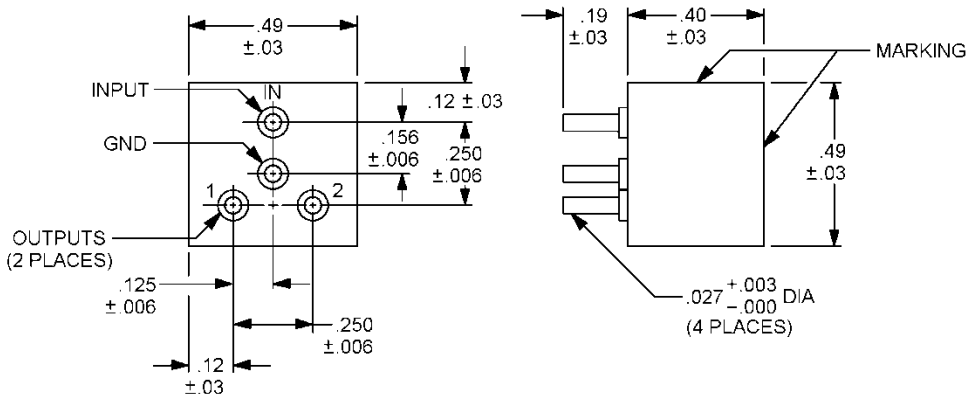

Inches	mm
.003	0.076
.006	0.15
.027	0.69
.03	0.8
.12	3.0
.125	3.18
.156	3.96
.19	4.8
.250	6.35
.40	10.2
.49	12.4

NOTES:
1. Dimensions are in inches.
2. Metric equivalents are given for general information only.

FIGURE 2. Dimensions and configurations, 2-way, dash numbers 03, 04, 05, 06, 07, and 08.

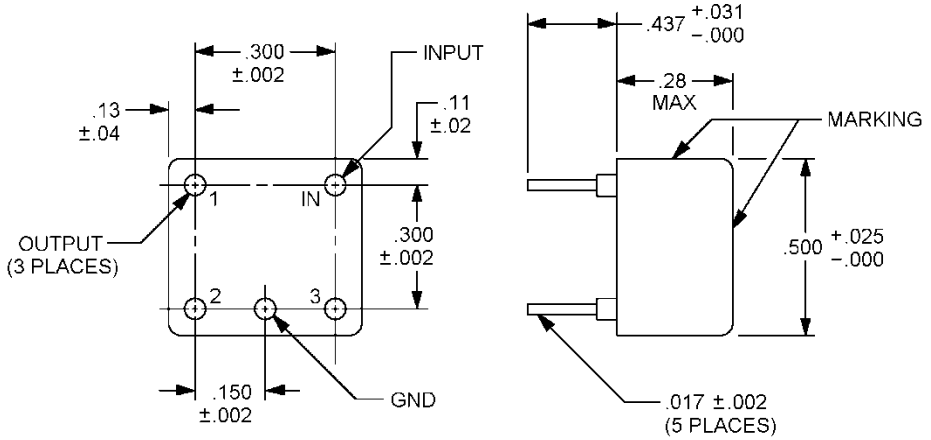

Inches	mm
.002	0.05
.017	0.43
.02	0.5
.025	0.64
.03	0.76
.04	1.0
.11	2.8
.13	3.3
.150	3.81
.300	7.62
.437	11.1

NOTES:

1. Dimensions are in inches.
2. Metric equivalents are given for general information only.

FIGURE 3. Dimensions and configurations, 3-way dash number 09.

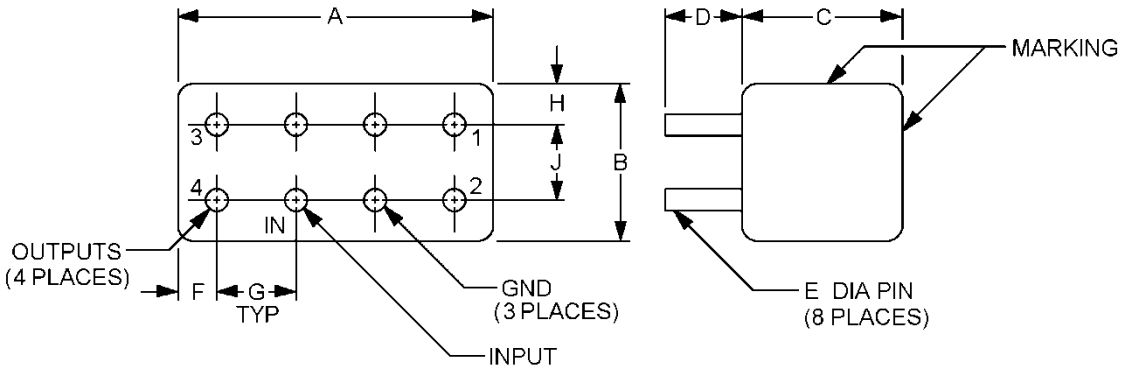

FIGURE 4. Dimensions and configurations, 4-way, dash numbers 10 and 11.

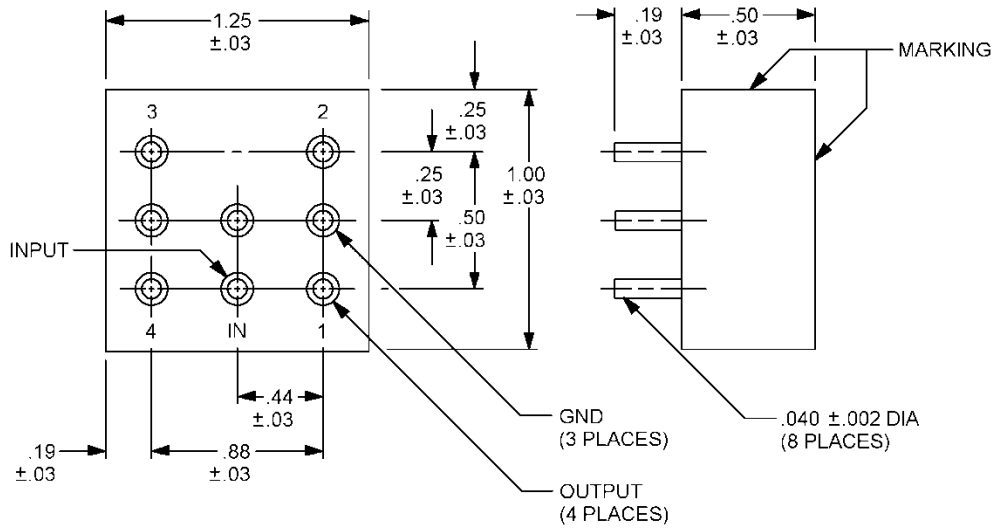

Inches	mm
.002	0.05
.03	0.8
.040	1.02
.19	4.8
.25	6.4
.44	11.2
.50	12.7
.88	22.3
1.00	25.4
1.25	31.7

NOTES:

1. Dimensions are in inches.
2. Metric equivalents are given for general information only.

FIGURE 5. Dimensions and configurations, 4-way dash number 12.

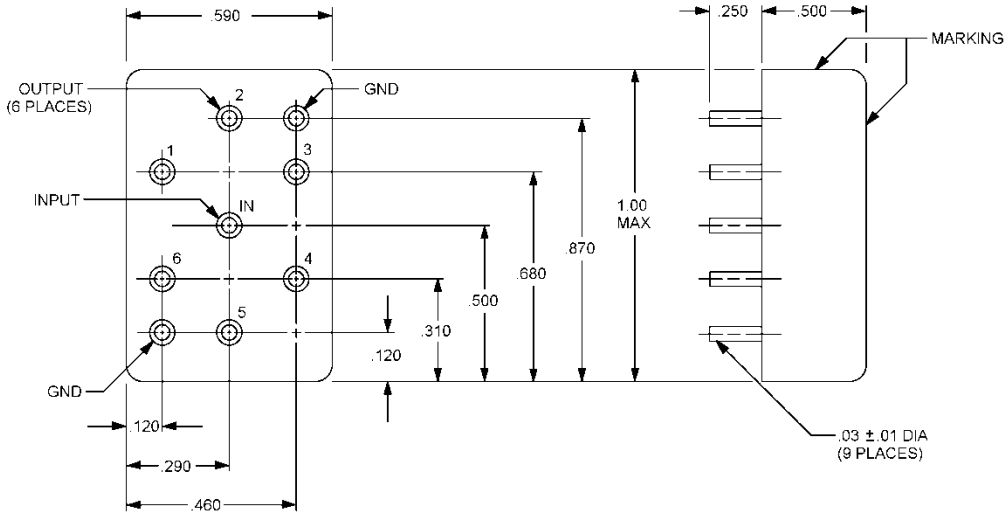

Inches	mm
.01	0.3
.03	0.8
.120	3.05
.250	6.35
.290	7.37
.310	7.87
.460	11.7
.500	12.7
.590	15.0
.680	17.3
.870	22.1
1.00	25.4

NOTES:

1. Dimensions are in inches.
2. Metric equivalents are given for general information only.
3. Unless otherwise specified, tolerance is ± .016 inch (0.41 mm).

FIGURE 6. Dimensions and configurations, 6-way, dash number 13.

TABLE I. Dimensions.

M23971/15-	A	B	C	D	E	F	G	H	J	Figure
01	.785 ±.015	.385 ±.015	.425 max	.150 +.055 -.000	.030 ±.002	.095 ±.015	.20 ±.01	.095 ±.015	.20 ±.01	1
02	.49 ±.01	.22 ±.01	.405 max	.150 +.055 -.000	.020 ±.002	.055 ±.015	.100 ±.005	.055 ±.015	.100 ±.005	1
10	.80 ±.02	.40 ±.02	.42 max	.186 +.020 -.008	.030 ±.008	.10 ±.01	.20 ±.02	.10 ±.01	.20 ±.02	4
11	.785 ±.015	.385 ±.015	.425 max	.150 +.055 -.000	.030 ±.002	.095 ±.015	.200 ±.005	.095 ±.015	.200 ±.005	4

Inches	mm	Inches	mm
.002	0.05	.150	3.81
.005	0.13	.186	4.72
.008	0.20	.200	5.08
.01	0.3	.20	5.1
.015	0.38	.22	5.6
.02	0.5	.385	9.78
.020	0.51	.40	10.2
.030	0.76	.405	10.29
.055	1.40	.425	10.79
.095	2.41	.49	12.4
.10	2.5	.785	19.94
.100	2.54	.80	20.3

NOTES:

1. Dimensions are in inches.
2. Metric equivalents are given for general information only.

REQUIREMENTS:

Design and construction: See figure 1 through figure 6. Use of a commercially available header is permitted to reduce cost.

Housing: Hermetically sealed.

Electrical characteristics: See table II.

Weight: See table II.

Ambient temperature: See table II.

Environmental tests: See table III.

Part or Identifying Number (PIN): M23971/15- (dash number from table II).

TABLE II. Electrical performance characteristics and physical requirements.

M23971/15-	Impedance (ohms)	Frequency range (MHz)	Average coupling (dB)	VSWR max	Insertion loss max (dB)	Isolation min (dB)	Phase balance max (degree)	Amplitude balance max (dB)	Power level		Weight pounds (grams)	Ambient temperature		Figure
									avg (W)	pk (W)		Operating	Storage	
01	50	0.1-0.4	---	1.2:1 typ	---	15	---	---	---	1	.004 (1.8)	-55°C to +100°C	-55°C to +100°C	1
		0.4-2.0				20								
		2.0-40				30								
		40-400				20								
		0.1-100	3.0 +0.5 -0.0		0.5	---	± 2	± 0.15						
		100-200	3.0 + 0.75 -0.0		0.75		± 3	± 0.2						
		200-400	3.0 + 1.0 -0.0		1.0		± 4	± 0.3						
02	50	0.1-0.4	---	1.2:1 typ	---	15	---	---	---	1	.004 (1.8)	-55°C to +100°C	-55°C to +100°C	1
		0.4-2.0				20								
		2.0-250				30								
		250-450				20								
		0.1-100	3.0 +0.5 -0.0			---	± 2	± 0.15						
		100-200	3.0 + 0.75 -0.0				± 3	± 0.2						
		200-450	3.0 + 1.0 -0.0				± 4	± 0.3						
		2-100	---		0.3		---	---						
		.1-250			0.4									
		250-450			0.6									
03	50	2-32	3.0 + 0.2 -0.0	1.3:1	0.5	30	± 1.0	± 0.2	---	1 3/	.016 (7.3)	-55°C to +85°C	-55°C to +85°C	2
04	50	10-100	3.0 + 0.2 -0.0	1.3:1	0.5	30	± 1.0	± 0.2	---	1 3/	.016 (7.3)	-55°C to +85°C	-55°C to +85°C	2

See footnotes at end of table.

TABLE II. Electrical performance characteristics and physical requirements - Continued.

M23971/15-	Impedance (ohms)	Frequency range (MHz)	Average coupling (dB)	VSWR max	Insertion loss max (dB)	Isolation min (dB)	Phase balance max (degree)	Amplitude balance max (dB)	Power level		Weight pounds (grams)	Ambient temperature		Figure
									avg (W)	pk (W)		Operating	Storage	
05	50	20-200	3.0 + 0.2 -0.0	1.3:1	0.5	30	± 1.0	± 0.2	---	1 3/	.016 (7.3)	-55°C to +85°C	-55°C to +85°C	2
06	50	50-1,000	3.0 + 0.2 -0.0	1.3:1	1.0	25	± 2.0	± 0.3	---	1	.016 (7.3)	-55°C to +85°C	-55°C to +85°C	2
07	50	100-300	3.0 + 0.2 -0.0	1.3:1	0.5	30	± 1.0	± 0.2	---	1 3/	.016 (7.3)	-55°C to +85°C	-55°C to +85°C	2
08	50	200-400	3.0 + 0.2 -0.0	1.3:1	0.5	30	± 1.0	± 0.2	---	1 3/	.016 (7.3)	-55°C to +85°C	-55°C to +85°C	2
09	50	140-410	4.8 + 0.3 -0.0	1.3:1	0.75	25	± 3.0	± 0.2	---	3	---	-54°C to +100°C	-54°C to +100°C	3
10	50	0.1-10	6.0 + 0.4 -0.0	1.2:1 typ	0.6	20 25 1/ 2/	± 2.0	± 0.15	---	1	.001 (0.45)	-55°C to +100°C	-55°C to +100°C	4
		10-100			0.75	30 20 1/ 2/					.011 (5.0)			
		100-200			1.0			± 0.25						

See footnotes at end of table.

TABLE II. Electrical performance characteristics and physical requirements - Continued.

M23971/15-	Impedance (ohms)	Frequency range (MHz)	Average coupling (dB)	VSWR max	Insertion loss max (dB)	Isolation min (dB)	Phase balance max (degree)	Amplitude balance max (dB)	Power level		Weight pounds (grams)	Ambient temperature		Figure
									avg (W)	pk (W)		Operating	Storage	
11	50	.25-10	6.0 + 0.7 - 0.0	1.1:1 typ	0.7	20 20 1/ 2/	± 2.0	± 0.15	---	1	.011 (5.0)	-55°C to +100°C	-55°C to +100°C	4
		10-100	6.0 + 0.75 - 0.0		0.75	30 1/		± 0.15						
		100-250	6.0 + 1.2 - 0.0		1.2	20 1/		± 0.25						
12	50	10-100	6.0 + 0.4 -0.0	1.3:1	0.7	30	± 1.0	± 0.2	---	2 3/	.040 (18)	-55°C to +100°C	-55°C to +100°C	5
13	50	235-275	7.78 + 0.60 -0.0	1.15:1	1.0	30	± 2.0	± 0.2	---	5	---	-54°C to +100°C	-54°C to +100°C	6

1/ Isolation: Between port 1 and ports 3 and 4, between port 2 and ports 3 and 4.
2/ Isolation: Between ports 1 and 2, and between ports 3 and 4.
3/ Power level: When used as a power combiner, the maximum power to each port is .5 W for coherent (equal amplitude, phase, and frequency) signals. For 180° out of phase signals, power rating is reduced to .125 W per port.

TABLE III. Environmental tests; in accordance with MIL-DTL-23971 except:

M23971/15-	Thermal shock	Terminal strength	Vibration, high frequency	Shock	Salt spray
01, 02, 11	6/	6/	Test condition D	Test condition I	6/
03, 04, 05, 07, 08	6/	6/	6/	6/	Test condition A
06	6/	6/	Test condition B	6/	6/
09	Test condition A 4/	Test condition C 1 pound load 5/	Test condition D	6/	6/
10	6/	Test condition C 1 pound load 5/	Test condition D	Test condition A	6/
12	6/	6/	Test condition B	6/	Test condition A
13	6/	6/	Test condition D	Test condition A	6/

4/ The upper temperature limit shall be 100°C.
5/ This test shall be performed in addition to terminal strength test in accordance with 4.7.13 in MIL-DTL-23971.
6/ Not applicable.

Referenced documents. This document only references MIL-DTL-23971

The margins of this specification sheet are marked with vertical lines to indicate where modifications from this revision were made. This was done as a convenience only and the Government assumes no liability whatsoever for any inaccuracies in these notations. Bidders and contractors are cautioned to evaluate the requirements of this document based on the entire content irrespective of the marginal notations.

Custodians:
Army - CR
Navy - EC
Air Force -85
DLA - CC

Review activities:
Navy - AS, MC, OS

Preparing activity:
DLA - CC

(Project 5985-2016-001)

NOTE: The activities listed above were interested in this document as of the date of this document. Since organizations and responsibilities can change, you should verify the currency of the information above using the ASSIST Online database at https://assist.dla.mil/.