INCH-POUND

MIL-DTL-23928G
w/ Amendment 1
1 September 2016

SUPERSEDING
MIL-DTL-23928G
16 January 2014

DETAIL SPECIFICATION

PANELS, ELECTRICAL, POWER DISTRIBUTION AND MANUAL TRANSFER, CIRCUIT BREAKER TYPE

This specification is approved for use by all Departments and Agencies of the Department of Defense.

1. SCOPE

1.1 Scope. This specification covers high-impact (H.I.) shockproof and vibration proof, bulkhead mounted electrical power distribution and transfer panels using ALB, NLB, AQB, and NQB circuit breakers for feeder and branch circuit protection and control for alternating current (ac) and direct current (dc) application on naval ships.

1.2 Classification. Power distribution and transfer panels covered by this specification are of the following types and classes, as specified (see 6.2).

1.3 Part or Identifying Number (PIN). The PIN will consist of the following:

M23928/1-01 WT

- Military specification
- Specification sheet number
- Dash number (see 3.1, table I)
- Enclosure type (see 3.1, table I)

Type I	-	Power distribution (branch circuit protection and control)
Type II	-	Manual transfer (bus transfer switching)
Type III	-	Combination of types I and II.

Class 1	-	Dripproof (15 degrees and 45 degrees)
Class 2	-	Totally enclosed
Class 3	-	Watertight
Class 4	-	Submersible (15 foot)

NOTE: Class 2 (Totally enclosed) is preferred over Class 1 (Dripproof).

2. APPLICABLE DOCUMENTS

2.1 General. The documents listed in this section are specified in sections 3 and 4 of this specification. This section does not include documents cited in other sections of this specification or recommended for additional information or as examples. While every effort has been made to ensure the completeness of this list, document users are cautioned that they must meet all specified requirements of documents cited in sections 3 or 4 of this specification, whether or not they are listed.

Comments, suggestions, or questions on this document should be addressed to: DLA Land and Maritime, ATTN: DLA Land and Maritime-VAT, Post Office Box 3990, Columbus, Ohio 43218-3990 or by emailed to CircuitProtect@dla.mil. Since contact information can change, you may want to verify the currency of this address information using the ASSIST Online database at https://assist.dla.mil/.

AMSC N/A

FSC 5925

2.2 Government documents.

2.2.1 Specifications, standards, and handbooks. The following specifications, standards, and handbooks form a part of this document to the extent specified herein. Unless otherwise specified, the issues of these documents are those cited in the solicitation or contract (see 6 2).

DEPARTMENT OF DEFENSE SPECIFICATIONS

MIL-PRF-900	-	Rubber Gasket Material, 45 Durometer Hardness.
MIL-S-901	-	Shock Tests, H.I. (High Impact); Shipboard Machinery, Equipment and Systems, Requirements for.
MIL-DTL-917	-	Electric Power Equipment, Basic Requirements.
MIL-DTL-1222	-	Studs, Bolts, Screws and Nuts for Applications where a High Degree of Reliability is required; General Specification for
MIL-DTL-3661	-	Lampholders, Indicator Lights, Indicator Light Housings, and Indicator Light Lenses, General Specification for.
MIL-L-3661/60	-	Lampholder, Transformer, Light, Indicator, Style LH93
MIL-L-3661/61	-	Lampholder, Lights, Indicator (Housing), Style LH94
MIL-L-3661/63	-	Lampholder, Lights, Indicator (Housing), Style LH96
MIL-L-3661/65	-	Lampholder, Lights, Indicator (Housing), Style LH98
MIL-DTL-15024	-	Plates, Tags and Bands for Identification of Equipment, General Specification For.
MIL-P-15024/5	-	Plates, Identification.
MIL-PRF-16173	-	Corrosion Preventive Compound, Solvent Cutback, Cold-Application
MIL-T-16366	-	Terminals, Electrical Lug and Conductor Splices, Crimp-Style
MIL-DTL-17361	-	Circuit Breaker Types, AQB/NQB, Air, Electric, Low Voltage, Insulated Housing, (Shipboard use), General Specification for.
MIL-C-17588	-	Circuit Breakers (Automatic -ALB-1) and Switch, Toggle (Circuit Breaker, Non-Automatic - NLB-1) Air, Insulated Housing, 125 Volts and Below, A.C. and D.C., (Naval Shipboard Use).
MIL-DTL-24643	-	Cables Electric, Low Smoke Halogen-Free, For Shipboard Use, General Specification for.
MIL-DTL-24643/15	-	Cable, Electrical, -20 Degrees C to +105 Degrees C, 1000 Volts, Type SDSGU.
MIL-DTL-24643/16	-	Cable, Electrical, -20 Degrees C to +105 Degrees C, 1000 Volts, Type LSTSGU.
MIL-I-24768	-	Insulation, Plastics, Laminated, Thermosetting, General Specification for
MIL-I-24768/1	-	Insulation, Plastic, Laminated, Thermosetting, Glass-Cloth, Melamine-Resin (GME)
MIL-I-24768/6	-	Insulation, Plastic, Laminated, Thermosetting, Glass-Mat, Polyester-Resin (GPO N-3)
MIL-T-55156	-	Terminals, Lug; Splices, Conductor; Screw Type, General Specification for

DEPARTMENT OF DEFENSE STANDARDS

MIL-STD-108	-	Definitions of and Basic Requirements for Enclosures for Electric and Electronic Equipment.
MIL-STD-167-1	-	Mechanical Vibrations of Shipboard Equipment (Type I - Environmental and Type II - Internally Excited.)
MIL-STD-810	-	Environmental Engineering Considerations and Laboratory Tests.

DEPARTMENT OF DEFENSE HANDBOOKS

MIL-HDBK-2036	-	Electronic Equipment Specifications, Preparation of.

FEDERAL SPECIFICATIONS

A-A-59781	-	Light Emitting Diodes for use as Indicator Lights

(Copies of these documents are available online at http://quicksearch.dla.mil or https://assist.dla.mil or from DLA Document Services, Building 4/D, 700 Robbins Avenue, Philadelphia, PA 19111-5094).

2.2.2 Other Government documents, drawings, and publications. The following other Government documents, drawings, and publications form a part of this document to the extent specified herein. Unless otherwise specified, the issues are those cited in the solicitation or contract.

NAVAL SEA SYSTEMS COMMAND (Ship Systems)

NAVSEA S9074-AQ-GIB-010/248	-	Requirements for Welding and Brazing Procedure and Performance Qualification.
NAVSEA S9074-AR-GIB-010/278	-	Requirements for Fabrication Welding and Inspection, and Casting Inspection and Repair for Machinery, Piping, and Pressure Vessels.

(Copies of these documents are available from http://www.navsea.navy.mil, or the Commander Naval Sea Systems Command, 1333 Isaac Hull Avenue, SE Stop 5160, Washington Navy Yard DC 20376-5160).

2.3 Non-Government publications. The following documents form a part of this document to the extent specified herein. Unless otherwise specified, the issues of these documents are those cited in the solicitation or contract (see 6.2).

AMERICAN SOCIETY FOR TESTING AND MATERIALS (ASTM)

ASTM B98/B98M	-	Copper-Silicon Alloy Rod, Bar, and Shapes.
ASTM B187/B187M	-	Copper, Bus Bar, Rod, and Shapes and General Purpose Rod, Bar and Shapes.
ASTM B371	-	Rod, Copper-Zinc-Silicon Alloy.
ASTM B411/B411M	-	Copper-Nickel-Silicon Alloy Rod and Bar.
ASTM B700	-	Standard Specification for Electrodeposited Coatings of Silver for Engineering use.
ASTM D5948	-	Compounds, Molding, Thermosetting.

(Copies of these documents are available online at http://www.astm.org or from the American Society for Testing Materials, 100 Barr Harbor Drive, West Conshohocken. PA 19428-2951).

INTERNATIONAL ORGANIZATION FOR STANDARDS (ISO)

ISO 10012	-	Measurement Management Systems - Requirements for Measurement Processes and Measuring Equipment.
ISO/IEC 17025	-	General Requirements for the Competence of Testing and Calibration Laboratories.

(Copies of this document is available online at http://www.iso.org/iso/home.html or from the American National Standards Institute (ANSI), 1899 L Street, NW, 11th Floor, Washington, DC 20036-3801).

SOCIETY OF AUTOMOTIVE ENGINEERS, INC. (SAE)

SAE AMS-QQ-S-763	-	Steel, Corrosion Resistant, Bars, Wire, Shapes, and Forgings.

(Copies of these documents are available online at http://www.sae.org/ or from the Society of Automotive Engineers, 400 Commonwealth Drive, Warrendale, PA 15096-0001.)

2.4 Order of precedence. Unless otherwise noted herein or in the contract, in the event of conflict between the text of this document and the references cited herein (expect for related specification sheets), the text of this document takes precedence. Nothing in this document, however, supersedes applicable laws and regulations unless a specific exemption has been obtained.

3. REQUIREMENTS

3.1 Specification sheets. The individual item requirements shall be as specified herein and in accordance with the applicable specification sheet. In the event of any conflict between the requirements of this specification and the specification sheet, the latter shall govern.

3.1.1 Special panels. Where panels covered by the specification sheets do not meet the needs of a given application, the requirements of this specification shall apply; the specific details, however, are covered by the contractor's drawing and the contract of order (see 6.2). In the event of any conflict between requirements of this specification, the contract drawing, or the ordering data, the order of precedence shall be:

a. Ordering data.

b. This specification.

c. Contractor's drawing.

3.2 First article. When specified, a sample shall be subjected to first article inspection (see 6.4) in accordance with 4.2.

3.3 Parts and materials. Parts and materials shall be as specified herein. When not specified, they shall be selected in accordance with MIL-DTL-917, or shall be reviewed by the contracting activity in accordance with MIL-DTL-917 (see 3.3.15).

3.3.1 Metals. Metals shall be of a corrosion-resistant type or shall be treated to resist corrosion in accordance with MIL-DTL-917. Dissimilar metals in contact with each other, shall be selected in accordance with MIL-DTL-917.

3.3.2 Nonmetallic materials. Nonmetallic materials shall be nonflammable, nontoxic, and fungus-inert in accordance with MIL-DTL-917.

3.3.3 Recycled, recovered, environmentally preferable, or biobased materials. Recycled, recovered, environmentally preferable, or biobased materials should be used to the maximum extent possible, provided that the material meets or exceeds the operational and maintenance requirements, and promotes economically advantageous life cycle costs.

3.3.4 Insulation.

3.3.4.1 Insulating material. Insulating material for bus supports, spacers, and other fabricated parts shall be type GME in accordance with MIL-I-24768/1 or type GPO-N3 in accordance with MIL-I-24768 and MIL-I-24768/6. Molded parts shall be made from molding compounds in accordance with ASTM D5948 and MIL-DTL-917. Insulating material used to obtain electrical clearance shall be not less than .125 inch (3.18 mm) thick when there is a possibility of impact or abrasion to the insulating material resulting from H.I. shock or vibration; otherwise a thickness of .0625 inch (1.59 mm) is allowable. The insulating material shall be secured by through bolting.

3.3.4.2 Insulation distances. Insulation distances in air and surface creepage distances on insulating materials for all live parts shall be in accordance with MIL-DTL-917. Panels having clearance distances for rigid construction that will break before measurable distortion can occur, shall be in accordance with MIL-DTL-917.

3.3.4.3 Distortion distance. All parts subject to distortion or movement during shock or vibration shall conform to the minimum distances shown in table I.

TABLE I. Clearance and creepage for open construction.

Maximum panel voltage	Minimum creepage and clearance distances in inches 1/ 2/			
	Clearance	Creepage		
	Between live parts of opposite polarity and live parts to ground through free air	Molded plastic surface 3/	Machined laminated plastic surfaces	
		Between live parts of opposite polarity and live parts to ground	Between live parts of opposite polarity	Live parts to ground
125 V ac/V dc	.25 (6.35)	.50 (12.70)	.75 (19.05)	.50 (12.70)
250 V ac/V dc	.50 (12.70)	.75 (19.05)	1.75 (44.45)	.75 (19.05)
600 V ac	.75 (19.05)	1.00 (25.40)	2.00 (50.80)	1.00 (25.40)

1/ Millimeters are in parentheses.
2/ Not applicable to circuit breakers or molded plastic plug-in mounting bases for circuit breakers.
3/ If molded plastic surface finish is disturbed, creepage distances for machined laminated plastic surfaces shall apply (flash removal is not considered as disturbing finishes.)

3.3.5 Circuit breakers. AQB and NQB circuit breakers shall be in accordance with MIL-DTL-17361. ALB and NLB circuit breakers shall be in accordance with MIL-C-17588. Unless otherwise specified (see 6.2), circuit breakers shall not be furnished with the panels.

3.3.5.1 Wiring connections. Wiring connections for circuit breaker attachments, such as shunt trip, undervoltage, and auxiliary switches shall be made to wiring terminal boards mounted in the panel.

3.3.5.1.1 Terminal boards. Terminal boards shall be in accordance with MIL-DTL-917.

3.3.6 Mounting bases and blocks for circuit breakers. Unless otherwise specified (see 3.1 and 6.2), mounting bases or blocks, as applicable, shall be furnished for the maximum number of breakers that may be installed in the panel.

3.3.6.1 Type ALB and NLB bases. Mounting bases for type ALB and NLB circuit breakers shall be in accordance with MIL-C-17588. The mounting bases shall be arranged to permit circuit breaker installation and removal from the front of the panel.

3.3.6.2 Type AQB and NQB bases and blocks. Mounting bases and blocks for type AQB and NQB circuit breakers shall be in accordance with MIL-DTL-17361. Mounting bases or blocks shall be arranged to permit installation and removal of circuit breakers and electrical connections from the front of the panel.

3.3.7 Indicator lights. Whenever possible, indicator lights shall be Light Emitting Diode (LED) type. If an LED type indicator light is not available for a particular application, an incandescent type indicator light may be used. LED indicator lights shall be in accordance with A-A-59781. Incandescent indicator lights shall conform to the following as applicable:

Voltage	Indicator lights Type	Specification sheet
117 volts alternating current (V ac)	LH93/3	MIL-L-3661/60
	LH94/3	MIL-L-3661/61
	LH98/3	MIL-L-3661/65
	LH93/4	MIL-L-3661/60
450 V ac	LH94/4	MIL-L-3661/61
	LH98/4	MIL-L-3661/65
120 volts direct current (V dc)	LH96/5	MIL-L-3661/63
240 V dc	LH96/6	MIL-L-3661/63

Indicator lights shall be furnished complete with lenses (globes) (see 3.3.7.1).

3.3.7.1 Lenses. The indicator light lenses shall be color coded to designate a particular application as follows:

Color	Signification
Red	Danger or emergency
Green	Normal condition
Clear, etched (white)	Power on; power available or ground detector
Blue	Circuit breaker closed
Yellow	Circuit breaker open, or abnormal condition

3.3.8 Lug terminals. When specified (see 6.2), lug terminals attached to bus bars or studs shall be type CLC in accordance with MIL-T-16366 or screw type lugs in accordance with MIL-T-55156. Single hole pad lugs shall not be used if they can turn and short (come below minimum clearance distance) when the nut loosens. When specified, the contact surfaces of lugs shall be silverplated as required herein (see 3.4.3.4.2).

3.3.9 Threads, fastening, and fastening devices. Screw threads (threads in copper, aluminum, and plastic), fastening of parts, and fastening devices shall be in accordance with MIL-DTL-917 and as specified herein.

3.3.9.1 Acceptable locking devices. The following are considered acceptable types of locking devices:

a. Self-locking nut.

b. Castellated nut with cotter pinning or safety wiring.

c. External toothed lockwasher may be used where the weight of the part does not exceed 2 ounces per screw.

d. Split ring lockwashers.

3.3.10 Gaskets. Rubber gaskets, when used, shall be in accordance with MIL-PRF-900.

3.3.11 Welding. Welding and allied processes used in fabrication shall be in accordance with NAVSEA S9074-AR-GIB-010/278 ; however, non-destructive testing of NAVSEA S9074-AR-GIB-010/278 does not apply. Commercial welding practices may be used for welding application involving aluminum alloy provided they meet the vibration and shock tests of 4.5.5 and 4.5.8.

3.3.12 Stress relief. Drawn enclosures shall be stress relieved by being uniformly heated to a temperature suitable for the material used. The welds on fabricated enclosures shall be peened to relieve stresses in accordance with NAVSEA S9074-AR-GIB-010/278.

3.3.13 Painting. Unless otherwise specified (see 6.2), painting and protection against corrosion shall be powder coating in accordance with MIL-DTL-917.

3.3.14 Identification plates, information plates, and marking. Identification and information plates shall be in accordance with types A, B, C, F, or H of MIL-DTL-15024 and MIL-P-15024/5. Plastic identification and information plates shall be light gray. Beveled edges are not required. Inscriptions or markings for all type plates shall be black, except danger, warning, and caution plates which shall have words in red for emphasis or be red with white markings. The marking format, information, and location shall be as specified herein and as specified (see 6.2). Unless otherwise specified (see 6.2), circuit plates shall not be furnished.

3.3.14.1 Manufacturer's identification plate. The manufacturer's identification plate shall be metallic only, and shall contain, as a minimum, the following information.

a. Panel type (see 1.2).

b. Manufacturer's name or trademark.

c. Contract number.

d. Specification number and classification.

e. National stock number, if assigned.

f. Date code.

3.3.14.2 Information plates. Information plats for transfer switches and their associated lights shall read NORMAL or NORM, ALTERNATE or ALT, or EMERGENCY or EMER.

3.3.15 Selection of parts and materials. All materials and parts for each panel shall be as specified herein. However, when a definite material or part is not specified, a material or part shall be used which will enable the panels to meet the requirements of this specification. Acceptance or approval of any constituent material or part shall not be construed as a guaranty of the acceptance of the finished product.

3.3.15.1 Standard parts. Military standard parts shall be used except as noted in 3.3.15.2 and 3.3.15.3 and shall be identified by their military Part or Identifying Numbers (PIN's). Any standard part, of the same PIN, shall be readily interchangeable as applied within the panel.

3.3.15.2 Nonstandard parts. Except as specified in 3.3.15.3, the use of nonstandard parts shall be reviewed by the contracting activity.

3.3.15.3 Commercial (hardware) parts. Commercial utility hardware items such as screws, bolts, and nuts may be used, provided they possess properties equivalent to and replaceable by MS or AN PIN's referenced in the parts list and on the contractor's drawings.

3.4 Construction. Panels shall be constructed in accordance with this specification and the applicable contractor's drawings.

3.4.1 Enclosures. Unless otherwise specified (see 6.2), enclosures shall be aluminum. Sheet material shall be alloy 5052. The degree of enclosure shall be as specified (see 1.2), and shall be in accordance with MIL-STD-108 and MIL-HDBK-2036.

3.4.1.1 Access door. Unless otherwise specified (see 6.2), each enclosure shall contain a door hinged on the right side facing the panel. The door shall be fastened by latches, captive thumb screws, or other fasteners with all parts captive to provide quick and easy access to the interior of the panel. Doors shall be electrically grounded to the panel framework in both the open and closed positions.

3.4.1.2 Shields. Enclosures shall be furnished with a shield to provide a completely dead front assembly. Shield cutouts for the circuit breaker handles and escutcheons shall be in accordance with MIL-C-17588 or MIL-DTL-17361, as applicable. Unused openings shall be effectively closed to afford protection equivalent to that of the used openings.

3.4.1.3 Drainage. Submersible and watertight enclosures shall be provided with a moisture drain opening at the bottom or as near the bottom as practicable. A .250 inch (6.35 mm), or larger, pipe plug shall be used to close the opening. Where panel orientation is other than as shown on the specification sheets, ordering data for special panels shall identify the panel top and bottom (see 6.2).

3.4.1.4 Cable entrance. Unless otherwise specified (see 6.2), enclosures shall have removable cable plates top and bottom. The cable plates shall be furnished blank and of adequate size to accept terminals or stuffing tubes for passage of power cables in accordance with MIL-DTL-24643, MIL-DTL-24643/15, and MIL-DTL-24643/16. The plates shall be sealed to the level of effectiveness of the enclosure.

3.4.1.5 Panel mounting. The location of mountings shall be as specified (see 3.1). The enclosure shall support the total assembly of the panel, breakers, and associated hardware by the mounting means specified. Unless otherwise specified, the diameter of the panel mounting holes shall be approximately .0625 inch (1.59 mm) larger than the bolt size indicated (see 3.1). Tolerance for placement of mounting holes shall be .015625 inch (0.40 mm).

3.4.1.6 Circuit breaker retainer device. Panels using ALB-1 or NLB-1 circuit breakers shall be provided with a retaining device to hold circuit breakers in place when the shield is removed.

3.4.2 Mechanical properties.

3.4.2.1 Size. The physical dimensions shall be as specified (see 3.1). Dimensions do not include door handles, latches, or drip shields. Unless otherwise specified (see 3.1), the tolerance for sheet metal enclosures shall be plus or minus .030 inch (0.76 mm).

3.4.2.2 Wiring size. Adequate cabling space shall be provided for power input and branch circuit cabling. These wiring spaces shall be not less than the minimum spaces as shown on figure 1.

3.4.2.3 Component spacing and arrangement. Unless otherwise specified (see 3.1), component spacing and arrangement within the panels shall conform to the following:

a. Current carrying parts shall be arranged to avoid over-heating due to inductive effects.

b. When mounting blocks are omitted, there shall be not less than .062 inch (1.57 mm) of insulation (see 3.3.4.1) between the base of a circuit breaker and the metal cabinet against which the base is mounted.

c. Panels shall be designed for circuit breaker mounting in the horizontal or vertical position. When designed for vertical mounting, the up position of the breaker handles shall be the ON position, and when designed for horizontal mounting, the ON position shall be toward the center.

d. Interlocks required for transfer panel circuit breakers, or for panels employing circuit breakers as transfer switches, shall be suitable for use with circuit breakers of a specific type, regardless of the contractor, without modification other than possible reassembly of the interlock.

3.4.3 Electrical properties.

3.4.3.1 Rating of panels. The current rating of the panel shall be based on the maximum number of breakers that may be installed times the maximum continuous ampere rating for the circuit breaker frame size, except the panel rating shall not exceed 400 amperes. The panel voltage shall be the same as the voltage rating of the largest circuit breakers installed.

3.4.3.2 Number of circuits. The number of branch circuits shall be one, or in multiples of two as specified (see 3.1), but shall not exceed 16 for 3-phase panels, or 24 for single phase panels.

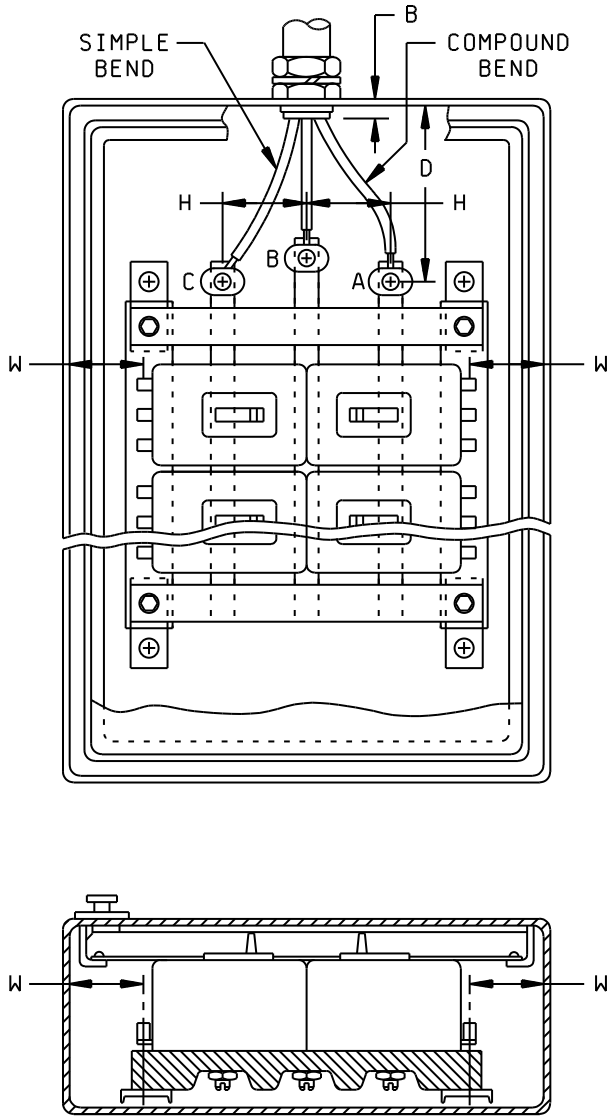

$$D = \sqrt{H(2R - H)} + B \ (Simple\ bend)$$

$$D = \sqrt{H(4R - H)} + B \ (Compound\ bend)$$

$$D = R + B \ when\ H > R$$

Legend

D = Minimum distance from enclosure wall, through which feeder cable enters, to feeder cable lugs or terminals on bus bars.

B = Allowance for feeder cable sheath protruding into enclosure.

R = Radius of bend for individual conductors of feeder cable (see table below).

H = Center to center spacing of bus bar lugs or terminals.

W = Minimum bending width of side wiring space from breaker terminals to wall of enclosure (see table below).

Table of bending dimensions R and W.

Cable circular mil size	R (min)		W (min)	
	Inches	mm	Inches	mm
2,583 - 26,250	---	---	1.5	38.1
30,860 - 52,630	2.0	50.8	2.0	50.8
60,090 - 66,370	2.5	63.5	2.5	63.5
75,780 - 84,230	3.0	76.2	3.0	76.2
99,060 - 133,100	3.5	88.9	3.5	88.9
157,600 - 211,600	4.0	101.6	4.0	101.6
250,000	4.5	114.3	---	---
300,000 - 350,000	5.0	127.0	---	---
400,000 - 500,000	6.0	152.4	---	---

FIGURE 1. Wiring space dimensions.

3.4.3.3 Polarity and phase identification.

3.4.3.3.1 Polarity. For dc, like polarities shall be similarly disposed. Facing the panel, the left-hand bus shall be negative and the right-hand bus shall be positive, upper contacts of all circuit breakers (horizontally mounted) shall be of positive polarity. Polarity identification shall be clearly marked (see 3.4.3.4).

3.4.3.3.2 Phase sequence. For ac, like phases shall be similarly disposed. Facing the front of the panel, the phase rotation shall be C, B, and A respectively, from left to right, bottom to top or from back to front. Phase identification shall be clearly marked (see 3.4.3.4).

3.4.3.3.3 Wiring diagram. When the panel contains two or more circuit breakers, circuit breakers with internal auxiliary devices, or when indicator lamps or other components are furnished, panels shall have a wiring connection diagram attached on the inside of the cover or hinged door. The diagram shall be protected and attached by means of a standard size mounting plate in accordance with MIL-HDBK-2036.

3.4.3.4 Bus bars. Rectangular copper bus bars, with rounded corners and square or round edges, hard tempered in accordance with ASTM B187/B187M, shall be used in panels furnished to this specification. Bus bars may have square edges when there are no bends. The following requirements apply:

a. Bus bar sizes shall be standardized as specified in table II. In no case shall the bus bar or connection bar sizes be smaller for a given current than the corresponding sizes specified in table II. A reduction of the ratings specified in table II shall be made if spacing between bus bars is not large enough to neglect mutual inductance between phases of interference in heat radiation.

b. Bus bars shall be clearly marked in a visible location with their polarity (plus and minus signs) or phase sequence (see 3.4.3.3.1 and 3.4.3.3.2).

c. Bus bars shall be supported firmly in place with an insulating material (see 3.3.4.1), observing creepage and clearance requirements (see 3.3.4.2). The design, number, spacing, and mounting of the bus bar supports shall be sufficient to prevent contact of live parts with each other or grounding during the short circuit and shock tests (see 4.5.4 and 4.5.8).

d. Bus bars shall extend not less than 1.75 inches (44.45 mm) beyond the outermost circuit breaker bases at the top and bottom of the panel to allow for main feeder lug terminal installation (see 3.3.8). Unless otherwise specified (see 6.2), bus bar extensions shall be left blank when lug terminals are not provided.

TABLE II. Ampere rating of rectangular bus bars and connection bars. 1/

Bus or connection bar size (inches)	Cross-sectional area (square inches)	AC ampere rating (60 and 400 Hz)	DC ampere rating
Bus bars			
1.00 x .250	.250	480	490
1.50 x .250	.375	675	685
Connection bars			
0.75 x .125	.094	250	250
1.00 x .125	.125	330	330
1.50 x .125	.188	500	500
1.50 x .1875	.281	570	580

1/ Based on 50°C ambient and 50°C rise.

3.4.3.4.1 Bus bar forming. Flat bends shall have an inside radius of not less than the thickness of the bus bar, and the ends of the bus bars shall be neatly finished. Edgewise bends of copper bars up to 2 inches in width shall be made on an inside radius of 1 inch (25.4 mm).

3.4.3.4.2 Plating. Bus bars shall be silver plated in areas of current carrying contact with lugs, terminals, bus ties and screw bolts. The plating shall be in accordance with ASTM B700, with the exception that the silver plate shall be not less than .0002 inch (.005 mm) thick. The contact surfaces of all bus bars shall be silvered up to 1 inch (25.4 mm) past the joint area. At the discretion of the contractor, the entire bus may be silver surfaced or an area around each hole may b silvered provided the silver area around the hole is not less than a .125 inch (3.18 mm) wide band. Threaded surfaces, used as electrical contact surfaces, shall have silver thicknesses of not less than .0002 inch (.005 mm).

3.4.3.4.3 Mechanical connections. Holes in the bus bars for bolting may be either punched or drilled, and the contact area shall be smoothed. Where punching is used, the operation shall not appreciably indent the surface of the bus bar in the vicinity of the hole. Slotted holes are not permitted. Contact nuts and contact spacer nuts for copper stud contacts shall be of rolled brass and shall be sized to provide the necessary area for contact surface. Contact nuts and contact spacer nuts for silvered contacts shall be silver-surfaced as specified for threaded surfaces (see 3.4.3.4.2). Before bolting, a thick film of high viscosity paste in accordance with MIL-PRF-16173 shall be applied at the joint area. Holes in bus bars for standard bolts shall have the following dimensions and the contact pressure shall be in accordance with the torques specified:

Bolt size (inch)	Hole size (inch)	Torque (foot-pounds)	
		Minimum	Maximum
.375	.4375	14	16
.500	.5625	30	33
.625	.6875	50	55

For connections made to circuit breaker studs, the following torque requirements (lubricated) shall be used:

Copper stud size	Torque (foot-pounds)	
	Minimum	Maximum
3/8-16 UNC	7	8
1/2-13 UNC	15	17
3/4-16 UNF	25	28

3.4.3.4.3.1 Bolts and nuts used in bus bar joints. Bolts and nuts used in bus bar joints shall be of the coarse thread series made of a 300 series corrosion-resistant steel (CRES) conforming to SAE AMS-QQ-S-763, silicon bronze conforming to ASTM B98/B98M, ASTM B411/B411M, or ASTM B371, or zinc plated steel conforming to MIL-DTL-1222 (a minimum of grade 2 or grade 5 depending on stress on the bolts and nuts). Flat washers of material similar to the nuts and bolts shall be used under all bolt heads and nuts adjacent to the conductors. Securing bolts shall be fitted with nuts conforming to figure 2. For typical bus bar mountings, see figure 2. Locking devices listed in 3.3.9.1 a, b, and c shall be used in bus bar joints. Bus bars may be joined by welding; however, welding shall be restricted to assemblies where disassembly will not be required for maintenance or repair of underlying assemblies. All welders and weld procedures for copper bus bars shall be qualified in accordance with NAVSEA S9074-AQ-GIB-010/248.

3.4.3.4.4 Bus separation. Busing in panels employing a combination of circuit breakers with different voltages shall be separated by metal barriers.

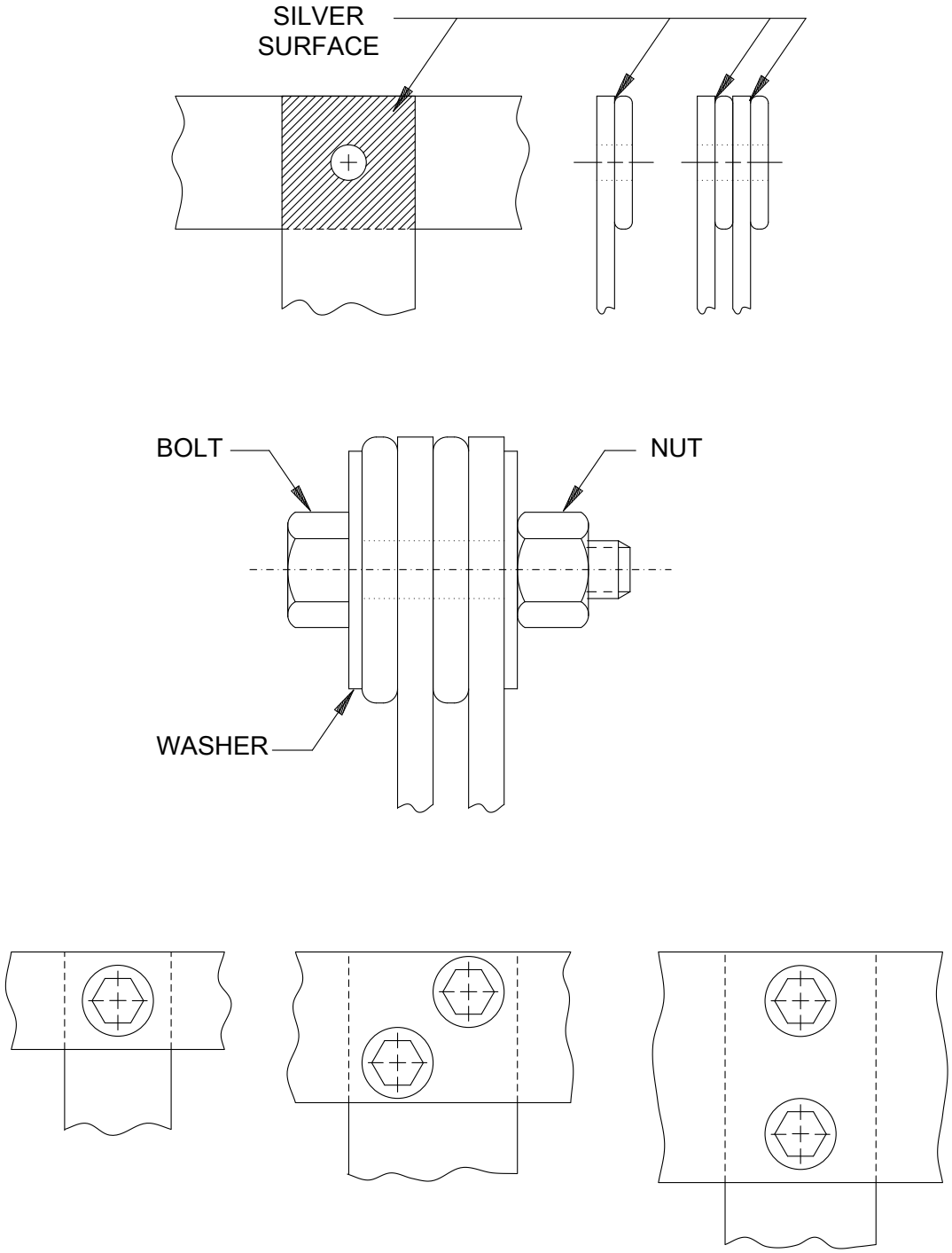

FIGURE 2. Typical arrangement for bolting of bus connections.

3.4.3.5 Electrical connections. Electrical connections to bus bars shall be secured by means of through bolts and nuts rather than by screws tapped into the bus bars except the connections may be tapped into a steel insert force-fitted into the bus bar. When a steel insert is used, the decrease in cross-section of the bus shall decrease the rated current carrying capacity of the bus (see table II).

3.4.3.6 Grounding bus or stud. When specified (see 6.2), types ALB-1 and AQB-A50 panels supplying electronic equipment shall have an equipment grounding bus or stud installed in the panel. The bus or stud shall be of a size suitable for connecting a ground conductor between the panel and the ground terminal for each electronic equipment supplied.

3.5 Performance characteristics.

3.5.1 Level of effectiveness of enclosure. The panels shall perform their designed function when tested as specified (see 4.5.2). Following the test, the panels shall pass the dielectric strength test (see 4.5.7). The watertight and submersible class panels shall show no signs of water leakage.

3.5.2 Temperature rise. Temperature rise in current carrying parts (bus bar connection points and terminals) shall be not greater than 45°C when tested as specified (see 4.5.3); the panel interior ambient temperature shall be not greater than 65°C.

3.5.3 Short circuit. The panels shall be serviceable after short circuit testing as specified (see 4.5.4). They shall show no signs of damaging distortion to bus work, holders, securing devices, and bases.

3.5.4 Vibration. The panels shall pass the type I vibration tests specified (see 4.5.5). Any of the malfunctions listed in 3.5.7 shall be cause for test failure. Following the vibration test, the panels shall pass the dielectric test as specified (see 4.5.7).

3.5.5 Salt atmosphere. When the specified application (see 6.2g) of the panels exposes them to a salt atmosphere (e.g. exposed weather deck, well deck environment), CRES or other suitable corrosion resistant construction material, meeting the requirements specified herein, shall be used. The panels shall be tested in accordance with 4.5.6 and shall show no evidence of excessive corrosion. Excessive corrosion is defined as corrosion that interferes with electrical or mechanical performance, or, in the case of plated metals, corrosion that has passed through the plating and attacked the base metal. Where corrosion-resisting treatments are used, limited superficial corrosion which would result from scratches is permitted.

3.5.6 Dielectric strength. Panels shall show no evidence of arcing (other than at test probes), corona (visible, audible, or smell), flashover, or punctured insulation when subjected to the standing voltage tests as specified (see 4.5.7). Any such indications shall be cause for test failure.

3.5.7 Shock. Panels shall be subjected to the shock tests specified (see 4.5.8). Any of the following malfunctions shall be cause for test failure:

a. Contact between live parts or between live parts and the enclosure during the test.

b. Door opens.

c. Structural parts damaged or loosened.

d. Functional parts such as breaker mounting bases and bolts damaged or loosened.

e. Circuit breakers shall not change position/state from "on" to "off", from "off" to "on", or from "on" to "trip" during the test. An "off" to "trip" position/state change is permitted.

f. Any closing of circuit breaker main and auxiliary contacts from the open position shall not be acceptable.

g. Momentary opening of circuit breaker main and auxiliary contacts shall not be in excess of 0.020 seconds during a single shock event.

h. The bus work shall not be mechanically damaged nor the bus clearance distances reduced below the minimum requirements.

i. For electronic circuit breakers, trip unit adjustable settings shall not change position.

Following the shock tests, the panel shall pass the dielectric strength test as specified (see 4.5.7).

3.6 Workmanship. The length of overhanging edges shall be kept to a minimum and all external projecting edges and sharp corners normally exposed shall be rounded. Joined parts shall fit as tightly as expected with good manufacturing practice and workmanship. The panels shall be free of cracked or displaced parts, burrs, and other defects which will affect the life, serviceability, or appearance.

4. VERIFICATION

4.1 Test equipment and inspection facilities. The manufacturer shall establish and maintain a calibration system in accordance with ISO/IEC 17025, ISO 10012, or equivalent system as approved by the qualifying activity.

4.1.1 Classification of inspections. The inspection requirements specified herein are classified as follows:

a. First article inspection (see 4.2).

b. Conformance inspection (see 4.3).

4.2 First article inspection. First article inspection shall include the examination of 4.4 and the tests of 4.5. The manufacturer shall provide verification to the procuring activity that the first article inspection has been performed on the samples supplied to the requirements of this specification. When a special panel is a modification of a standard panel, which has passed first article inspection, only those tests necessary to verify the differences need be performed.

4.2.1 Sample size. The contractor should submit one sample panel of the type, class, and composition for which the first article acceptance is sought. Acceptance will be allowed for all panel sizes of the composition submitted.

4.2.2 Failure. One or more failures of first article examination or tests shall be cause for rejection.

4.3 Conformance inspection. Conformance inspection shall consist of the examination and tests of table III.

TABLE III. Conformance inspection.

Inspection	Requirement	Test method
General examination	3.3, 3.4, 3.5, and 3.6	4.4
Effectiveness of enclosure 1/	3.5.1	4.5.2
Dielectric strength	3.5.6	4.5.7

1/ Watertight and submersible only.

4.3.1 Inspection lot. Equipment of the same type, class, and composition offered for delivery at one time is considered a lot for purposes of conformance examination and testing.

4.3.2 Sampling. Equipment selected in accordance with table IV should be subjected to the conformance examination and tests. Failure to conform to the requirements for this specification for any test will be counted as a defect and the equipment rejected. When the number of such nonconforming equipment, in any sample, exceeds the acceptance number for that sample, the lot represented by the sample will be rejected.

4.3.3 Rejected lots. When an inspection lot is rejected, the contractor may replace it with a new lot, rework it to correct defects, or screen out the defective units, and again inspect it. Such lots should be sampled in accordance with tightened inspection sample sizes specified in table IV. Reinspected lots should be kept separate from new lots and shall be clearly identified as reinspected lots. Acceptance criteria apply as specified (see 4.3.2).

TABLE IV. Sampling for conformance.

Number of panels in inspection lot	Sample size		Acceptance number	Rejection number
	Normal inspection	Tightened inspection		
2 to 10	All	All	---	---
11 to 15	10	12	0	1
16 to 25	13	15	0	1
26 to 40	17	19	0	1
41 to 65	22	24	0	1
66 to 110	28	31	1	2
111 to 180	35	39	1	2
181 to 300	45	49	2	3
301 to 500	55	60	2	3
501 and over	70	75	3	4

4.4 General examination. Sample equipment shall be subjected to a thorough examination to ascertain that the material, workmanship, and construction are in conformance with this specification. The fit of parts shall be observed with particular reference to the interchangeability of such parts as are likely to require replacement during the normal service life of the equipment and potential malfunctions due to cumulative misalignment of parts. Specific observation shall be given to the features specified in 3.6 and to the following:

a. Dimensions.

b. Creepage and clearance distances.

c. Alignment of parts. Bolts and screws shall be loosened and tolerances and misalignment of parts checked.

d. Fit and freedom of operation of circuit breakers.

4.5 Methods of examination and test.

4.5.1 Test conditions. Unless otherwise specified (see 6.2), tests shall be performed under standard ambient test conditions in accordance with MIL-STD-810.

4.5.1.1 Preparation for test. Preparation for first article inspection tests (see 4.2), which include shock and vibration, shall consist of installing the maximum number of circuit breakers or a combination of circuit breakers and simulated components of the type specified in each panel to be tested. When only circuit breakers are installed, NLB or NQB types may be used in lieu of ALB or AQB. When simulated components are used, there shall be one circuit breaker installed for every four installed simulated components. The simulated components shall be comparable in size and weight to the type circuit breakers replaced and the method of mounting shall be similar to that used for the actual circuit breakers.

4.5.2 Effectiveness of enclosure. Samples shall be tested in accordance with MIL-STD-108 to determine the effectiveness of enclosure (see 3.5.1).

4.5.3 Temperature rise. The sample shall be subjected to heat testing. The heat testing shall be conducted under simulated conditions equivalent to normal operating conditions employing maximum rated voltage, maximum rated load, and rated frequency. Thermocouples (or equivalent temperature sensors) shall be installed on selected bus bar connection points and terminals to determine maximum temperatures of current carrying parts. Similar sensors shall be installed approximately 2 inches (50.80 mm) from the top and bottom of the panel to measure the ambient temperature rise. The heat run shall be conducted continuously until the measured temperatures have remained constant for 2 hours. Temperature rise shall not exceed the values specified (see 3.5.2).

4.5.4 Short circuit. Samples shall be subjected to short circuit testing to values of short circuit current of 100,000 amperes for AQB panels and 50,000 amperes for ALB panels (average of the maximum root mean square (rms) asymmetrical of the three phases). The source shall be initially at the rated voltage of the panel to be tested (see 3.5.3). The short circuit tests shall be conducted to determine that the structural arrangements provide adequate bracing under short circuit conditions, and if the electrical clearance distances employed within the panel design are adequate under conditions where ionized gases are emitted from the circuit breakers. The circuit shall consist of an AQB-LF400 back-up circuit breaker, and AQB or ALB panel with circuit breakers, and a short circuiting breaker on the load side of one of the panel breakers. The test circuit shall have a power factor not greater than 15 percent (X/R ration 6.6 or greater) with X and R in series connection. During the test, the AQB of ALB panel breaker shall be closed, then the AQB LF400 back-up breaker, and finally the short circuiting breaker. It is permissible for the AQB and ALB circuit breaker subjected to more than its interrupting capacity to sustain damage during this test, but there shall be no damage to the panel or circuit breaker mounting foundation.

4.5.5 Vibration. The sample panel shall be energized and subjected to type I vibration tests up to and including the frequency range of 33 hertz (Hz) in accordance with MIL-STD-167-1. One-half of the installed circuit breakers shall be closed, the remaining breakers shall be in the open position. An oscillograph shall be used to check the closed breakers for excessive contact bounce and to check the open breakers for momentary closures. Panel mounting shall be as specified for bulkhead mounted equipment in accordance with MIL-STD-167-1. The use of resilient mounting shall not be permitted. Acceptability criteria shall be as specified (see 3.5.4).

4.5.6 Salt atmosphere. When specified by the application of the panels (see 6.2g and 3.5.5), the sample shall be subjected to a salt fog test in accordance with MIL-STD-810. The equipment shall not be energized during the test. Upon completion, the sample shall be inspected for compliance with the requirements of 3.5.5.

4.5.7 Dielectric strength. Each sample shall be subjected to dielectric testing (see 3.5.6). The sample shall be subjected for 1 minute to a dielectric test voltage, the effective potential of which is twice the panel rated voltage plus 1,000 volts (except low voltage panels such as 24-30 volts for which twice rated voltage plus 500 volts is applicable), applied between points of opposite polarity and between live parts and ground. The frequency of the voltage shall be 60 Hz rms ac and shall approximate a true sine wave.

4.5.8 Shock. The sample shall be subjected to H.I. shock tests in accordance with MIL-S-901 for grade A, class I lightweight, type A equipment (see 3.5.7). One half of the installed circuit breakers shall be closed, the remaining breakers shall be in the open position. Main and auxiliary contacts shall be monitored by oscillograph, FM tape recorder, or suitable digital data acquisition system. All equipment shall have a minimum frequency response and sampling rate of 2 KHz. Digital signal processing of acquired data shall be capable of producing suitable waveform plots with 0.5 millisecond minimum resolution, and for analysis purposes shall be able to expand contact events with graphical editing to determine time increments of the individual sample points. Monitoring shall include all main contacts and, if applicable, at least one normally open and one normally closed auxiliary contact. Panel mounting shall be in accordance with test fixture 4A of MIL-S-901. Fuses (or other indicators which provide a lasting indication) shall be connected so to detect any momentary short in between live parts or live parts and ground. The test shall be conducted with all equipment and cables in the panel energized with no load. The sample being tested shall not be reconditioned or adjusted during the testing. The panel being tested shall be considered as failing the test if functional or structural parts are loosened or damage is evident (see 3.5.7).

4.5.9 Interlock bars. The sample shall be subjected to tests of the interlock bars to demonstrate proper function and alignment of parts. The bars shall properly permit both circuit breakers to be open or only one to be closed with a minimum time delay of 2.5 seconds from initiating the trip of one circuit breaker before the second breaker can be closed. Improper operation occurs when the bars permit two circuits to be closed simultaneously causing short circuits between isolated generators. The tests shall demonstrate and verify the following:

a. The proper interlock bar is installed in relation to the orientation of the circuit breakers.

b. The interlock bar is properly aligned with the circuit breaker handles. This shall be checked after the interlock bar and circuit breaker face plate are removed and reassembled.

c. The proper fit of parts exists by attempting purposeful misalignment; loosen hardware and ascertain if interlock bars and face plates can be held out of tolerance when bolts are retightened (see 4.5).

5. PACKAGING

5.1 Packaging. For acquisition purposes, the packaging requirements shall be as specified in the contract or order (see 6.2). When packaging of materiel is to be performed by DoD or in-house contractor personnel, these personnel need to contact the responsible packaging activity to ascertain packaging requirements. Packaging requirements are maintained by the Inventory Control Point's packaging activities within the Military Service or Defense Agency, or within the military service's system commands. Packaging data retrieval is available from the managing Military Department's or Defense Agency's automated packaging files, CD-ROM products, or by contacting the responsible packaging activity.

6. NOTES

(This section contains information of a general or explanatory nature that may be helpful, but is not mandatory.)

6.1 Intended use. The panels are intended to be used for power and lighting distribution on ships where conditions of mechanical shock and salty atmosphere are encountered.

6.2 Acquisition requirements. Acquisition documents should specify the following:

a. Title, number, and date of the specification.

b. ASSIST Online database should be cited in the solicitation, and if required, the specific issue of individual documents referenced. If not otherwise specified, the versions of the individual documents referenced will be those in effect on the date of release of the solicitation (see 2.).

c. Packaging requirements (see 5.1).

d. Title, number, and date of applicable specification sheet and applicable dash numbers (see 3.1).

e. Types and classes required (see 1.2).

f. Details of the variations from the specification for special panels (see 3.1.1).

g. Specify testing in accordance with 4.5.6 if application is in a salt atmosphere.

h. If circuit breakers are to be furnished with panels (see 3.3.5).

i. Type of circuit breaker bases or blocks required (see 3.3.6).

j. Size of lugs, if required (see 3.3.8).

k. Painting, if other than specified (see 3.3.13).

l. Marking format, information, and location (see 3.3.14).

m. If circuit information plates are required (see 3.3.14).

n. Enclosure material if other than aluminum (see 3.4.1).

o. If door is not required (see 3.4.1.1).

p. Location of door hinge if other than right side (see 3.4.1.1).

q. Identify panel top and bottom if required for special panels (see 3.4.1.3).

r. If cable plates are not required (see 3.4.1.4).

s. Size and location of holes in bus bar extensions if required (see 3.4.3.4).

t. Grounding bus or stud if required (see 3.4.3.6).

u. Inspection conditions if other than specified (see 4.5.1).

6.3 First article. When first article inspection is required, the contracting officer should provide specific guidance to offerors whether the item(s) should be a preproduction sample, a first article sample, a first production item, a sample selected from the first production items, a standard production item from the contractor's current inventory (see 3.2), and the number of items to be tested as specified in 4.3. The contracting officer should also include specific instruction in acquisition documents regarding arrangements for examinations, approval of first article test results, and disposition of first articles. Invitations for bids should provide that the Government reserves the right to waive the requirement for samples for first article inspection to those bidders offering a product which has been previously acquired or tested by the Government, and that bidders offering such products, who wish to rely on such production or test, must furnish evidence with the bid that prior Government approval is presently appropriate for the pending contract. Bidders should not submit alternate bids unless specifically requested to do so in the solicitation.

6.4 Definitions.

6.4.1 Standard panels. Standard panels are panels that are completely defined by a specification sheet (see 3.1).

6.42 Special panels. Special panels are panels that conform to the requirements of this specification but do not conform to all the detail requirements of the specification sheets (see 3.1).

6.5 Subject term (key word) listing.

Branch circuit protection
Bus bar
Bus transfer switching
Creepage and clearance distance
Enclosure

6.6 Amendment notations. The margins of this specification are marked with vertical lines to indicate modifications generated by this amendment. This was done as a convenience only and the Government assumes no liability whatsoever for any inaccuracies in these notations. Bidders and contractors are cautioned to evaluate the requirements of this document based on the entire content irrespective of the marginal notations.

Custodians:
Navy - SH
DLA - CC

Preparing activity:
DLA - CC

(Project 5925-2016-003)

NOTE: the activities listed above were interested in this document as of the date of this document. Since organizations and responsibilities can change, you should verify the currency of the information above using the ASSIST Online database at https://assist.dla.mil.